SONY

SP01363

DME SWITCHER

DFS-300
DFS-300MF
DFS-300P
DFS-300PMF
DFS-500
DFS-500MF
DFS-500P
DFS-500PMF

DIGITAL CHROMAKEYER

DCK-500
DCK-500P

PROTOCOL MANUAL

REMOTE (9pin) CONNECTOR

1st Edition

このマニュアルに記載されている事柄の著作権は当社にあり，説明内容は機器購入者の使用を目的としています。
従って，当社の許可なしに無断で複写したり，説明内容（操作，保守等）と異なる目的で本マニュアルを使用することを禁止します。

The material contained in this manual consists of information that is the property of Sony Corporation and is intended solely for use by the purchasers of the equipment described in this manual.
Sony Corporation expressly prohibits the duplication of any portion of this manual or the use thereof for any purpose other than the operation or maintenance of the equipment described in this manual without the express written permission of Sony Corporation.

Le matériel contenu dans ce manuel consiste en informations qui sont la propriété de Sony Corporation et sont destinées exclusivement à l'usage des acquéreurs de l'équipement décrit dans ce manuel.
Sony Corporation interdit formellement la copie de quelque partie que ce soit de ce manuel ou son emploi pour tout autre but que des opérations ou entretiens de l'équipement à moins d'une permission écrite de Sony Corporation.

Das in dieser Anleitung enthaltene Material besteht aus Informationen, die Eigentum der Sony Corporation sind, und ausschließlich zum Gebrauch durch den Käufer der in dieser Anleitung beschriebenen Ausrüstung bestimmt sind.
Die Sony Corporation untersagt ausdrücklich die Vervielfältigung jeglicher Teile dieser Anleitung oder den Gebrauch derselben für irgendeinen anderen Zweck als die Bedienung oder Wartung der in dieser Anleitung beschriebenen Ausrüstung ohne ausdrückliche schriftliche Erlaubnis der Sony Corporation.

TABLE OF CONTENTS

OUTLINE 1

1. SERIAL DATA CONFIGURATION 1
   1-1.COMMUNICATION SYSTEM 1
   1-2. COMMAND CONFIGURATION 1
   1-3. CONNECTION 2

2.COMMAND DESCRIPTION 3
   2-1.VIEWING THE TABLE 3
   2-2.CROSS POINT 4
   2-3.TRANSITION 5
      2-3-1.Transition Mode Selection 5
      2-3-2.Transition Type 5
      2-3-3.Auto Transition Start 6
      2-3-4.All Stop 7
   2-4.DSK ON/OFF 7
   2-5.WIPE. 8
      2-5-1.Wipe Pattern 8
      2-5-2.Direction 8
   2-6.FREEZE CONTROL 9
   2-7.SNAP SHOT REGISTER 10
      2-7-1.Configuration of Snap Shot Register 10
      2-7-2.Learn 10
      2-7-3.Recall 10
      2-7-4.Register Read 11
      2-7-5.Register Write 12
      2-7-6.Group Read 13

OUTLINE

The communication specifications when the DME switcher DFS-300 and DFS-500 series and the digital chroma keyer DCK-500/P (abbreviated as DFS and DCK hereafter) are controlled from an editing controller and computer (abbreviated as controller hereafter) via a 9-pin editor terminal are described below.

The communication protocol of the DFS series conforms to the Sony switcher protocol. However, this communication protocol does not support all the commands defined by the Sony switcher protocol. The commands that DFS supports and their application are explained next.

1. SERIAL DATA CONFIGURATION

1-1. COMMUNICATION SYSTEM

D-Sub 9-pin
Conforms to RS-422A.
Synchronous system: Start-stop
Baud rate: 38400
Character length: 8 bits
Parity: Odd
Stop bit: 1

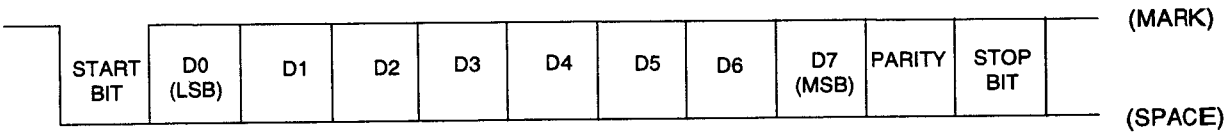

1 START BIT + 8 DATA BITs + 1 PARITY BIT + 1 STOP BIT
Odd Parity: The total of D0 to D7 and parity 1 is odd.

1-2. COMMAND CONFIGURATION

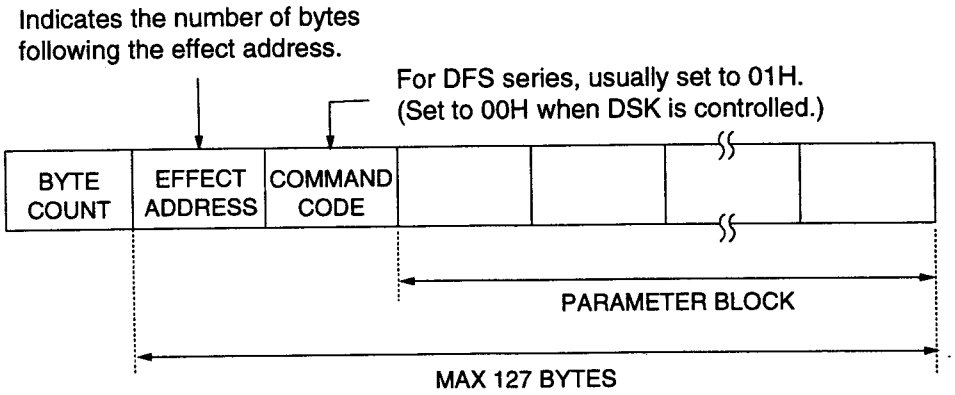

1-3. CONNECTION

EDITOR CONNECTOR

D-SUB 9pin (Female)

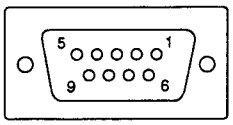

External View

Pin No.	Signal name	Function
1	GND	Frame Ground
2	XMIT-	Transmit "A"
3	RCV+	Receive "B"
4	GND	Receive Common
5	NOT USED	Space
6	GND	Transmit Common
7	XMIT+	Transmit "B"
8	RCV-	Receive "A"
9	GND	Frame Ground

"A" and "B" are defined as shown below.

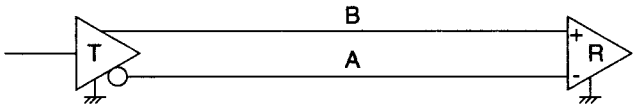

A < B → "1" (MARK)
A > B → "0" (SPACE)

T : Transmit

R : Receive

2. COMMAND DESCRIPTION

The commands when the DFS-300 and DFS-500 series, and DCK-500 and DCK-500P (abbreviated as DFS and DCK hereafter) are controlled using a 9-pin editor terminal are described below.

The commands below are enabled for the following setting.
DFS-500 series: Set the editor select switch on the SY-172 board to BVE-900.
DFS-300 series: Set the editor select switch on the SY-199 board to PVE-500.
DCK-500/500P: No setting is required.

A return code (ACK) is returned within 10 ms if a command is properly received when it is entered.
Return code (ACK)

- byte0

8 4	(R)

However, a return parameter (REGISTER READ or GROUP TALLY) is returned when a REGISTER READ command and GROUP READ command are sent.

To interrupt the effect, enter an ALL STOP command.

- Command 1: ALL STOP (EFFECT TRASITION)

byte0	byte1	byte2	byte3	
03	01	97	01	(W)

- Command 2: ALL STOP (DSK TRASITION)

byte0	byte1	byte2	byte3	
03	00	97	02	(W)

2-1. VIEWING THE TABLE

Example

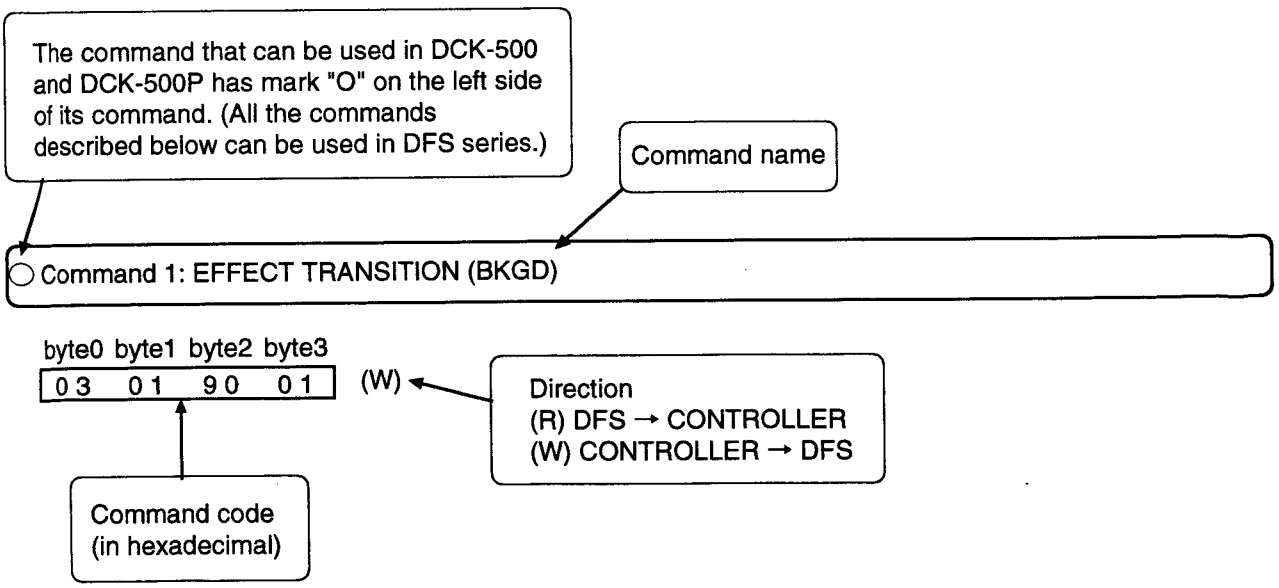

2-2.CROSS POINT

○ Command 1: BKGD A (PGM) BUS

byte0 byte1 byte2 byte3

03	01	80	XX

(W)

Byte 3 (XX) status

0 1 : Video Input 1
0 2 : Video Input 2
0 3 : Video Input 3
0 4 : Video Input 4
Others : Internal Video

○ Command 2: BKGD B (PST) BUS

byte0 byte1 byte2 byte3

03	01	81	XX

(W)

Byte 3 (X X) status

0 1 : Video Input 1
0 2 : Video Input 2
0 3 : Video Input 3
0 4 : Video Input 4
Others: Internal Video

Function : Selects the bus.
Command 1: Selects the cross point of a BKGD bus.
Command 2: Selects the cross point of an FRGD bus.

Return code : ACK

byte0

84

(R)

2-3.TRANSITION

2-3-1.Transition Mode Selection

○ Command 1: EFFECT TRANSITION (BKGD)

byte0	byte1	byte2	byte3	
03	01	90	01	(W)

Command 2: DSK TRANSITION

byte0	byte1	byte2	byte3	
03	00	90	02	(W)

Function : Specifies the effect transition or DSK transition.

2-3-2.Transition Type

○ Command: TRANSITION TYPE

byte0	byte1	byte2	byte3	
03	01	91	XX	(W)

Byte 3 (XX) status
02 : Mix
04: Wipe

Function : Selects the effect type.
Remarks : The execution timing of Auto Transition Start varies depending on the effect type as shown below.

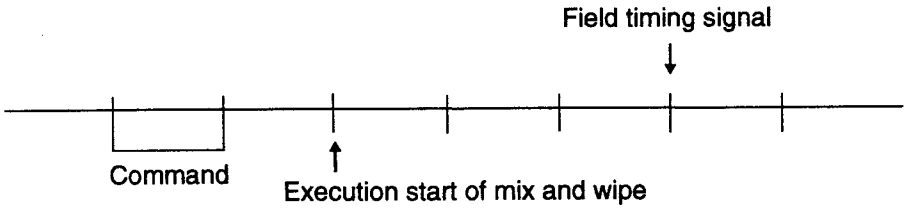

Return Code : ACK

byte0	
84	(R)

2-3-3.Auto Transition Start

○ Command 1: AUTO TRANSITION START (EFFECT)

byte0	byte1	byte2	byte3	byte4	
04	01	96	XX	YY	(W)

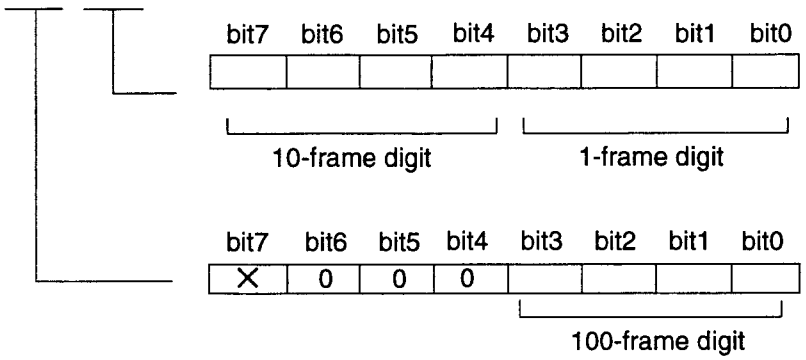

Byte 3(XX) and byte 4(YY) represent the transition time in units of frames (decimal).

Command 2: AUTO TRANSITION START (DSK)

byte0	byte1	byte2	byte3	byte4	
04	00	96	XX	YY	(W)

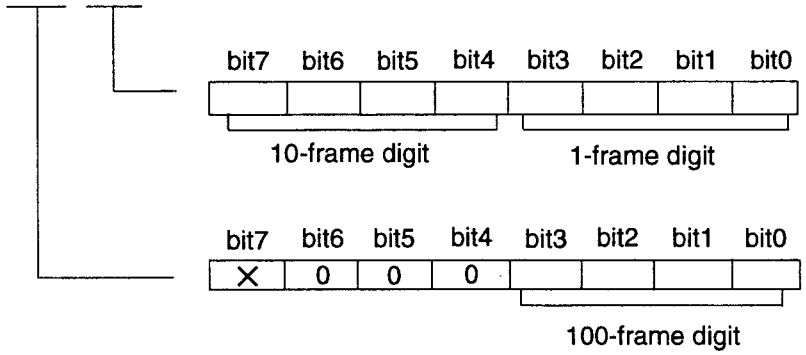

Byte 3(XX) and byte 4(YY) represent the transition time in units of frames (decimal).

Function : Transition start
Remarks : The execution timing of DSK is as shown below.

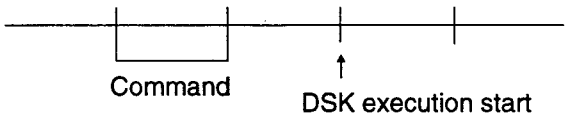

Return code : ACK

byte0	
84	(R)

2-3-4.All Stop

○ Command 1: ALL STOP (EFFECT TRANSITION)

byte0	byte1	byte2	byte3	
03	01	97	01	(W)

Command 2: ALL STOP (DSK TRANSITION)

byte0	byte1	byte2	byte3	
03	00	97	02	(W)

Function : Stops the effect in execution.

2-4.DSK ON/OFF

Command1: DSK ON

byte0	byte1	byte2	byte3	
03	00	DA	10	(W)

Command 2: DSK OFF

byte0	byte1	byte2	byte3	
03	00	9A	10	(W)

Function : Turns on and off DSK.

2-5.WIPE

2-5-1.Wipe Pattern

○ Command: WIPE PATTERN

byte0	byte1	byte2	byte3	byte4	byte5	
05	01	9B	00	XX	YY	(W)

- YY: 1's digit
- XX: 10's digit
- 00: 100's digit
- 9B: 1000's digit

Byte 4(XX) and byte 5(YY) represent the pattern number in decimal.
(Example)
The pattern number of Mix is 1080, and that of Cut is 1059.

Function : Sets the wipe pattern.
Various effects can be set (including the 3D effect) by entering the pattern number.
Return code : ACK

byte0	
84	(R)

2-5-2.Direction

Command: DIRECTION

byte0	byte1	byte2	byte3	byte4	
04	01	9B	04	XX	(W)

Byte 4 (XX) status
02: Normal
04: Reverse

Function : Sets the wipe direction.
Return code : ACK

byte0	
84	(R)

2-6.FREEZE CONTROL

○ Command 1: FREEZE ON

byte0	byte1	byte2	byte3	
03	14	80	00	(W)

Command 2: FREEZE OFF

byte0	byte1	byte2	byte3	
03	14	80	01	(W)

Function : Sets the field freeze or frame freeze on the control panel to ON in advance. The freeze operation of a BKGD image can be turned on and off irrespective of the effect execution when the next command is sent from a 9-pin connector.

Remarks : (For DFS-500 series)
Pattern number 9973 is set using the PATTERN/KEY PAD button on the control panel. After that, the freeze operation of an FRGD image can be controlled using the above command only when the effect of an animation type is set. To return a BKGD image to the freeze mode, enter pattern number 9971. During the power-on sequence and power reset, the system is initialized so that the BKGD image is frozen.

(For DFS-300 series)
Basically, same as the DFS-500 series.
In the DFS-300 series, the BKGD freeze and FRGD freeze can be selected by the pattern number described above or the setup menu. (For more details of the setup menu, refer to the Additional Functions of the DFS-300/300P (Operating Instructions.)

2-7. SNAP SHOT REGISTER

2-7-1. Configuration of Snap Shot Register

The DME switcher of DFS series has 100 snap shot registers of Nos. 00 to 99 (20 snap shot registers of Nos. 0 to 19 for DCK-500 and DCK-500P). One snap shot register consists of 16 groups. The number and size of groups used vary depending on the switcher model or the type of a parameter memorized in the snap shot. In this case, 16 groups are not all used. (In the DFS series, groups 1 and 2 or groups 1 to 4 are used.)

To upload or download the contents of the snap shot register in DFS and DCK to the controller, transfer data in units of this group. Therefore, the controller first issues a GROUP READ command to the DFS and DCK, views the contents of the group tally from the DFS and DCK, and specifies a valid group number so as to read the contents of snap shot data. To fetch the contents of the snap shot register that uses four groups (groups 1 to 4), the contents are read four times for each group.

2-7-2.Learn

Command: LEARN

byte0	byte1	byte2	byte3	byte4	
04	21	80	02	XX	(W)

XX = 00 to 63

Byte 4(XX) represents the snap shot number in hexadecimal.

Function : Registers the snap shot.

2-7-3.Recall

○ Command: RECALL

byte0	byte1	byte2	byte3	byte4	
04	21	90	02	XX	(W)

XX = 00 to 63

Byte 4(XX) represents the snap shot number in hexadecimal.

Function : Calls the snap shot.

2-7-4.Register Read

○Command: REGISTER READ

byte0	byte1	byte2	byte3	byte4	byte5	
05	21	20	02	XX	YY	(W)

bit7	bit6	bit5	bit4	bit3	bit2	bit1	bit0
X	X	X					

Displays the group numbers (01 to 16) in hexadecimal.

For effect number < 9000: YY = 01 to 02 (decimal)
For effect number ≧ 9000: YY = 01 to 04 (decimal)
Groups 3 and 4 are user program data.

X X = 00 to 63

byte4(X X) represents the snap shot number in hexadecimal.

Function : Reads the contents of the snap shot register.
DFS or DCK returns the return parameter (REGISTER WRITE) when a REGISTER READ command (the snap shot number is specified by byte4 and the group number is specified by byte5) is issued to DFS or DCK.

Return parameter : REGISTER WRITE

byte0	byte1	byte2	byte3	byte4	byte5	byte6	byte65	
41	21	A0	02	XX	YY	aa	bb	(R)

Displays the contents of the group in 60 bytes.

The contents of byte4 (XX) and byte5(YY) are the same as a REGISTER READ command.

2-7-5.Register Write

○ Command : REGISTER WRITE

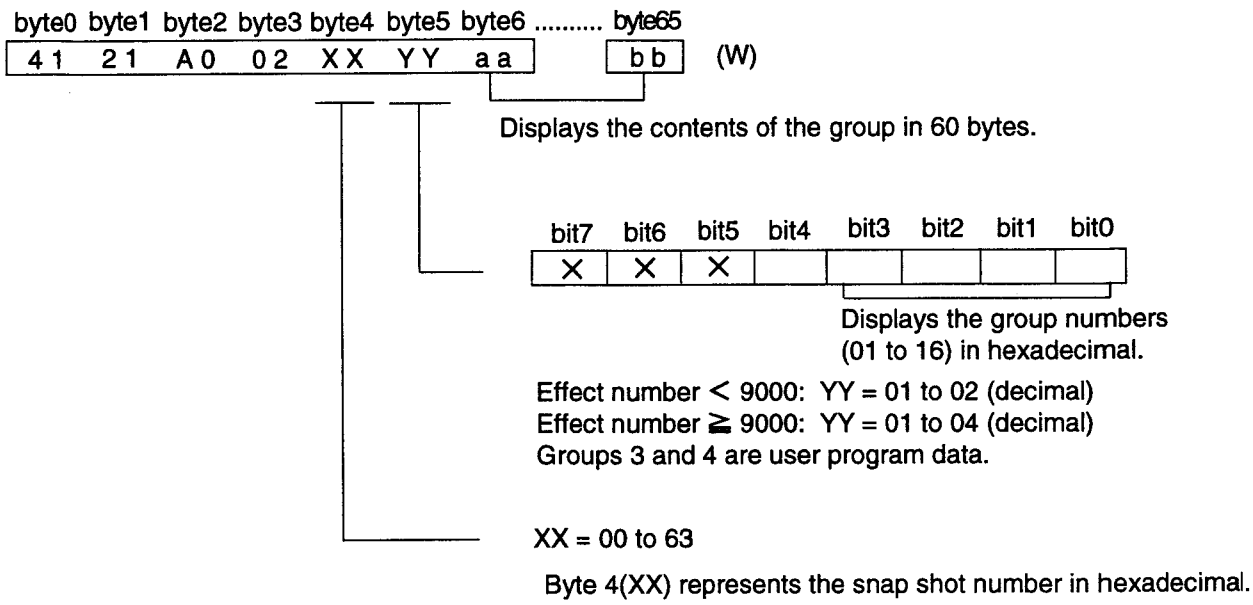

Function : Writes the contents of the snap shot register. (The snap shot number is specified by byte 4, and the group number is specified by byte 5.)

Note

During write operation, data should be sequentially sent from group 1.

2-7-6.Group Read

○ Command: GROUP READ

byte0	byte1	byte2	byte3	byte4	
04	21	30	02	XX	(R)

X X = 00 to 63
Byte 4(XX) represents the snap shot number in hexadecimal.

Function : Checks the block configuration of snap shot data. DFS or DCK returns the return parameter (GROUP TALLY) when a GROUP READ command (the snap shot number is specified by byte 4) is issued to DFS or DCK.

Return parameter : GROUP TALLY

byte0	byte1	byte2	byte3	byte4	byte5	byte6	
06	21	B0	02	XX	YY	ZZ	(R)

X X = 00 to 63
Byte 4(XX) represents the snap shot number in hexadecimal.

Byte 5(YY) and byte 6(ZZ) indicate the valid group contained in the snap shot register that is specified by byte 4(XX).

For effect number < 9000: Byte 5(YY) = 03, Byte 6(ZZ) = 00
For effect number ≧ 9000: Byte 5(YY) = 0F, Byte 6(ZZ) = 00

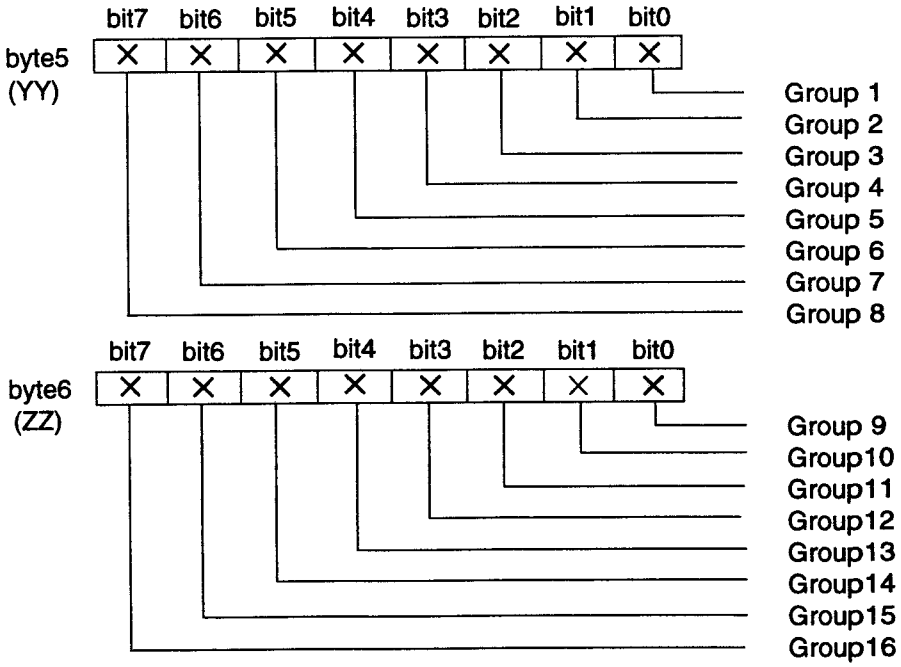

X = 1 indicated the valid group contained in the snap shot register.

SONY

DME SWITCHER

DFS-500
DFS-500P

SERVICE MANUAL

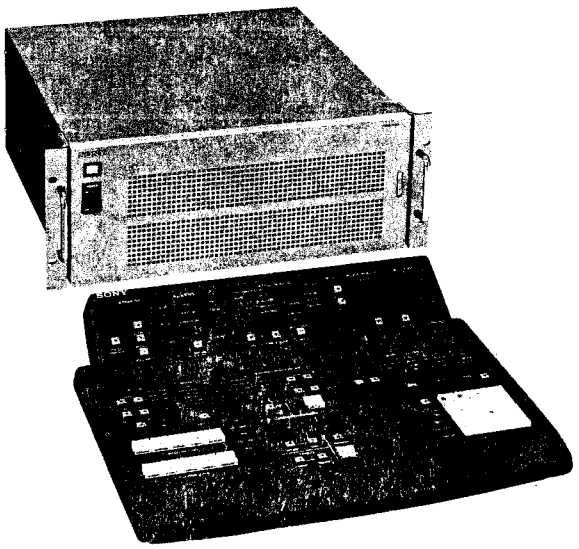

SAFETY CHECK-OUT

After correcting the original service problem, perform the following safety checks before releasing the set to the customer:

Check the metal trim, "metallized" knobs, screws, and all other exposed metal parts for AC leakage. Check leakage as described below.

LEAKAGE TEST

The AC leakage from any exposed metal part to earth ground and from all exposed metal parts to any exposed metal part having a return to chassis, must not exceed 0.5 mA. Leakage current can be measured by any one of three methods.

1. A commercial leakage tester, such as the Simpson 229 or RCA WT-540A. Follow the manufacturers' instructions to use these instruments.
2. A battery-operated AC milliammeter. The Data Precision 245 digital multimeter is suitable for this job.
3. Measuring the voltage drop across a resistor by means of a VOM or battery-operated AC voltmeter. The "limit" indication is 0.75 V, so analog meters must have an accurate low-voltage scale. The Simpson 250 and Sanwa SH-63Trd are examples of a passive VOM that is suitable. Nearly all battery operated digital multimeters that have a 2 V AC range are suitable. (See Fig. A)

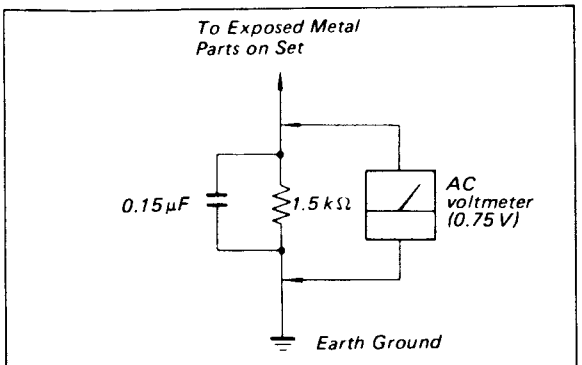

Fig. A. Using an AC voltmeter to check AC leakage.

このマニュアルに記載されている事柄の著作権は当社にあり，説明内容は機器購入者の使用を目的としています。
従って，当社の許可なしに無断で複写したり，説明内容(操作，保守等）と異なる目的で本マニュアルを使用することを禁止します。

The material contained in this manual consists of information that is the property of Sony Corporation and is intended solely for use by the purchasers of the equipment described in this manual.
Sony Corporation expressly prohibits the duplication of any portion of this manual or the use thereof for any purpose other than the operation or maintenance of the equipment described in this manual without the express written permission of Sony Corporation.

Le matériel contenu dans ce manuel consiste en informations qui sont la propriété de Sony Corporation et sont destinées exclusivement à l'usage des acquéreurs de l'équipement décrit dans ce manuel.
Sony Corporation interdit formellement la copie de quelque partie que ce soit de ce manuel ou son emploi pour tout autre but que des opérations ou entretiens de l'équipement à moins d'une permission écrite de Sony Corporation.

Das in dieser Anleitung enthaltene Material besteht aus Informationen, die Eigentum der Sony Corporation sind, und ausschließlich zum Gebrauch durch den Käufer der in dieser Anleitung beschriebenen Ausrüstung bestimmt sind.
Die Sony Corporation untersagt ausdrücklich die Vervielfältigung jeglicher Teile dieser Anleitung oder den Gebrauch derselben für irgendeinen anderen Zweck als die Bedienung oder Wartung der in dieser Anleitung beschriebenen Ausrüstung ohne ausdrückliche schriftliche Erlaubnis der Sony Corporation.

TABLE OF CONTENTS

1. SERVICE INFORMATION

1. Removal of Cabinet 1-1
2. Boards Location 1-3
1-3. Printed Ciucuit Board Function 1-5
1-4. Replacement of Board 1-5
1-4-1. Plug-in Board Removing/Inserting 1-5
1-4-2. Board Replacement 1-6
1-5. Replacement of Switching Regulator 1-9
1-5-1. Primary Circuit and Electric Shock 1-9
1-5-2. Switching Regulator of Removal 1-9
1-6. Replacement of DC Fan Motor 1-9
1-7. Replacement of Main Parts on Control Panel 1-10
8. Rack-Mounting 1-11
1-8-1. When Using RMM-30 (optional accessary) 1-11
1-8-2. In Cases When Other Than RMM-30 is Used 1-12
1-8-3. BKDF-503 Installation 1-13
1-9. Fixtures/Mesuring Instruments 1-14
1-9-1. Fixtures 1-14
1-9-2. Use of Extension Board 1-15
1-9-3. Mesuring Instruments 1-15
1-10. Connect of Supplied Power Cord 1-16
11. Matching Connector/Cable 1-16
12. Input/Output Signals of Connector 1-17
1-13. Explain of Switch/Indicator/Volume 1-24
1-14. Notes on Spare Parts 1-30
1-14-1. Notes on Spare Parts 1-30
1-14-2. Replacement of Chip Parts 1-30
1-14-3. Removal of PLCC IC 1-31
1-14-4. Replacement of Backup Battery 1-32
1-14-5. Replacement of Fuse 1-32
15. Timing Chart 1-33
1-15-1. System Timing 1-33
1-15-2. Timing of Title and DSK (Video Phase) 1-34

2. DIAGNOSTIC

2-1. Flow Chart 2-1
2-2. Check Mode 2-2
2-2-1. Countermeasures for Error Messages 2-3
2-2-2. Backup Memory Warnings 2-3
2-2-3. Control Panel and Process Unit Synchronization Check 2-4
2-2-4. Display Confirmation of ROM (IC14/KY-223 board) Version of Control Panel 2-4
2-2-5. Display Confirmation of ROM (IC1, IC2/SY-172 board) Version of Process Unit System Control 2-5
2-2-6. Display Confirmation of ROM (IC3, IC4/SY-172 board) Version of Process Unit Effect Control 2-5
2-2-7. Display Confirmation of ROM (IC5, IC6/SY-172 board) Version of Process Unit Effect Data 1 2-6
2-2-8. Display Confirmation of ROM (IC7, IC8/SY-172 board) Version of Process Unit Effect Data 2 2-6
2-2-9. Communication Check between Control Panel and Process Unit 2-7
2-2-10. Parity Check of ROM (IC14/KY-223 board) of Control Panel 2-8
2-2-11. RAM (IC15/KY-223 board) Check of Control Panel 2-9
2-2-12. RAM (IC59, IC60, IC61, IC62/ SY-172 board) Check of Process Unit 2-9
2-2-13. Light Check of Control Panel LED 2-10
2-3. Checking Knobs, Levers and Buttons on Control Panel 2-13
2-3-1. Checking Knobs, Levers and Buttons on Control Panel 2-14

3. ELECTRICAL ALIGNMENT

3-1. Adjustment Sequence 3-1
3-2. Adjustment Preparations 3-2
3-2-1. Tools/Measuring Equipments 3-2
3-2-2. Connection 3-3
3-2-3. Built-in Color Bars 3-4
3-2-4. Layout of Adjustment Controls 3-6
3-3. DA-63 Board Adjustment 3-7
3-3-1. GEN Lock Adjustment-1 3-7
3-3-2. GEN Lock Adjustment-2 3-8
3-3-3. INT SC Frequency Adjustment 3-10
3-3-4. INT SC Phase Adjustment 3-12
3-3-5. Clamp Phase & Width Adjustment 3-14
3-3-6. B.B Out's SC Leak Balance Adjustment 3-16
3-3-7. Moduration Axis & B.B Burst Balance Adjustment (FOR EK ONLY) 3-17
3-3-8. B.B Output Gain Adjustment 3-19
3-3-9. B.B Burst Phase & Width Adjustment 3-20
3-3-10. Key Out Gain Adjustment 3-22
3-3-11. PGM Out Component Y Gain Adjustment 3-23
3-3-12. PGM Out BLK Phase & Width Adjustment 3-25
3-3-13. PGM Out Component R-Y Gain Adjustment 3-26
3-3-14. PGM Out Component B-Y Gain Adjustment 3-28
3-3-15. Y/R-Y Delay Adjustment 3-30
3-3-16. Y/B-Y Delay Adjustment 3-31
3-3-17. Composite SC Leak Balance Adjustment 3-32
3-3-18. Composite Y Gain Adjustment 3-34
3-3-19. Moduration Axis Adjustment (FOR UC ONLY) 3-36
3-3-20. Composite C Gain Adjustment 3-37
3-3-21. Composite Burst Balance Adjustment (FOR EK ONLY) 3-39
3-3-22. Composite Burst Level Adjustment 3-40
3-3-23. Y/C (S) Y Gain Adjustment 3-42
3-3-24. Y/C (S) C Gain Adjustment 3-44
3-4. AD-76 Board Adjustment 3-46
3-4-1. Component Clamp Level Adjustment 3-46
3-4-2. Component Y Level Adjustment 3-54
3-4-3. Component Chroma Level Adjustment 3-56
3-4-4. W HD Phase Adjustment 3-62
3-4-5. Component Y/C Delay Adjustment 3-64
3-4-6. Y/C Input Y Level Adjustment 3-66
3-4-7. Chroma Decoder Clock Frequency Adjustment 3-70
3-4-8. Y/C Chroma Level Adjustment 3-72
3-4-9. Y/C Input Y/C Delay Adjustment 3-76
3-4-10. APC Lock Adjustment 3-82
3-4-11. Composite Y Level Adjustment 3-84
3-4-12. Composite Chroma Level Adjustment 3-87

4. BLOCK DIAGRAMS

OVERALL Block 4-1
Overall Block
AD-76 Block 4-2
A/D Converter
FM-29 Block 4-3
Frame Synchronizer
MY-54 Block 4-4
Field Memory
PU-78 Block 4-5
Address Operation
DA-63 Block 4-6
D/A Converter
SY-172 Block 4-7
System Control
CONTROL PANEL Block 4-8
Control Panel

5. SCHEMATIC DIAGRAMS

PROCESS UNIT
AD-76 Board 5-3
A/D Converter
FM-29 Board 5-17
Frame Synchronizer
MY-54 Board 5-29
Field Memory
PU-78 Board 5-35
Address Operation
DA-63 Board 5-41
D/A Converter
SY-172 Board 5-51
System Control
CN-573 Board 5-55
Connector Board
MB-385 Board 5-57
Mother Board

CONTROL PANEL
KY-223 Board 5-59
Function Key
KY-225 Board 5-65
Switch

FRAME 5-69
Frame Wiring

BOARD LAYOUTS

PROCESS UNIT

AD-76 Board 6-2
A/D Converter
FM-29 Board 6-4
Frame Synchronizer
MY-54 Board 6-6
Field Memory
PU-78 Board 6-8
Address Operation
DA-63 Board 6-10
D/A Converter
SY-172 Board 6-12
System Control
CN-573 Board 6-14
Connector Board
MB-385 Board 6-16
Mother Board

CONTROL PANEL

KY-223 Board 6-18
Function Key
KY-225 Board 6-20
Switch

FRAME 6-21

AC-111 Board (For EK)
Line Filter
KY-226 Board
Positioner
LE-55 Board
Power Indicator
VR-135 Board
Location Control
Title Control
DSK (Down Stream Keyer) Control
VR-136 Board
Edge/Trail/Shadow Control
VR-137 Board
Mattes/BKGD Control
VR-138 Board
Effect Control

7. SEMICONDUCTOR PIN ASSIGNMENTS

SEMICONDUCTOR INDEX 7-1
IC 7-2
TRANSISTOR 7-37
DIODE 7-38

8. SPARE PARTS

8-1. Notes on Spare Parts 8-1
8-2. Exploded View & List 8-2
8-3. Electrical Parts List 8-9
Capacitor 8-9
Resistor 8-9

AC-111 Board 8-10
AD-76 Board 8-10
AD-76P Board 8-21
CN-573 Board 8-31
DA-63 Board 8-32
DA-63P Board 8-38
FM-29/FM-29P Board 8-44
KY-223 Board 8-47
KY-225 Board 8-52
KY-226 Board 8-54
LE-55B Board 8-54
MB-385 Board 8-54
MY-54 Board 8-55
PU-78 Board 8-57
SY-172/SY-172P Board 8-59
VR-135 Board 8-61
VR-136 Board 8-61
VR-137 Board 8-61
VR-138 Board 8-62

Frame 8-62
Harness's Child Parts 8-62
Packing Materials & Supplied Accessories 8-63

8-4. Optional Fixtures 8-63

SECTION 1
SERVICE INFORMATION

1-1. REMOVAL OF CABINET

PROCESS UNIT>

FRONT PANEL:

(1) After pushing the lower part of the handle in the direction of the arrow of ① and then pulling in the direction of the arrow of ②, open the Front Panel.
(2) Pushing up the Stopper Ass'y in the direction of the arrow of ③, and remove the Stopper Ass'y.
(3) Pushing the Hinge in the direction of ④, and remove Front Panel.

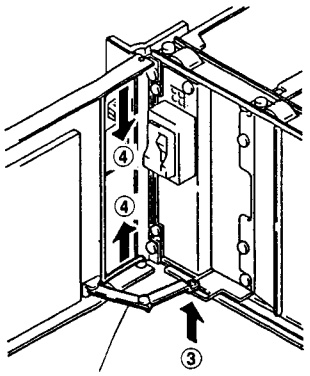

REAR PANEL:

(1) Remove six screws (+B 4 × 6).
(2) Remove two screws (+B 3 × 10) on the Plug Holder (A) and remove the Rear Panel.

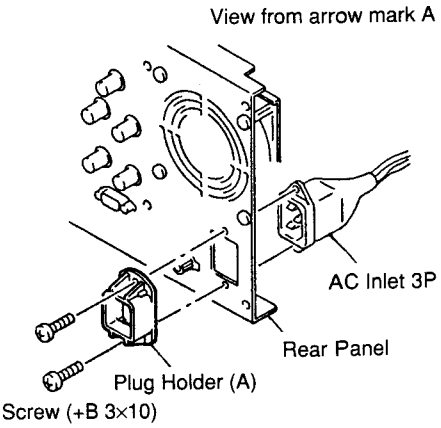

TOP PANEL:

(1) Open the Front Panel.
(2) Remove four screws (M3 case screw) and remove the Top Panel.

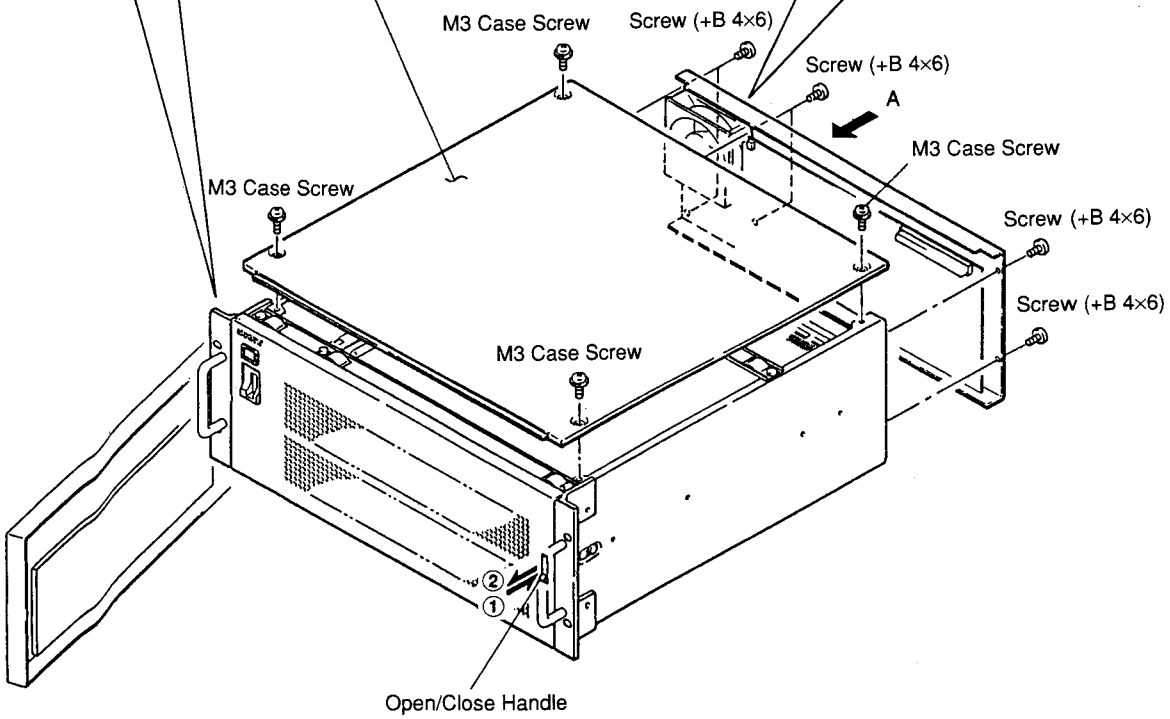

<CONTROL PANEL>

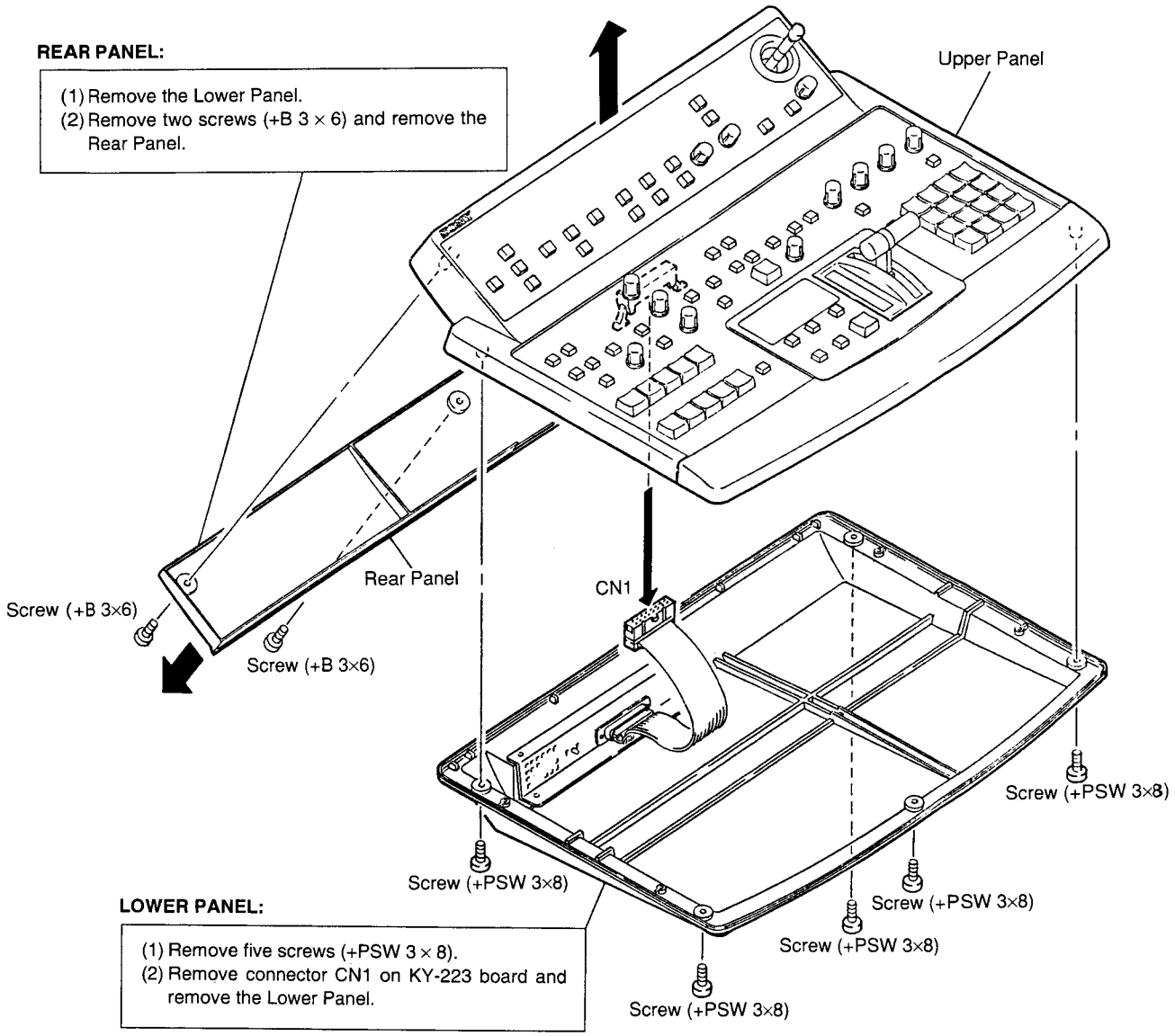

1-2. BOARDS LOCATION

PROCESS UNIT>

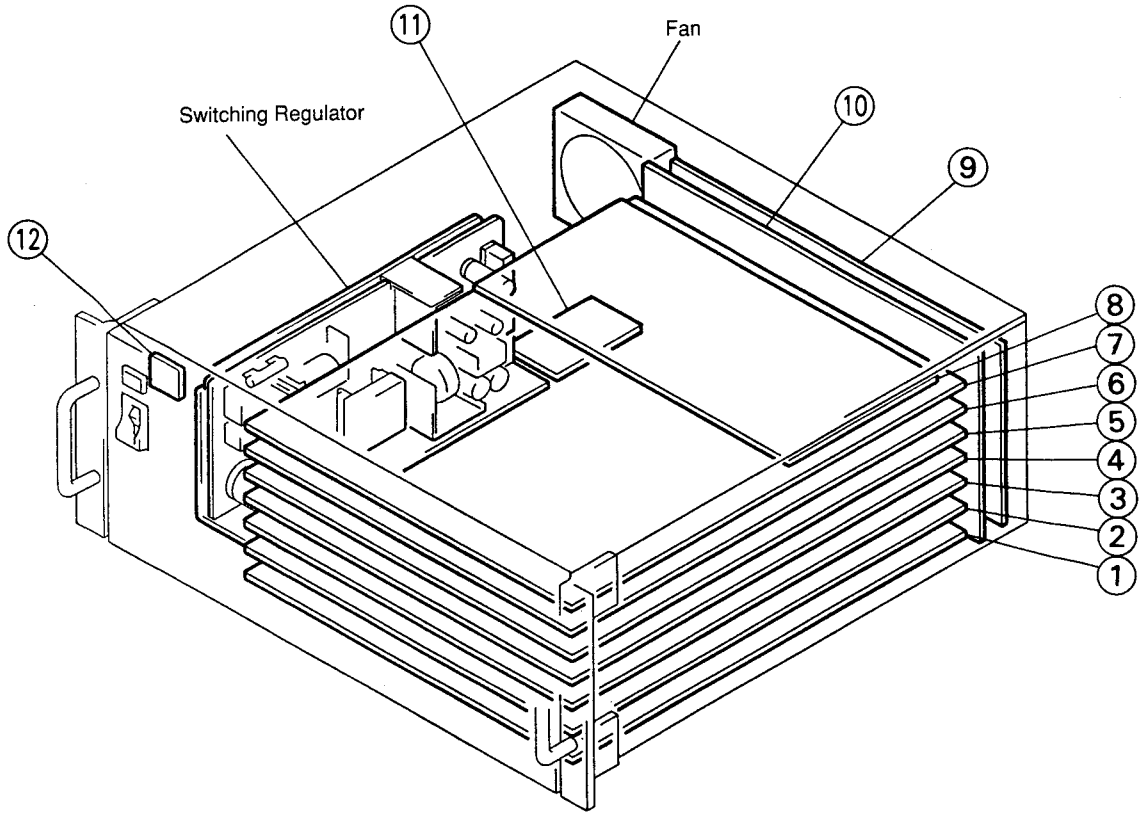

1. AD-76 Board : A/D Converter
2. SY-172 Board : System Control
3. FM-29 Board : Frame Synchronizer
4. PU-78 Board : Address Operation
5. MY-54 Board : Field Memory
6. VE-25 Board : Lighting and Trail (option)
7. DA-63 Board : D/A Converter
8. DK-5 Board : DSK (Down Stream Keyer) (option)
9. CN-573 Board : Rear Panel Connector
0. MB-385 Board : Mother board
1. AC-111 Board : Line Filter (for EK)
12. LE-55 Board : Power Indicator

<CONTROL PANEL>

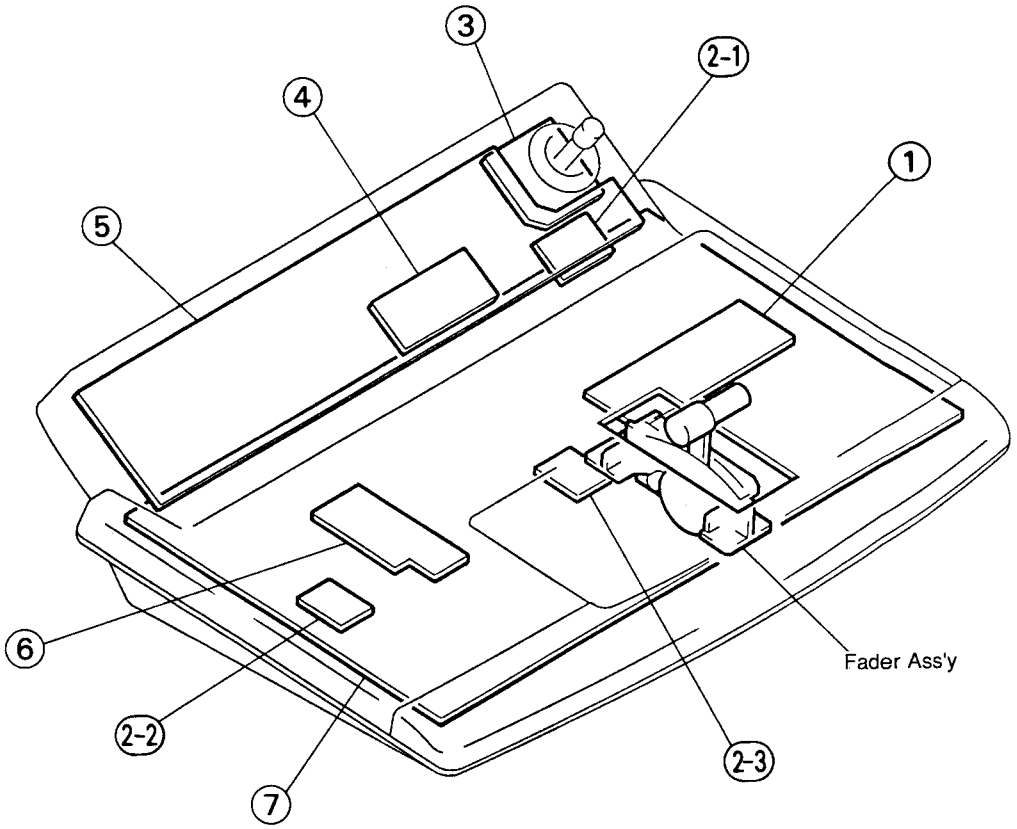

1. VR-138 Board : Effect Control
2-1. VR-135 Board : Location Control
2-2. VR-135 Board : Title Control
2-3. VR-135 Board : DSK (Down Stream Keyer) Control
3. KY-226 Board : Positioner
4. VR-136 Board : Edge/Trail/Shadow Control
5. KY-225 Board : Switch
6. VR-137 Board : Mattes/BKGD Control
7. KY-223 Board : Function Key

1-3. PRINTED CIRCUIT BOARD FUNCTION

) "SP Code" means Supply Code.
② "PCB" in the SP Code column means Printed Circuit Board, "MCB" in the SP Code column means Mounted Circuit Board.

<PROCESS UNIT>

BOARD	CIRCUIT FUNCTION	SP CODE
AC-111	Line Filter (for EK)	O(PCB)
AD-76	A/D Converter	O(MCB)
CN-573	Rear Panel Connector	O(MCB)
DA-63	D/A Converter	O(MCB)
DK-5(*1)	DSK(Down Stream Keyer)	U
FM-29	Frame Synchronizer	O(MCB)
LE-55	Power Indicator	O(PCB)
MB-385	Mother Board	O(MCB)
MY-54	Field Memory	O(MCB)
PU-78	Address Operation	O(MCB)
SY-172	System Control	O(MCB)
VE-25(*2)	Lighing and Trail	U

<CONTROL PANEL>

BOARD	CIRCUIT FUNCTION	SP CODE
KY-223	Function Key	O(MCB)
KY-225	Switch	O(MCB)
KY-226	Positioner	O(MCB)
VR-135	Location Control Title Control DSK(Down Stream Keyer) Control	O(PCB)
VR-136	Edge/Trail/Shadow Control	O(PCB)
VR-137	Mattes/BKGD Control	O(PCB)
VR-138	Effect Control	O(PCB)

NOTE: (*1) DK-5 Board is Optional Board; BKDF-502.
(*2) VE-25 Board is Optional Board; BKDF-501.

1-4. REPLACEMENT OF BOARD

1-4-1. Plug-in Board Removing/Inserting

NOTE: In more than two seconds after turning the power on the Process Unit OFF and remove or insert the Plug-in boards definitely (AD-76, DA-63, FM-29, MY-54, PU-78 and SY-172 boards). (If the board is inserted in a state of turning the power on, the fuse on the board has run out and the board can be not used.

Plug-in Borad Removing
Pull up the eject levers on the board in the direction of the arrow, and then remove the board from the connectors on the MB-385 board.

Plug-in Board Inserting
The eject levers pull up as shown in the figure, insert the board. After inserting the board, push down the eject levers in the direction of the arrow and connect certainly to the connectors on the MB-385 board.

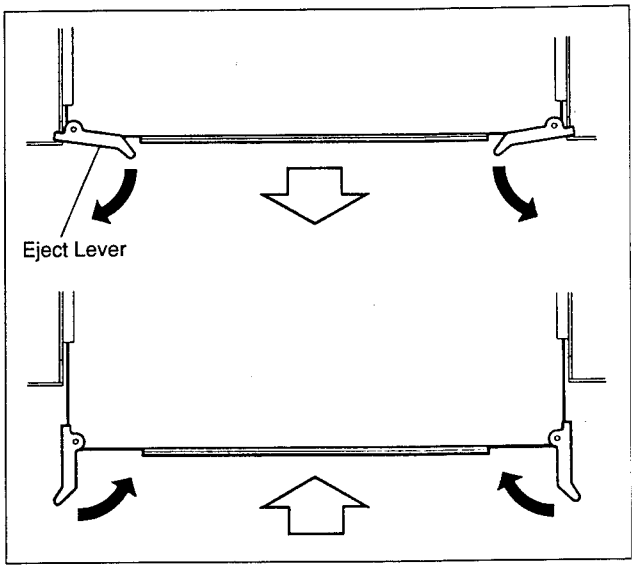

1-4-2. Board Replacement

<PROCESS UNIT>

CN-573 Board:

① Remove the rear panel. (Refer to "Section 1-1 REMOVAL OF CABINET" Rear Panel.)

② Remove connector CN40 from the CN-573 board.

③ Remove thirty-seven screws (+BVTP 3 × 8: twenty-eight screws / +B 3 × 6: nine screws), and remove the CN-573 board.

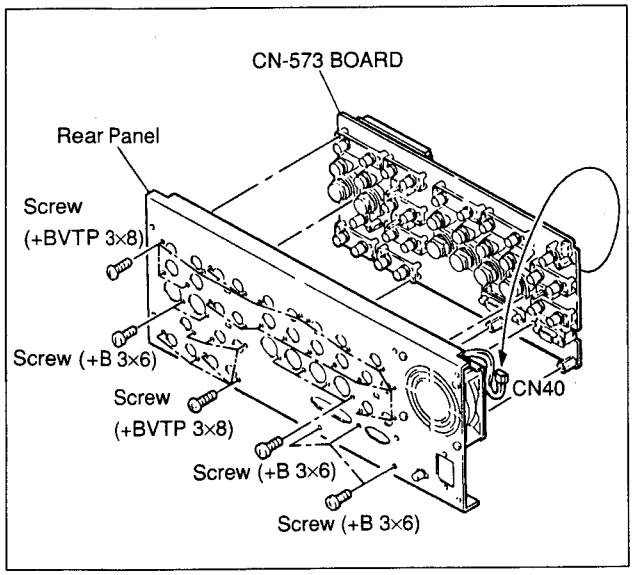

④ Replace a new one in the reverse procedure of steps ① through ③.

MB-385 Board:

① Remove all the Plug-in Boards.

② Remove the rear panel. (Refer to "Section 1-1 REMOVAL OF CABINET" Rear Panel.)

③ Remove connectors CN22, CN23, CN24 and CN25 on the MB-385 board.

④ Remove eight screws (+PSW 3 × 8), and remove the Mother Board Ass'y.

⑤ Remove eight screws (+PSW 3 × 8), and remove the MB-385 board from the Mother Board Reinforcement.

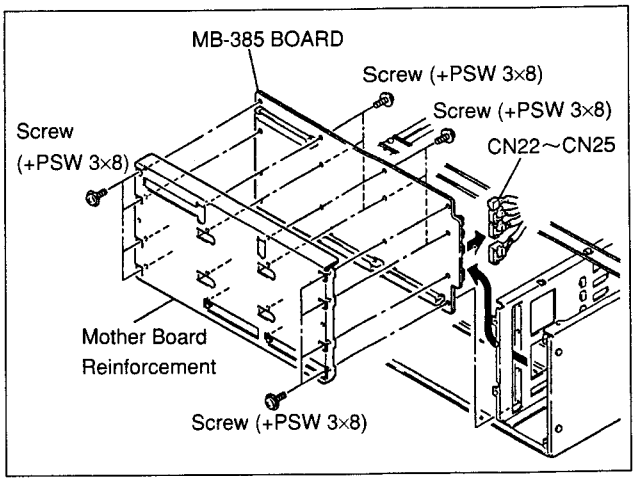

⑥ Install the Mother board Reinforcement to a new MB-385 board by eight screws (+PSW 3 × 8).

⑦ Thread eight screws (+PSW 3 × 8) to the Mother board Ass'y snugly but do not tighten.

⑧ Insert the DA-63 board into the No.1 slot and the AD-76 board into the No.7 slot and connect the connectors on the DA-63 and AD-76 boards to connectors on the MB-385 Borad.

⑨ Tighten the eight screws which is threaded snugly in step ⑦.

<CONTROL PANEL>

KY-223 Board:

① Remove nine volume knobs.

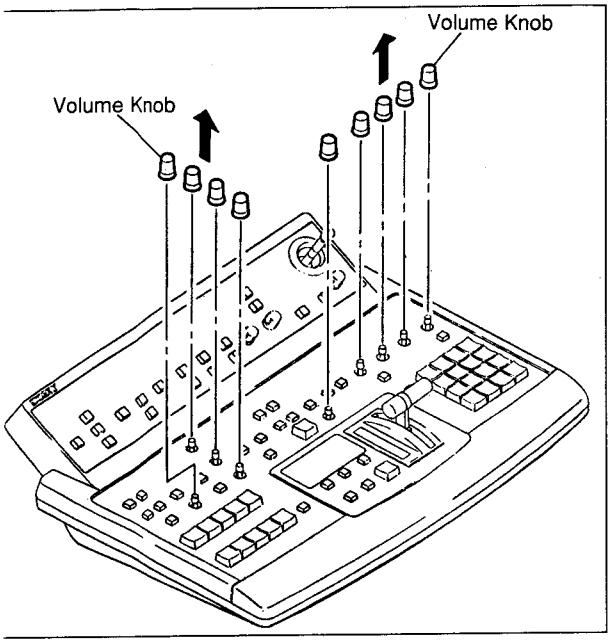

② Remove the lower panel. (Refer to "Section 1-1 REMOVAL OF CABINET" Lower Panel.)

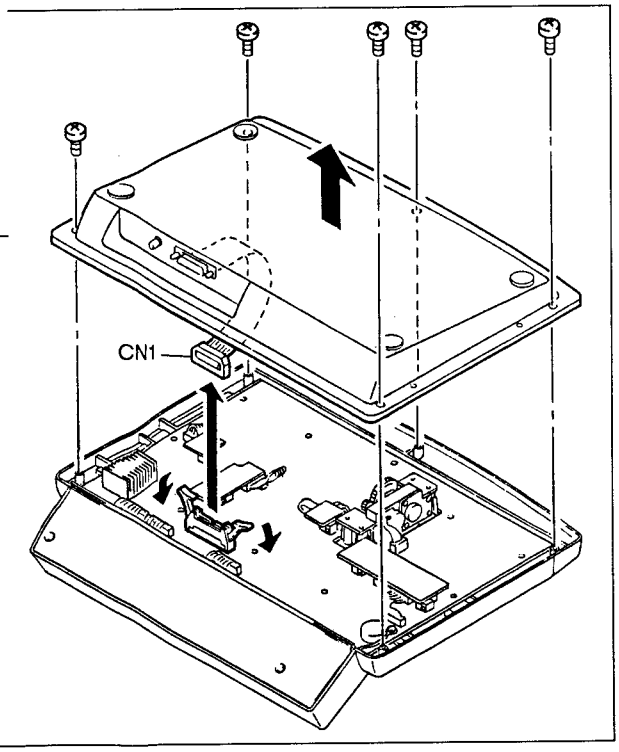

③ Remove connectors CN2, CN3, CN4 and CN9 on the KY-223 board. Remove one screw (+BVWH 3 × 8) and remove the Harness (KY-4).

④ Remove fourteen screws (+BVWH 3 × 8) and remove the KY-223 board.

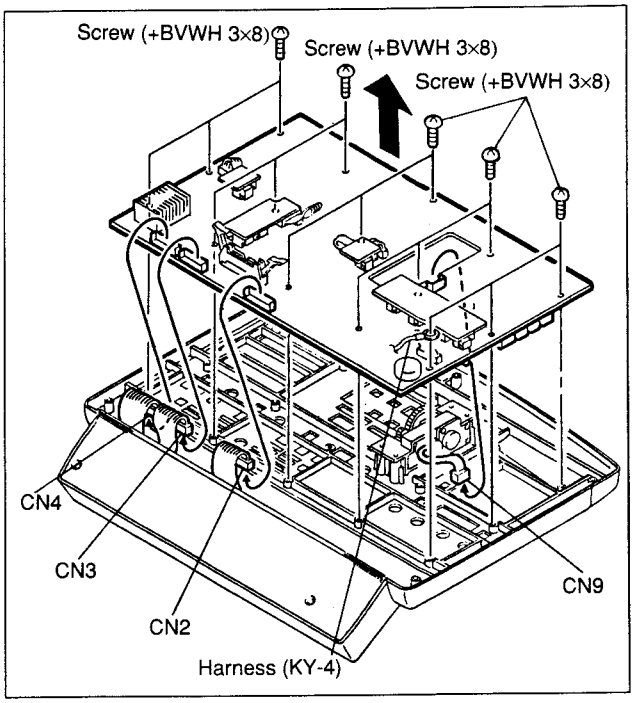

⑤ Replace a new one in the reverse procedure of steps ① through ④.

KY-225 Board:

① Remove three volume knobs.

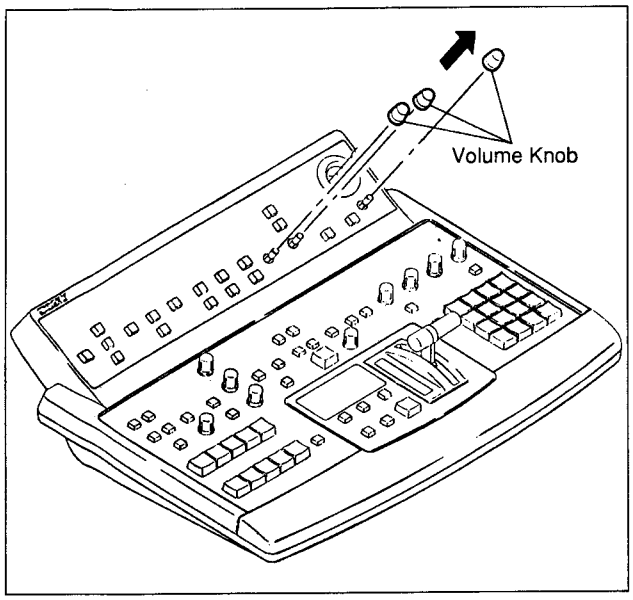

② Remove the lower panel and the rear panel. (Refer to "Section 1-1 REMOVAL OF CABINET" Lower Panel and Rear Panel.)

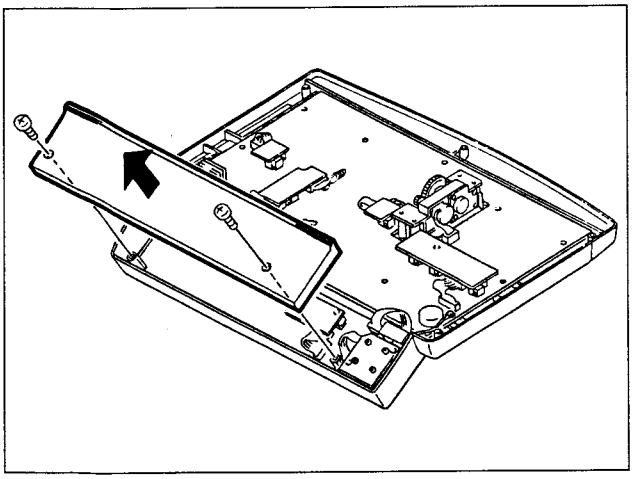

③ Remove connectors CN1, CN2, CN3 and CN4 from the KY-225 board, and remove one screw (+B 3 × 6) and remove the Harness (KY-4).

④ Remove six screws (+PSW 3 × 8) and two relay bosses (17.2), remove a new one.

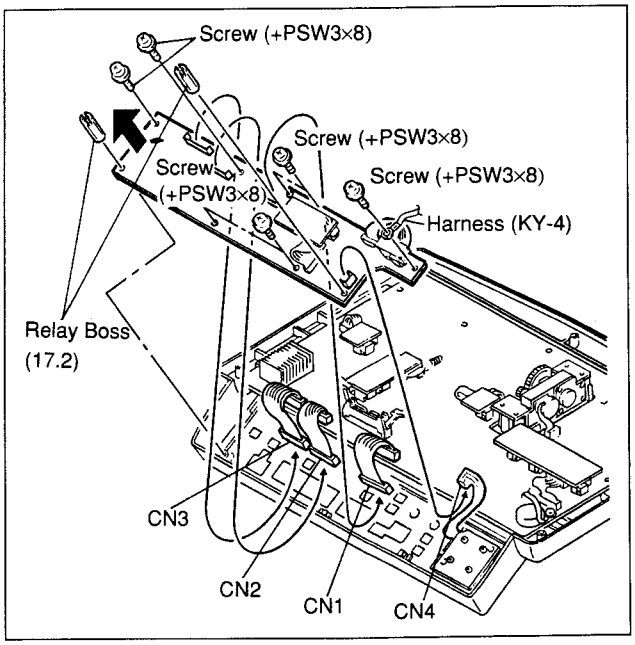

⑤ Replace a new one in the reverse procedure of steps ① through ④.

1-5. REPLACEMENT OF SWITCHING REGULATOR

1-5-1. Primary Circuit and Electric Shock

The most of the switching regulator is primary side circuit. ake care of an electric shock when removing the switching gulator for replacement or another reason.

1-5-2. Switching Regulator of Removal

OTE: When replacement of the switching regulator, be sure to turn the power OFF and start work.

EPLACEMENT PROCEDURE>

) Remove the top panel. (Refer to "Section 1-1 REMOVAL OF CABINET" Top Panel)
) Remove three connectors and Harness.
) Remove the Harness (AC Inlet) from the wire clamp.
) Remove two screws (+PWH 4 × 8).
⑤ Pull up the switching regulator.

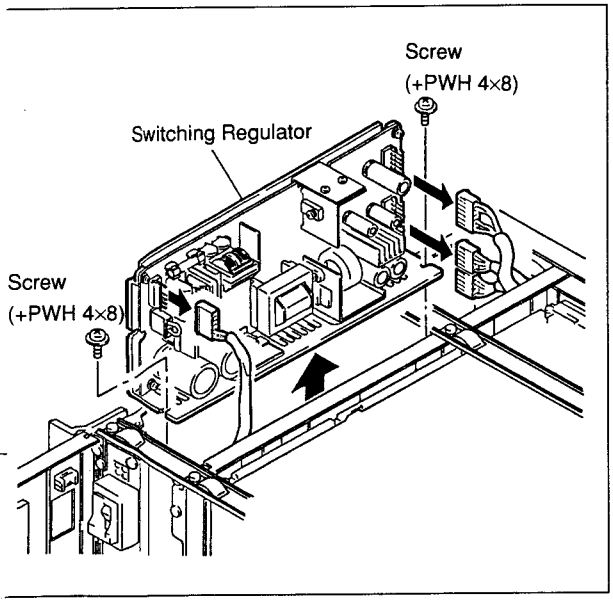

⑥ Replace a new one in the reverse procedure of steps ① through ⑤.

1-6. REPLACEMENT OF DC FAN MOTOR

NOTE: If the unit serves for about ten thousand times, the DC fan motor should be replaced.

<REPLACEMENT PROCEDURE>

① Remove the rear panel Ass'y. (Refer to "Section 1-1 REMOVAL OF CABINET" Rear Panel.)
② Remove connector CN40 on the CN-573 board. Remove four screws (+B 4 × 30) and remove the DC fan motor.

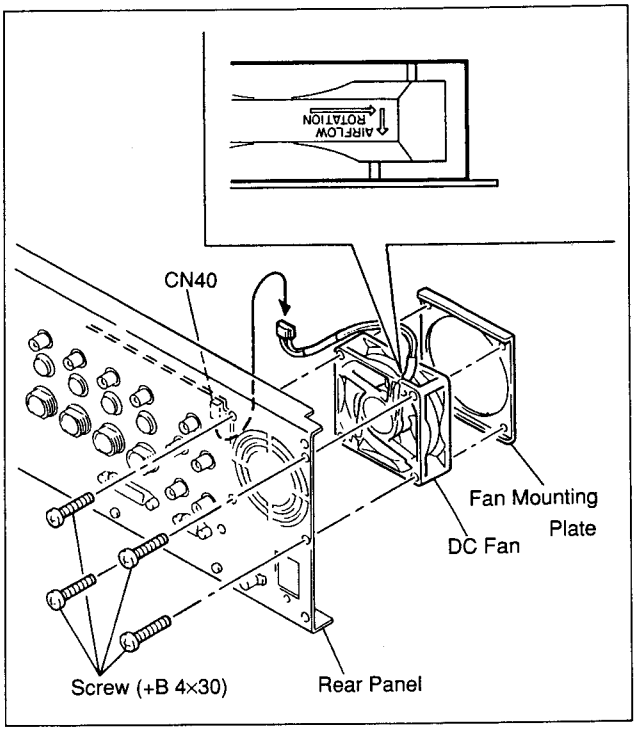

③ Install a new one in the direction of the arrow in the figure in the revers of steps ① through ②.

1-7. REPLACEMENT OF MAIN PARTS ON CONTROL PANEL

<FADER ASS'Y>

① Remove the Grip A and Grip B.

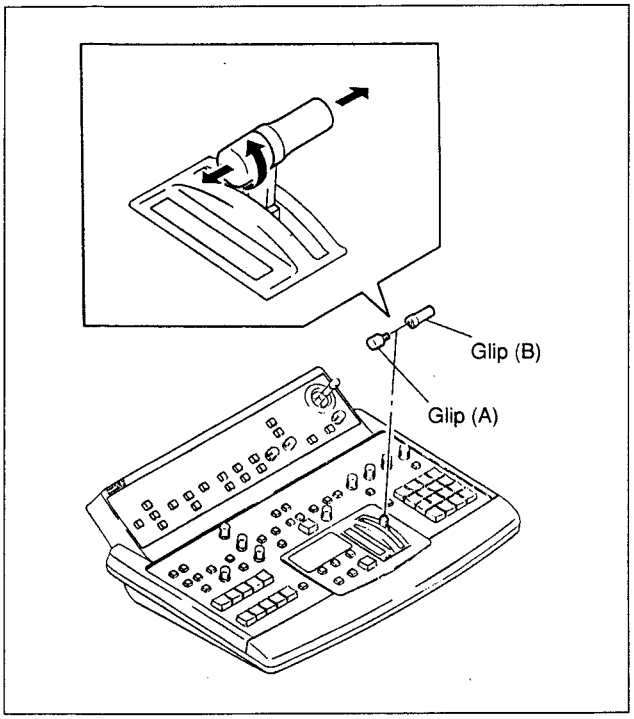

② Remove the lower panel. (Refer to "Section 1-1 REMOVAL OF CABINET" Lower Panel.)

③ Remove connector CN9 on the KY-223 board.
Remove four screws (+PSW 3 × 8) and remove the Fader Ass'y.

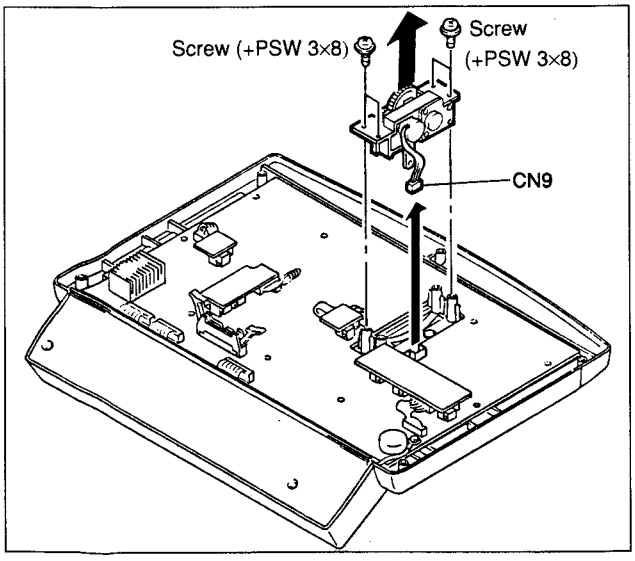

④ Replace a new one in the reverse of steps ① through ②.

<POSITION ADJUTMENT of ROTARY ENCODER>

When replaceing a Rotary Encoder, adjust the lever for moving smoothly. Tighten three screws (+B 2 × 4) of a new one.

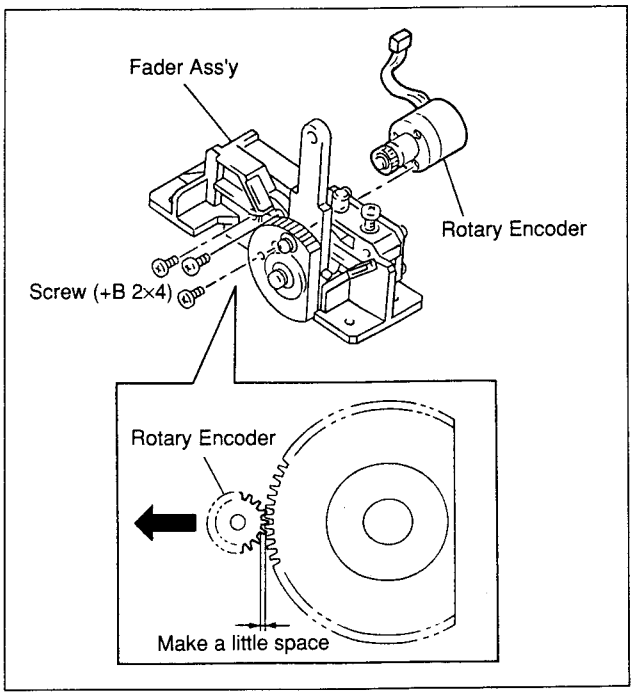

<JOY STICK>

① Remove the lower panel and the rear panel. (Refer to "Section 1-1 REMOVAL OF CABINET" Lower Panel and Rear Panel.)

② Remove connector CN4 on the KY-225 board.
Remove two screws (+PSW 3 × 6) and remove the KY-226 board with Joy Stick.

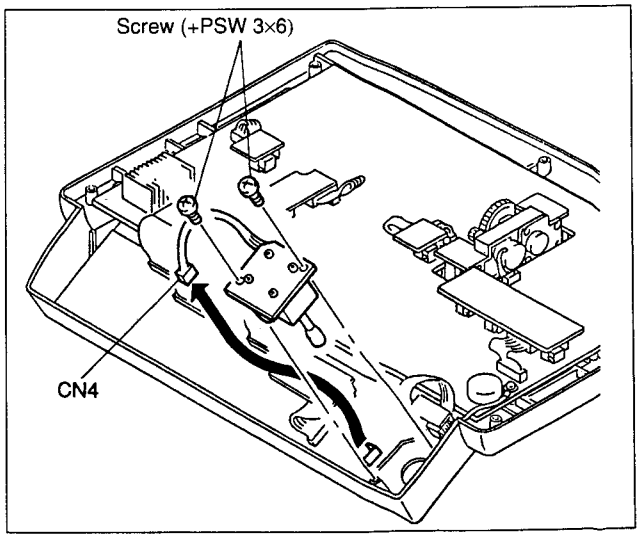

③ Replace a new one in the reverse of steps ① through ②.

1-8. RACK-MOUNTING

This unit can be mouted on an EIA Standard 19-inch rack. When mounting, be sure to use a support angle or slide rail.

- Recommended slide rail
  RMM-30 (SONY RACK MOUNT RAIL)

1-8-1. When Using RMM-30 (optional accessary)

One unit can be mounted easily on the 19-inch standard rack by using one RMM-30(SONY Rack Mount Rail) for one unit.

- Component parts

Rail with bracket	× 2
Screw (+PWH × 10)	× 2
Plate nut M4	× 2
Screw (+B 5 × 8)	× 8

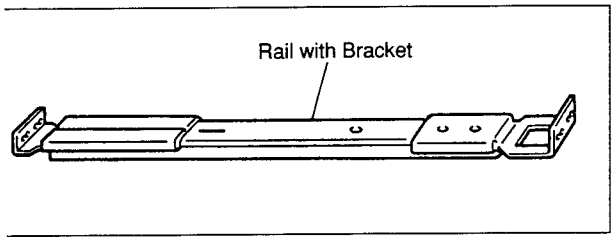

- Usable rack
  One with a depth of 660 to 830 mm

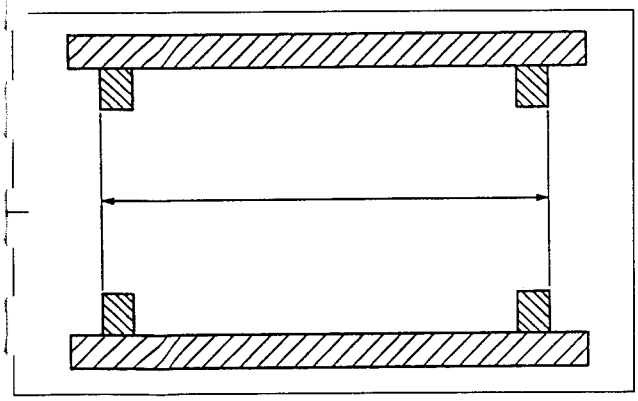

- How to install

① Remove four feet from the bottom of the unit.

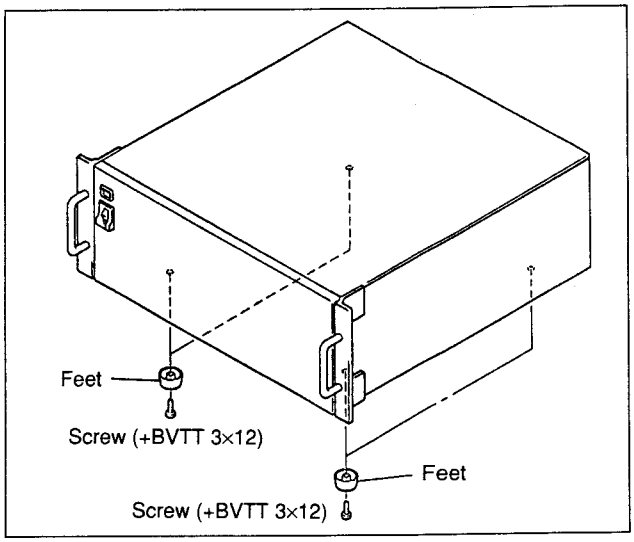

② Install the rack mounting rail. For details, refer to INSTALLATION MANUAL packed with the rack mounting rail RMM-30.

- Maximum movable length of the DFS-500 is as follows.

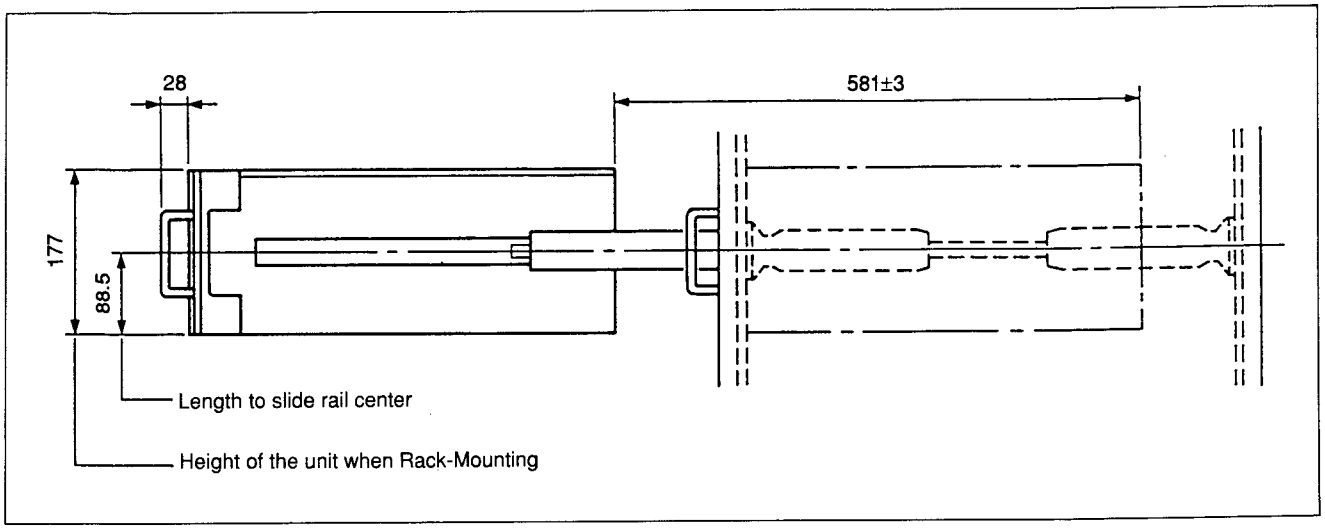

1-8-2. In Cases When Other Than RMM-30 Is Used:

In cases when a support angle or a slide rail that is sold by rack makers is used, check the external dimensions of the unit and the slide rail mounting holes and mount it according to the instruction manual of each rack maker.

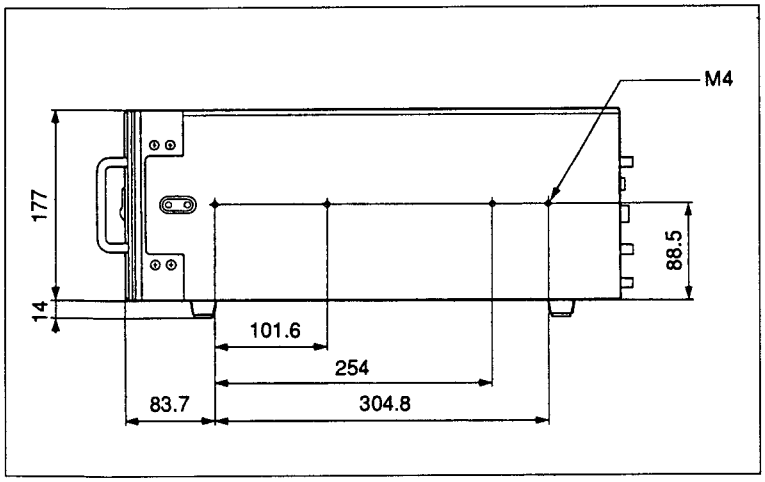

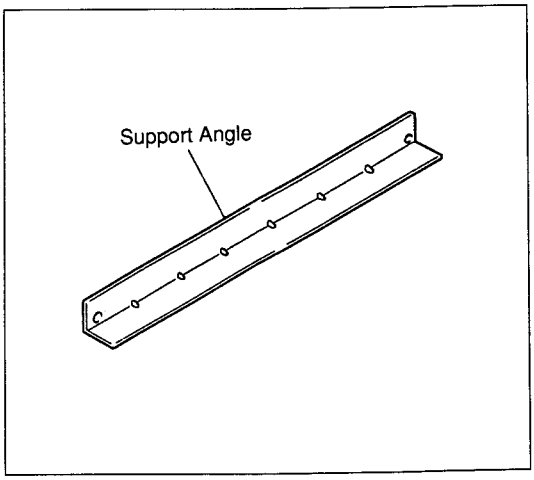

1-8-3. BKDF-503 Installation

(1) Install the BKDF-503, RACK MOUNT PANEL to the lower panel of the control panel.
Tighten the supplied accessary four screws (+BV 3 × 10) to the BKDF-503.

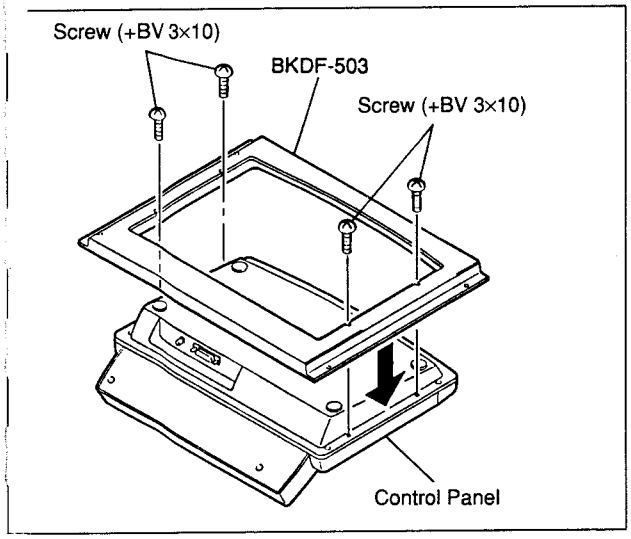

(2) Fit the BKDF-503 into the adjustment desk.
Tighten the supplied accessary four screws (+RK 5 × 12) and ornament washers (DIA.5) to the BKDF-503.

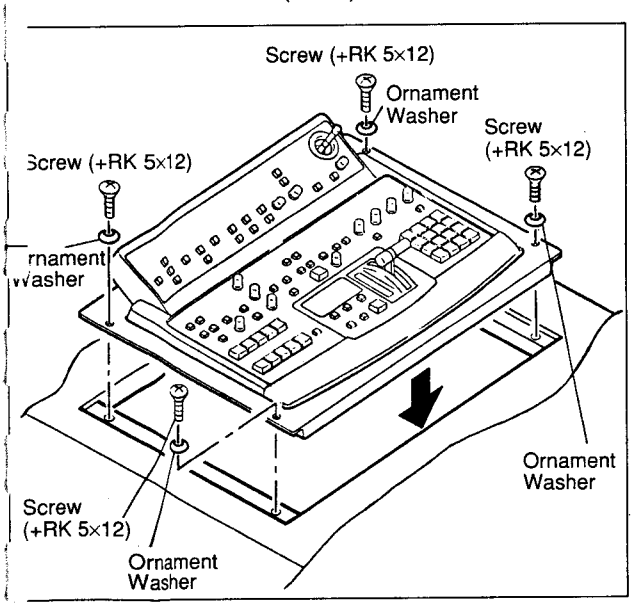

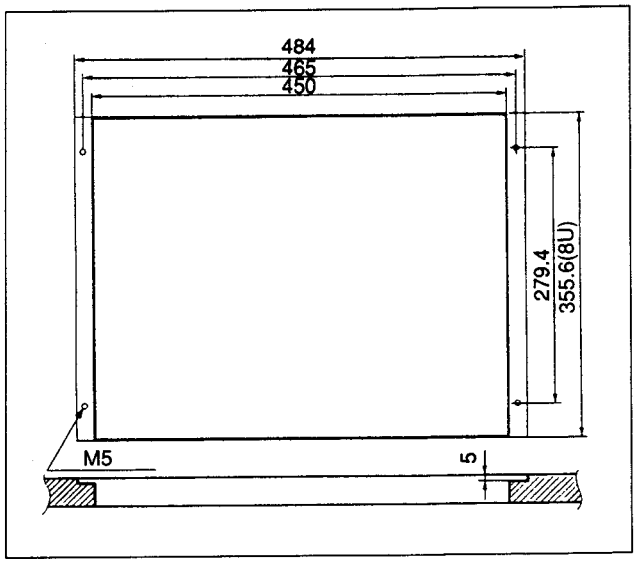

Dimension of installation hole on the adjustment desk

1-9. FIXTURES / MESURING INSTRUMENTS

1-9-1. Fixtures

Extension Board EX-326
Sony Part No. J-6186-940-A
Extension Board EX-326 is used for AD-76, DA-63, FM-29, MY-54, PU-78, SY-172 and VE-25 (BKDF-501/501P) Boards to inspect and adjust.

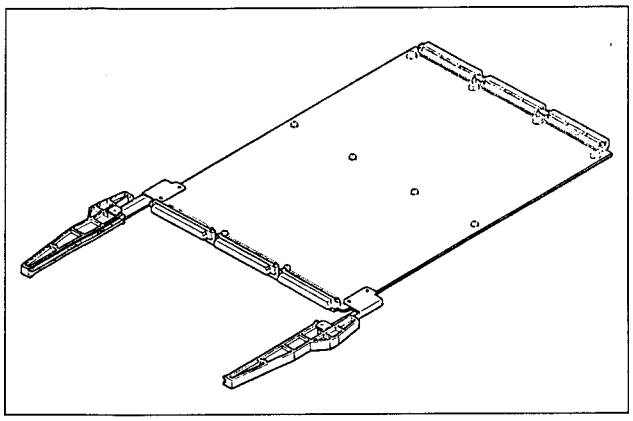

PLCC IC Extraction Tool
Sony Part No. J-6035-070-A
This tool is used for extracion the PLCC ICs,. (Refer to "Section 1-14-3 Replacement of PLCC IC".)

25-pin Control Cable (5m)
Sony Part No. 1-575-065-11
This 25-Pin Control Cable is used for inspection and adjustment.

Connector Cable
Multi Connector Cable (DOBNC)
Sony Part No. J-6031-830-A
Multi Connector Cable (DIBNC)
Sony Part No. J-6031-820-A

Video Cable (S-BNC)
Sony Parts No. J-6381-380-A

Standerd product

Spot Heater	HS-600 (100 V)
	HS-600 (117 V)
	HS-600 (220 V)
	HS-600 (240 V)
Nozzle	HS-616 (for HS-600)
	HS-619 (for HS-600)

These Spot Heater and Nozzle are used for extraction the ICs by warm wind after connecting the Spot Heater and the Nozzle.

For the above spot Heater and the Nozzle, please contact to the following.
Ikas,Inc
ADDRESS: Executive Center Suite 312, 21601 Devonshire St., Chatsworth, CA. 91311, USA
TEL: 818-882-4116
FAX: 818-341-6466

Bielec:
ADDRESS: Valencia, 40, 08015 Barcelona, Spain
TEL: 34 3 226 44 87
FAX: 34 3 226 69 32

Scope Laboratories:
3 Walton Street, Airport West, Melbourne, Australia
TEL: (03) 338 1566
FAX: (03) 338 5675

1-9-2. Use of Extension Board

① Turn the power OFF. Open the front panel. Pull up the eject levers on the board and remove the board.
② Insert the Extension Board, EX-326 to the slot of the removed board in step ①.
③ Insert the removed board to Extension Board, EX-326.

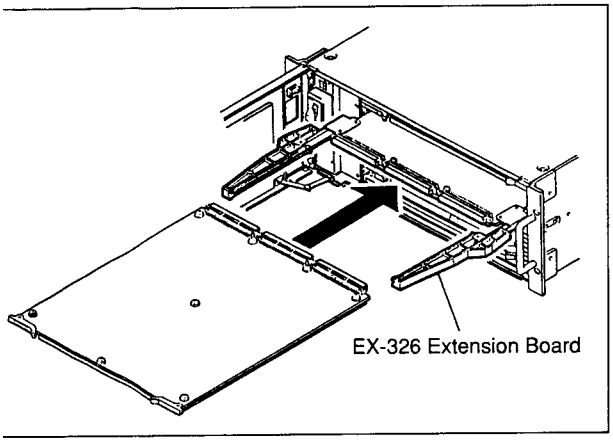

1-9-3. Mesuring Instruments

1. Comosite Signal Generator
   Equivalent: TEK1410/textronix

2. Y/C signal Generartor
   Equivalent: TSG130/textronix

3. Component Signal Generator
   Equivalent: TSG300/textronix

4. Waveform Monitor & Vectorscope (Composite)
   Equivalent: TEK1780R/textronix

5. Video Monitor
   Equivalent: PVM144Q/Sony

6. Oscilloscope
   Equivalent: 2445/textronix

7. Digital voltage meter
   Equivalent: 3435A/Hewlett Packard

8. Frequency counter
   Equivalent: 5315/Hewlett Packard

1-10. CONNECT OF SUPPLIED POWER CORD

(UC)Requied, Parts
① Power Cord 1-551-812-11
② Plug Holder(Black) 2-990-242-01

(EK)Requied, Parts
③ Power Cord 1-590-910-11
④ Plug Holder(Gray) 3-170-078-01

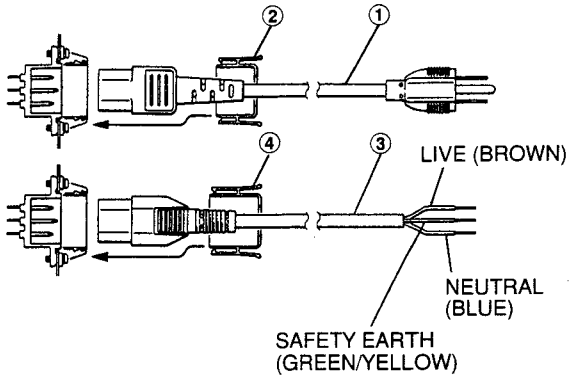

1-11. MATCHING CONNECTOR/CABLE

When connecting cable to the connectors on the connector panel, match those connectors or equivalent with each other as listed below.

DFS-500 side connector			Matching Connector or Cable	
Connector Function Name		Using Connector	Connector	Sony Parts No.
PGM OUT	COMPOSITE 1, 2 Y/C 1, 2 COMPONENT 1, 2	BNC S-VIDEO, Plug(F) Plug, 12(F)	BNC S-VIDEO, Plug(M) Plug, 12(M)	1-560-069-11 YC-30 V(3 m) 1-562-995-00
KEY OUT		BNC	BNC	1-560-069-11
BLACK BURST OUT	1, 2, 3, 4	BNC	BNC	1-560-069-11
DSK KEY IN	1, 2	BNC	BNC	1-560-069-11
DSK VIDEO IN	COMPOSITE/G/Y 1, 2 R/R-Y B/B-Y	BNC BNC BNC	BNC BNC BNC	1-560-069-11 1-560-069-11 1-560-069-11
VIDEO INPUTS	COMPOSITE 1, 2, 3, 4 Y/C 1, 2, 3, 4 COMPONENT 1, 2, 3, 4	BNC S-VIDEO, Plug(F) Plug, 12(M)	BNC S-VIDEO, Plug(M) Plug, 12(F)	1-560-069-11 YC-30 V(3 m) 1-562-159-00
EXT KEY IN		BNC	BNC	1-560-069-11
GEN LOCK IN	1, 2	BNC	BNC	1-560-069-11
T1/CUE		BNC	BNC	1-560-069-11
T2		BNC	BNC	1-560-069-11
CONTROL PANEL		D-SUB, Plug 25P(F)	D-SUB, Plug 25P(M)	(*)
EDITOR		D-SUB, Plug 9P(F)	D-SUB, Plug 9P(M)	1-560-651-00

(*)This connector is attached to the cable of 10 m (1-696-660-11).

1-12. INPUT/OUTPUT SIGNALS OF CONNECTOR

PGM(Program)OUT COMPOSITE 1, 2

CONNECTOR: BNC
utput voltage: 1.0Vp-p (VBS), (Sync/burst: UC: 0.286Vp-p PAL: 0.3Vp-p)
utput impedance: 75Ω

PGM(Program)OUT Y/C 1, 2

ONNECTOR: S(Separates) terminal 4pin Connector (Female)

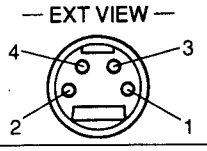

Pin No	Signal Name	Function	Specification
1	Y GND	Ground of Luminance Output	Y terminal Output voltage: 1.0Vp-p (VS) (Y Video: 0.714Vp-p,Sync: 0.286Vp-p).....NTSC (Y Video: 0.7Vp-p,Sync: 0.3Vp-p).....PAL Output impedance: 75Ω C terminal Output voltage: 0.681Vp-p.....NTSC 0.64Vp-p.....PAL (100/0/75/0 Color Bars) (Burst: 0.286Vp-p).....NTSC (Burst: 0.3Vp-p).....PAL Output impedance: 75Ω
2	C GND	Ground of Chrominance Output	
3	Y	Luminance Output	
4	C	Chrominance Output	

PGM(Program)OUT COMPONENT 1,2

ONNECTOR: Component Video Out 12pin Connector(Female)

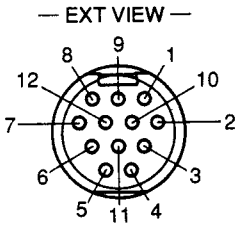

Pin No	Signal Name	Function	Specification
1	Y OUT	Luminance Output	Output voltage: 1.0Vp-p (VS) (Y Video: 0.714Vp-p, Sync: 0.286Vp-p).....NTSC (Y Video: 0.7Vp-p, Sync: 0.3Vp-p).....PAL Output impedance: 75Ω
2	GND	Luminance Output Common	
3	R-Y	Chrominance R-Y Output	Output voltage: 0.756Vp-p (100/0/75/0 Color Bars).....NTSC 0.525Vp-p (100/0/75/0 Color Bars).....PAL Output impedance: 75Ω
4	GND	R-Y Output Common	
5	B-Y	Chrominance B-Y Output	
6	GND	B-Y Output Common	
7 thru 12	——	——	——

KEY OUT

CONNECTOR: BNC
Output voltage: 1.0Vp-p (Sync signal is nothing.)
Output impedance: 75Ω

BLACK BURST OUT 1,2,3,4

CONNECTOR: BNC
Output voltage: Sync: 0.286Vp-p Burst: 0.286Vp-p.....NTSC
Sync: 0.3Vp-p Burst: 0.3Vp-p.....PAL
Output impedance: 75Ω

DSK(Down Stream Keyer)KEY IN 1, 2 + Through Out

(This connector is function to install the optional board, BKDF-502/502P.)
CONNECTOR:BNC
Input voltage: 0.7 through 1.0Vp-p (Sync signal is nothing)
or 1.0Vp-p (Sync: about 0.3Vp-p)
Input impedance: High impedance or 75Ω (with terminate a 75Ω ON/OFF switch)

DSK(Down Stream Keyer)VIDEO IN

(This connector is function to the optional board, BKDF-502/502P.)
CONNECTOR: BNC
① When the S102 DSK VIDEO SELECT of DA-63 board is "COMPOSITE" position.

Connector	Function	Specification
COMPOSITE/G/Y	Composite Input (Through out)	Input voltage: 1.0Vp-p (VBS), (Sync/Burst: 0.286Vp-p).....NTSC (Sync/Burst: 0.3Vp-p).....PAL Input Impedance: High impedance or 75Ω (with terminated 75Ω ON/OFF switch)
R/R-Y	———	———
B/B-Y	———	———

② When the S102 DSK VIDEO SELECT of the DA-63 board is "Y/R-Y/B-Y" position.

Connector	Function	Specification
COMPOSITE/G/Y	Y: Luminance Input	Input voltage: 1.0Vp-p (VS), (Sync: 0.286Vp-p).....NTSC (Sync: 0.3Vp-p).....PAL Input Impedance: High impedance or 75Ω (with terminated 75Ω ON/OFF switch)
R/R-Y	Color differential signal R-Y: Chrominance Input	Input voltage: 0.756Vp-p (100/0/75/0 Color Bars).....NTSC 0.525Vp-p (100/0/75/0 Color Bars).....PAL Input impedance: 75Ω
B/B-Y	Color differential signal B-Y: Chrominance Input	

③ When the S102 DSK VIDEO SELECTof the DA-63 board is "R/G/B" position.

Connector	Function	Specification
COMPOSITE/G/Y	G: RGB Signal G Input (with Sync)	Input voltage: 1.0Vp-p (G signal: 0.7Vp-p + Sync: 0.3Vp-p) Input impedance: High impedance or 75Ω (with terminated 75Ω ON/OFF switch)
R/R-Y	R: RGB Signal R Input	Input voltage: 0.7Vp-p Input impedance: 75Ω
B/B-Y	B: RGB Signal B Input	

VIDEO INPUTS COMPOSITE 1,2,3,4

CONNECTOR:BNC
Input voltage: 1.0Vp-p (VBS)
(Sync/Burst: 0.286Vp-p).....NTSC
(Sync/Burst: 0.3Vp-p).....PAL
Input impedance: 75Ω

VIDEO INPUTS Y/C 1, 2, 3, 4

CONNECTOR:S(Separates) terminal 4pin Connector (Female)

— EXT VIEW —

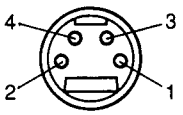

Pin No	Signal Name	Function	Specification
1	Y GND	Ground of Luminance Input	Y terminal input voltage: 1.0Vp-p (VS) (Y Video: 0.714Vp-p, Sync: 0.286Vp-p).....NTSC (Y Video: 0.7Vp-p, Sync: 0.3Vp-p).....PAL Input impedance: 75Ω C terminal input voltage: 0.681Vp-p (100/0/75/0 Color Bars) (Burst: 0.286Vp-p).....NTSC (Burst: 0.3Vp-p).....PAL Input impedance: 75Ω
2	C GND	Ground of Chrominance Input	
3	Y	Luminance Input	
4	C	Chrominance Input	

VIDEO INPUTS COMPONENT 1, 2, 3, 4

CONNECTOR: Component Video In 12pin Connector(Male)

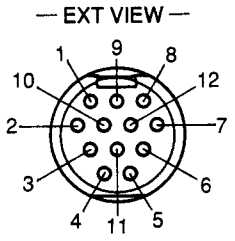

Pin No	Signal Name	Function	Specification
1	CPN Y	Luminance Input	Input voltage: 1.0 Vp-p (Y Video: 0.714Vp-p, Sync: 0.286Vp-p).....NTSC (Y Video: 0.7Vp-p, Sync: 0.3 Vp-p).....PAL Input impedance: 75Ω
2	GND	Luminance Input Common	
3	CPN V	Chrominance R-Y Input	Input voltage: 0.756Vp-p (100/0/75/0 Color Bars).....NTSC 0.525Vp-p (100/0/75/0 Color Bars).....PAL Input impedance: 75Ω
4	GND	R-Y Input Common	
5	CPN U	Chrominance B-Y Input	
6	GND	B-Y Input Common	
7 thru 9	——	——	——
10	GND	Ground	——
11 thru 12	——	——	——

EXT KEY IN

CONNECTOR: BNC
Input voltage: 0.7 through 1.0Vp-p (The voltage of Sync is nothing)
or 1.0Vp-p (Sync: about 0.3Vp-p)
Input impedance: 75Ω

GEN LOCK IN 1, 2 + Through Out

CONNECTOR: BNC
Input voltage: 0.43Vp-p (BB), (Sync/Burst: 0.286Vp-p) ...NTSC
(Sync: 0.3Vp-p Burst: 0.3Vp-p) ...PAL
Input impedance: High impedance or 75Ω (with terminated 75Ω ON/OFF switch)

T1/CUE, T2

CONNECTOR: BNC
Input voltage: TTL level
Input impedance: 75Ω

CONTROL PANEL(PROCESS UNIT SIDE)

CONNECTOR: D-SUB 25P(Female)

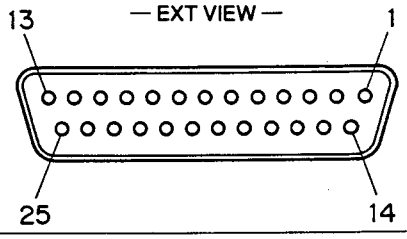

Pin No	Signal name	Function	Specification
1	GND	Frame Ground	Definition of A and B
2	DC CON	12V Output	
3	KRD+	Receive Data "B"	
4	GND	Receive Common	
5	KTD+	Transmit Data "B"	
6	GND	Transmit common	
7	RVD+	Transmit VD "B"	
8 thru 11	NOT USED	———	
12	GND	Ground	
13	GND	Ground	
14	DC CON	12V Output	
15	DC CON	12V Output	
16	KRD−	Receive Data "A"	
17	GND	Receive Common	
18	KTD−	Transmit Data "A"	
19	GND	Transmit Common	
20	RVD−	Transmit VD "A"	
21 thru 24	NOT USED	———	
25	GND	Frame Ground	

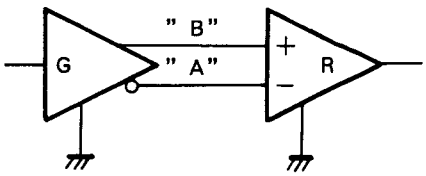

A < B → "1" (MARK)
A > B → "0" (SPACE)

CONTROL PANEL (CONTROL PANEL SIDE)

CONNECTOR: D-SUB 25P(Female)

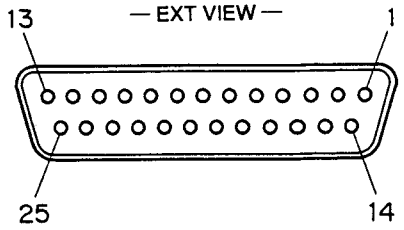

Pin No	Signal name	Function	Specification
1	FG	Frame Ground	Definition of A and B
2	+12 V	12 V Input	
3	MIT+	Transmit Data "B"	
4	GND	Transmit common	
5	RCV+	Receive Data "B"	
6	GND	Receive Common	
7	RVD+	Receive VD "B"	
8	NOT USED	———	
9	+12 V PS	ICP PASS 12 V INPUT	
10	+12 V PS	ICP PASS 12 V INPUT	
11	NOT USED	———	
12	GND	Ground	
13	GND	Ground	
14	+12 V	12 V Input	
15	+12 V	12 V Input	
16	MIT−	Transmit Data "A"	
17	GND	Transmit Common	
18	RCV−	Receive Data "A"	
19	GND	Receive Common	
20	RVD−	Receive VD "A"	
21 thru 24	NOT USED	———	
25	FG	Frame Ground	

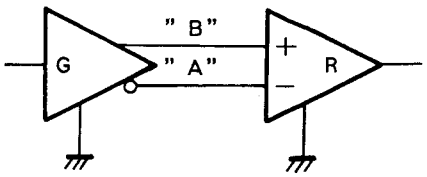

A < B → "1" (MARK)
A > B → "0" (SPACE)

EDITOR CONNECTOR

:ONNECTOR: D-SUB 9P(Female)

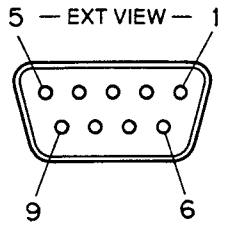

Pin No	Signal name	Function	Specification
1	GND	Frame Ground	Definition of A and B
2	XMIT–	Transmit "A"	
3	RCV+	Receive "B"	
4	GND	Receive Common	
5	NOT USED	———	
6	GND	Transmit Common	
7	XMIT+	Transmit "B"	
8	RCV–	Receive "A"	
9	GND	Frame Ground	

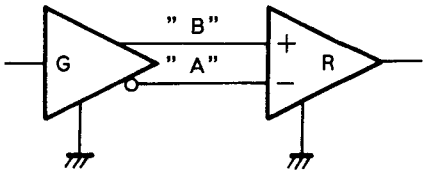

A < B → "1" (MARK)
A > B → "0" (SPACE)

1-13. EXPLAIN OF SWITCH/INDICATOR/ VOLUME

AD-76 BOARD (A side)

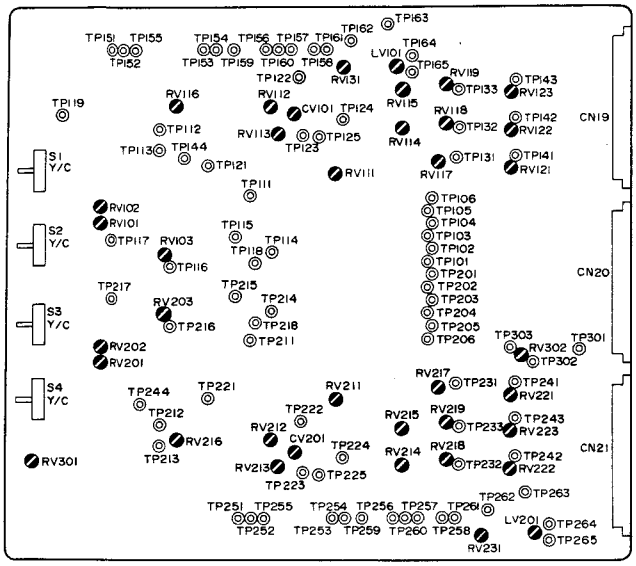

Volume

CV101(C7): A COLOR F LOCK trimmer capacitor
Adjust the A-CH chroma decoder color lock.

CV201(L7): B COLOR F LOCK trimmer capasitor
Adjust the B-CH chroma decoder color lock.

LV101(B10): A VFO BIAS coil
Adjust the A-CH VFO control voltage centering.

LV201(N13): A VFO BIAS coil
Adjust the B-CH VFO control voltage centering.

RV101(E2): A CPST Y GAIN control
Adjust the A-CH Y gain of the composite input.

RV102(E2): A CPST C GAIN control
Adjust the A-CH chroma level of the composite input.

RV103(F4): A APC LOCK control
Adjust the A-CH burst lock of the digital Y/C separated clock.

RV111(D8): A SEP Y GAIN control
Adjust the A-CH S input Y gain.

RV112(C7): A SEP C GAIN control
Adjust the A-CH chroma S input gain.

RV113(C7): A CPST & SEP HUE control
Perform the HUE adjustment of the A-CH composite signal and the S input signal.

RV114(C10): A CPST & SEP R-Y GAIN control
Adjust the A-CH R-Y gain of composite signal and the S input signal.

RV115(B10): A CPST & SEP B-Y GAIN control
Adjust the A-CH composite signal and the S input B-Y gain.

RV116(C4): A INT BURST LEVEL control
Adjust the internal genaration burst level when the A-CH is no signal.

RV117(D11): A CPNT Y GAIN control
Adjust the A-CH Y gain of component input.

RV118(C11): A CPNT R-Y GAIN control
Adjust the A-CH R-Y gain of component input.

RV119(B11): A CPNT B-Y GAIN control
Adjust the A-CH B-Y gain of the component input.

RV121(D12): A Y DC control
Adjust the A-CH Y pedestal DC of the A/D converter.

RV122(C12): A R-Y DC control
Adjust the A-CH R-Y DC of the A/D converter.

RV123(B12): A B-Y DC control
Adjust the A-CH B-Y DC of the A/D converter.

RV131(B9): A W HD PHASE control
Adjust the A-CH H timing of the memory writing.

RV201(J2): B CPST Y GAIN control
Ajust the B-CH Y gain of the composite input.

RV202(H2): B CPST C GAIN control
Adjust the B-CH chroma level of the composite input.

RV203(H4): B APC LOCK control
Adjust the B-CH burst lock of the digital Y/C separater clock.

RV211(K8): B SEP Y GAIN control
Adjust the B-CH Y gain of the S input signal.

RV212(L7): B SEP C GAIN control
Adjust the B-CH chroma gain of the S input signal.

RV213(L7): B CPST & SEP HUE control
Perform the HUE adjustment of the B-CH composite signal and the S input signal.

RV214(L10): B CPST & SEP R-Y GAIN control
Adjust the B-CH R-Y gain of the composite signal and the S input signal.

RV215(K10): B CPST & SEP B-Y GAIN control
Adjust the B-CH B-Y gain of the composite signal and the S input signal.

RV216(K4): B INT BURST LEVEL control
Adjust the internal genaration burst level when the B-CH is no input signal.

RV217(J11): B CPNT Y GAIN control
Adjust the B-CH Y gain of the component input signal.

RV218(L11): B CPNT R-Y GAIN control
Adjust the B-CH R-Y gain of the component input signal.

RV219(K11): B CPNT B-Y GAIN control
Adjust the B-CH B-Y gain of the component input signal.

RV221(J12): B Y DC control
Adjust the B-CH Y pedestal DC of the A/D converter.

nV222(K12): B R-Y DC control
Adjust the B-CH R-Y DC of the A/D converter.
V223(L12): B B-Y DC control
Adjust the B-CH B-Y DC of the A/D converter.
RV231(N12): B W HD PHASE control
Adjust the B-CH H timing of the memory writing.
V301(L1): EXT KEY CLIP control
Adjust the slice level of the TITLE (EXT KEY) input signal.
V302(J13): EXT KEY DELAY FINE control
Preform fine adjustment of the TITLE (EXT KEY) delay vlaue.

witch
S1(D1): VIDEO INPUT1
S2(F1): VIDEO INPUT2
3(H1): VIDEO INPUT3
4(K1): VIDEO INPUT4
(Input signal format selection) switch
Select the format of the signal for connecting to the VIDEO INPUTS connectors 1 through 4.
COMPOSITE: composite video signal
Y/C: Y/C video signal
COMPONENT:component video signal
When the unit is shipped, all of the switches are set to the COMPOSITE position.

CN-573 BOARD (A side)

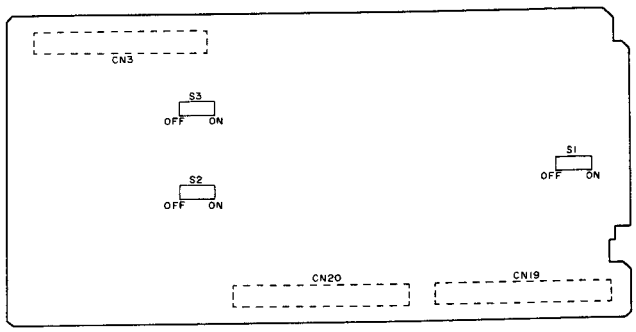

Switch
S1(E3): 75Ω terminated switch
This switch is GEN LOCK INPUT 75Ω terminated switch.
When the unit is shipped, this switch is set to the ON position.
S2(B3): 75Ω terminated switch
This switch is DSK VIDEO INPUT 75Ω terminated switch.
When the unit is shipped, this switch is set to the ON position.

S3(B2): 75Ω terminated switch
This switch is DSK KEY INPUT 75Ω terminated switch.
When the unit is shipped, this switch is set to the ON position.

DA-63 BOARD (A side)

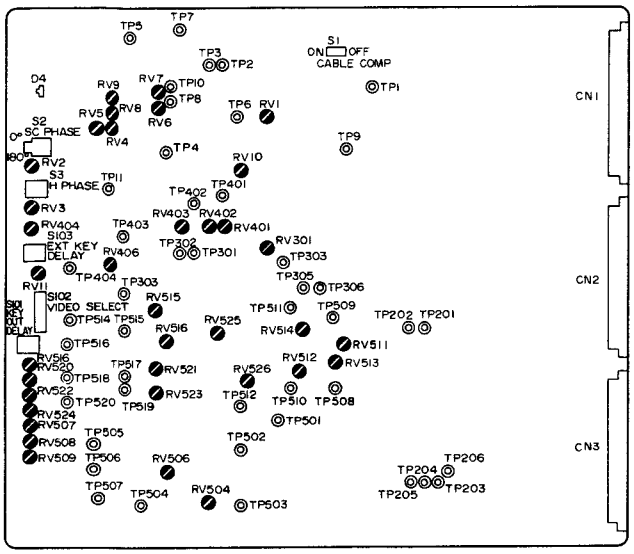

Indicater

D4(B14): GEN LOCK IN indicater (red)
This indicator shows if the external synchronizing signal (the black burst signal) is input to the GEN LOCK IN connector on the rear panel.

ON (Red light): GEN LOCK mode lights red when the external synchronizing signal (the black burst signal) is input to the GEN LOCK IN connecotor on the rear panel.
The synchronizing signal generator of this unit synchronizes to external synchronizing signal automatically.

OFF (light off): Lights off when the external synchronizing signal (the black burst signal) is not input to the GEN LOCK IN connector on the rear panel.
The synchronizing signal generator of this unit is the internal oscillator.

Volume

RV1(B8): INT SC FREQUENCY control
Adjust the SC frequency when internal signal oscillation of synchronized signal generator on this board.

RV2(D14): GEN LOCK SC PHASE FINE control
Perform the fine adjustment of the SC phase when the external synchronization.

RV3(E14): GEN LOCK H PHASE FINE control
Perform the fine adjutment of the H phase when external synchronization.

RV4(C12): INT CLAMP PULSE PHASE control
Adjust the phase of the internal generation clamp pulse.

RV5(C12): INT CLAMP PULSE WIDTH control
Adjust the width of the internal generation clamp pulse.

RV6(B11): PGM OUT (COMPOSITE,Y/C, COMPONENT) BLANKING WIDTH control
Adjust the blanking width of PGM OUT (COMPOSITE, Y/C, COMPONENT).

RV7(B11): PGM OUT (COMPOSITE, Y/C, COMPONENT) BLANKING PHASE control
Adjust the blanking phase of PGM OUT (COMPOSITE,Y/C, COMPONENT).

RV8(B12): BURST WIDTH control
Adjust the burst width of PGM OUT (COMPOSITE, Y/C) and B.B OUT.

RV9(B12): BURST PHASE control
Adjust the burst phase on PGM OUT(COMPOSITE,Y/C) and B.B OUT.

RV10(D9): INT SC PHASE control
Adjust the SC phase when the internal oscillation of synchronized signal generator on this board.

RV11(F14): DSK EXT KEY CLIP control
Adjust the clip level of signal for connecting the DSK KEY IN connector.
When the unit is shipped, this volume is set to the mechanical center position.

RV301(E8): ENCODER MODURATION AXIS control
Adjust so that the moduration are axes (the R-Y axis and the B-Y axis) are crossed prependicularly by encoding the PGM OUT (COMPOSITE, Y/C) and B.B OUT.

RV401(E9): B.B OUT BURST BALANCE control
Adjust so that the burst level of every B.B OUT line is same level.(for EK)

RV402(E10): B.B OUT SUB CARRIER LEAK BALANCE (B-Y) control
Adjust the sub carrier balance of the B.B OUT encoder B-Y axis.

RV403(E10): B.B OUT SUB CARRIER LEAK BALANCE(R-Y) control
Adjust the sub carrier balance of the B.B OUT encoder R-Y axis.(for EK)

RV404(E14): B.B OUT GAIN control
Adjust the gain value of the B.B OUT.
In fact this control is matched by burst level.

RV406(F12): B.B OUT SYNC LEVEL control
Adjust the sync level of the B.B OUT.

RV504(L10): PGM OUT(COMPOSITE,Y/C) SYNC LEVEL control
Adjust the sync level of the PGM OUT(COMPOSITE,Y/C).

RV506(L11): PGM OUT(COMPOSITE,Y/C) CHROMA GAIN control
Adjust the chroma gain value of the PGM OUT (COMPOSITE, Y/C).
In fact the volume is matched by level of the R-Y axis.

RV507(K14): PGM OUT(COMPOSITE) GAIN control
Adjust the gain value of the PGM OUT(COMPOSITE).
In fact the volume is matched by the luminance level.

RV508(K14): PGM OUT(Y/C)Y GAIN control
Adjust the gain value of the PGM OUT (Y/C) luminance signal(Y).

V509(K14): PGM OUT(Y/C)C GAIN control
Adjust the gain value of the PGM OUT(Y/C) chroma signal(C).

V511(H7): PGM OUT(COMPOSITE,Y/C)SUB CARRIER LEAK BALANCE(R-Y) control
Adjust the sub carrier balance of the PGM OUT(COMPOSITE,Y/C) encoder R-Y axis.

V512(H8): PGM OUT(COMPOSITE,Y/C) B-Y AXIS GAIN control
Adjust the gain value of the PGM OUT (COMPOSITE,Y/C) encoder B-Y axis.

V513(H7): PGM OUT (COMPOSITE,Y/C) BURST BALANCE control
Adjust so that the burst level of every PGM OUT line (COMPOSITE,Y/C) is same level. (for EK)

RV514(H8): PGM OUT(COMPOSITE,Y/C)SUB CARRIER LEAK BALANCE(B-Y) control
Adjust the sub carrier balance of the PGM OUT (COMPOSITE,Y/C) encoder B-Y axis.

RV515(G11): KEY OUT DELAY FINE control
Perform the fine adjustment of the delay value of the KEY OUT.
In fact turn this volume mechanical center.

RV516(H14): KEY OUT GAIN control
Adjust the gain value of the KEY OUT.

V518(H11): PGM OUT(COMPONENT) SYNC LEVEL control
Adjust the sync level of the PGM OUT (COMPONENT) Y signal.

V520(J14): PGM OUT(COMPONENT)Y GAIN control
Adjust the gain value of the PGM OUT(COMPONENT) Y signal.

V521(H11): PGM OUT(COMPONENT)R-Y DELAY control
Adjust the delay value of the PGM OUT (COMPONENT) Y signal corresponding to the R-Y signal.

V522(J14): PGM OUT (COMPONENT)R-Y GAIN control
Adjust the gain value of the PGM OUT(COMPONENT) R-Y signal.

V523(J11): PGM OUT(COMPONENT)B-Y DELAY control
Adjust the delay value of the PGM OUT(COMPONENT) B-Y signal corresponding to Y signal.

V524(J14): PGM OUT(COMPONENT)B-Y GAIN control
Adjust the gain value of the PGM OUT(COMPONENT) B-Y signal.

V525(H10): PGM OUT(COMPOSITE,Y/C)BURST LEVEL control
Adjust the burst level of the PGM OUT (COMPOSITE,Y/C).

RV526(H9): PGM OUT(COMPOSITE,Y/C)Y/C DELAY control
Adjust the delay value of the PGM OUT(COMPOSITE,Y/C) luminance signal (Y) corresponding to the chroma signal(C).
In fact turn this volume the middle of left fully and mechanical center.

Switch

S1(A7): CABLE COMPENSATION ON/OFF switch
This switch is the GAIN lower compensation for the long cable.
ON: The GAIN of the input signal (GEN LOCK signal) rises about 6dB.
When the unit is shipped, this switch is set to the OFF position.

S2(C14): GEN LOCK SC PHASE COARSE (0° 180°)switch
Change the setting reverses the external sync SC phase by about 180°.
When the unit is shipped, this switch is set to the "0°" position.

S3(D14): GEN LOCK H PHASE COARSE ADJ. switch
Perform the tentative adjustment of external sync H phase.
The H phase can be changed in sixteen steps with units of about 280ns.
When the unit is shipped, this switch is set to the 3 position.

S101(H14): KEY OUT DELAY COARSE ADJ. switch
Adjust the delay value of the KEY OUT corresponding to the PGM OUT.
The delay value can be changed in sixteen steps with units of about 70ns.
When the unit is shipped, this switch is set to the "5" position.

S102(G14): DSK VIDEO FORMAT SELECT switch
This switch can be changed to match the format of signal which is connected to the DSK VIDEO IN connector.
COMPOSITE: composite video signal
Y/R-Y/B-Y: luminance Y signal and color difference signal(R-Y/B-Y)
R/G/B: RGB signal
When the unit is shipped, this switch is set to the R/G/B position.

S103(F14): DSK EXT KEY DELAY ADJ.switch
Adjust the delay value of the DSK KEY IN corresponding to the DSK VIDEO IN.
The delay value can be changed in sixteen steps with units of about 70ns.
When the unit is shipped, this switch is set to the "6" position.

FM-29 BOARD (A side)

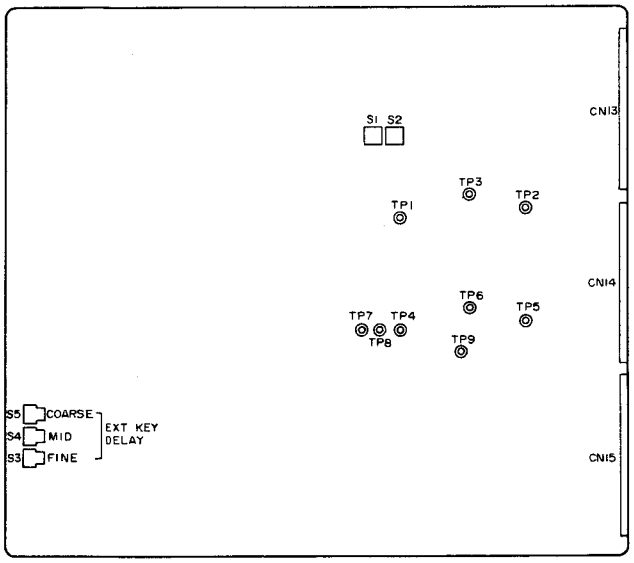

Switch

S1(H3): MEMORY LIGHT TIMING (FINE) switch
Adjust the timing of level direction memory writing of frame synchro memory.
When the unit is shipped, this switch is set to the following position.
UC : 2
EK : 6
As the switch is set to suitable position when the unit is shipped, do not touch the swtich.

S2(J3): MEMORY LIGHT TIMING (COARSE) switch
Adjust the timing of level direction memory writing of frame synchro memory.
When the unit is shipped, this switch is set to the following position.
UC : 4
EK : 4

S3(A10): TITLE EXT KEY DELAY (FINE) switch
Adjust the delay value of the EXT KEY in the TITLE mode.
When the unit is shipped, this switch is set to the following position.
UC : D
EK : E

S4(A9): TITLE EXT KEY DELAY (MED) switch
Adjust the delay value of the EXT KEY in the TITLE mode.
When the unit is shipped, this switch is set to the following position.
UC : 6
EK : 5

S5(A9): TITLE EXT KEY DELAY (COARSE) switch
Adjust the delay value of the EXT KEY in the TITLE mode.
When the unit is shipped, this switch is set to the following position.
UC : 6
EK : 6

LE-55 BOARD (A side)

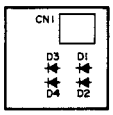

Indicator

D1: POWER indicator (Yellow)
Lights when the Power is turned on.

D2: POWER indicator (Yellow)
Lights when the Power is turned on.

D3: POWER indicator (Yellow)
Lights when the Power is turned on.

D4: POWER indicator (Yellow)
Lights when the Power is turned on.

PU-78 BOARD (A side)

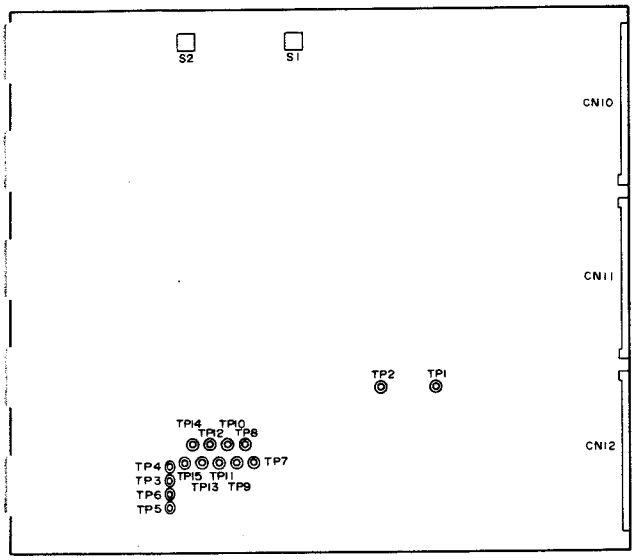

witch

1(E1): PAGE TURN LIGHTING POSITION switch
Adjust the position of the page lighting.
When the unit is shipped, the switch is set to the "3" position.
Do not touch the switch for it is set suitable position when the unit is shipped.

2(C1): PAGE TURN LIGHTING POSITION switch
Adjust the position of the page lighting.
When the unit is shipped, the switch is set to the "9" position.
Do not touch the switch for it is set suitable position when the unit is shipped.

SY-172 BOARD (A side)

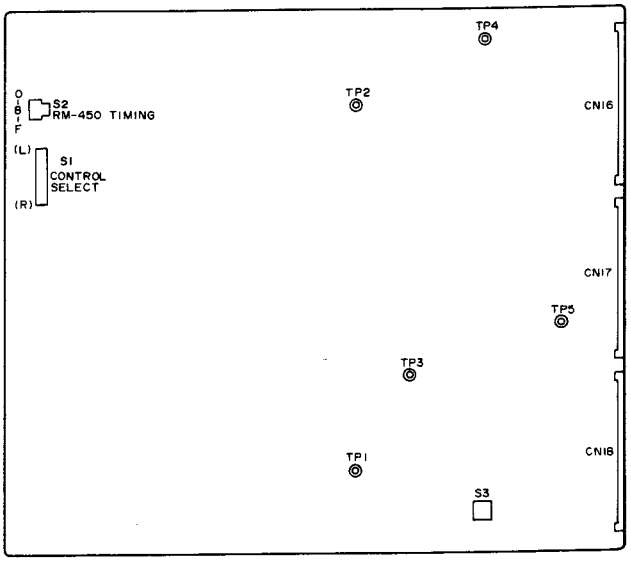

Switch

S1(A4): SELECT EDITING CONTORL UNIT switch
Select the editing control unit.(BVE-600, RM-450, ONE-GPI, BVE-900 and BVS-3000)
When the unit is shipped, the switch is set to the "BVE-900" posion.

S2(A3): FREEZE TIMING switch
Adjust the freeze point, if DFS-500 with RM-450.
When the unit is shipped, the switch is set to the "8" position.

S3-1(L10): FREEZE switch (When changing the cross point)
ON:2 Frames OFF:0 Frame
When the unit is shipped, the switch is set to the ON position.

S3-2(L10): SET UP switch
ON:7.5% OFF: 0%
When the unit is shipped, the switch is set to the OFF position.

S3-3(L10): COLOR-MATTE COMPENSATION switch
ON:Illegal compensation
OFF:Limit compensation
When the unit is shipped, the switch is set to the OFF position.

S3-4(L10): FIELD FREEZE switch
ON:Odd Field OFF:Even Field
When the unit is shipped, the switch is set to the OFF position.

(NOTE1) If the input signal is asynchronous, S3-1 is set definitely to ON positon.

(NOTE2) If the editing control unit is BVE-600, S3-4 is set definitely to OFF positon.

1-14. NOTES ON SPARE PARTS

1-14-1. Notes on Spare Parts

(1) Safety Related Cmponents Warning

Components marked with ⚠ on the schematic diagrams, exploded views and electrical spare parts list are critical to safe operation.

Replace these components with Sony parts whose part numbers appear in this manual or in service bulletins and service manual supplements published by Sony.

(2) Standardization of Parts

Spare parts supplied from Sony Parts Center may not always be identical with the parts actually in use due to accommodating the improved parts and/or engineering changes or standardization of genuine parts.

This manual's exploded views and electrical spare parts list indicate the part numbers of the standardized genuine parts at present.

(3) Stock of Part

Parts marked with "o" in the SP(Supply code)column of the spare parts list are not normally required for routine service work. Orders for parts marked with "o" will be processed, but allow for additional time for delivery.

(4) Units for Capacitors, Inductors and resistors

The following units may be assumed in schmatic diagrams, electrical parts list and exploded views unless otherwise specified.

Capacitor: μ F
Inductor : μ H
Resistor : Ω

1-14-2. Replacement of Chip Parts

Required Tools

Soldering iron : 20W
If possible, use a soldering-iron tip heatcontroller set to 270 ± 10°C.
Braided wire : Solder Taul or equivalent
Sony part No. 7-641-300-81
Solder : 0.6mm dia. is recommended.
Tweezers

Soldering Conditions

Soldering iron temperature : 270 ± 10°C
Soldering time : Less than 2 seconds per pin

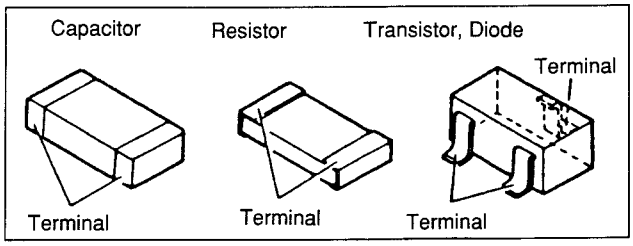

Replacement of Resistor and Capacitor

1. Place the soldering-iron tip onto the chip part and heat it up until the solder is melted. When the solder is melted, slide the chip part aside.
2. Make sure that there is no pattern peeling, damage and/or bridge around the desoldering position.
3. After removing the chip part, presolder the area, in which the new chip part is to be placed, with a thin layer of solder.
4. Place new chip part in the desired position and solder both ends.

NOTE: Do not use a chip part again once it has been removed.

Replacement of Transistors and Diodes

1. Cut the terminals of the chip part with nippers.
2. Remove the cut leads with soldering iron as above.
3. Make sure that there is no pattern peeling, damage and/or bridge around the desoldering positions.
4. After removing the chip part, presolder the area, in which the new chip part is to be placed, with a thin layer of solder.
5. Place new chip part in the desired position and solder the terminals.

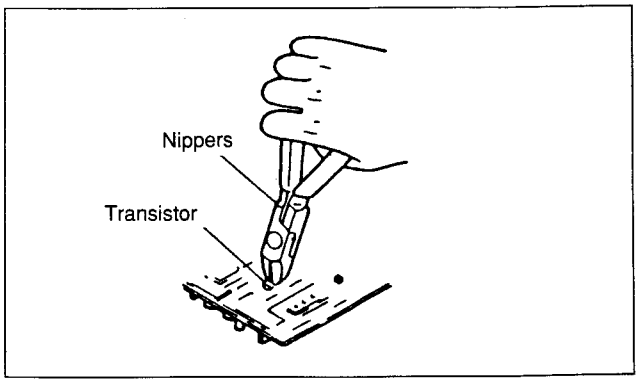

Replacement of ICs

1. Using the braided wire, "SOLDER TAUL" (Sony Part No. 7-641-300-81), remove the solder around the pins of the IC-chip to be removed.
2. While heating up the pins, remove the pins one by one using sharp-pointed tweezers.
   Make sure that there is no pattern peeling, damage and/or bridge around the desoldering position.
4. After removing the chip part, presolder the area, in which the new chip part is to be placed, with a thin layer of solder.
5. Place new chip part in the desired position and solder the pins.

1-14-3. Removal of PLCC IC

PLCC socket Extracion Tool
Sony Part No. J-6035-070-A
This extraction tool is useful for extracting the IC (PLCC type) inserted into an IC socket, and fits all sizes of ICs from 20 pins through 124 pins.

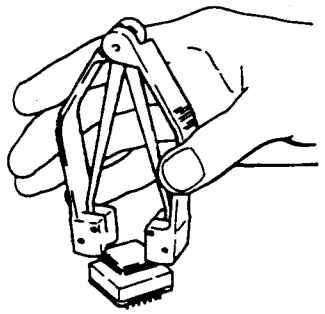

NOTE: Do not try to pull chip carrier out of sccket and let the tool action pull it out. Do not squeeze harder than necessary, only enough that the tool action occurs.

[How to use the Extracion Tool]

1. Spread or compress the tool legs so the tongs will fit into the solts of the chip carrier socket.

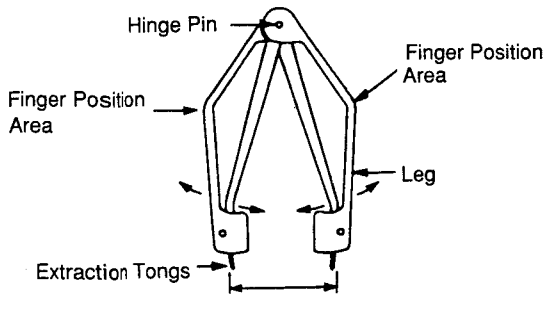

2. Insert the tool tongs into the slots of the carrier socket. Puch fully in so that the tool butts on the socket at "A".

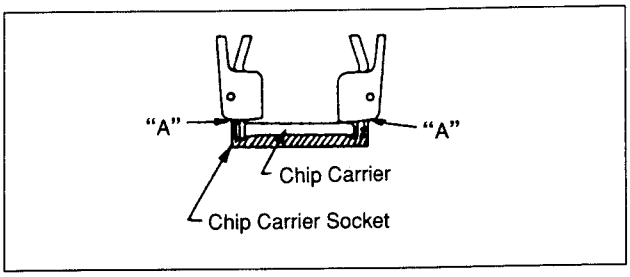

3. Place the thumb and the first and second finger on the ribbed area of the tool. Maintain a small downward force to keep the tool butted on the socket.
   Squeeze the thumb and finger together so that the tool legs tend to straighten.
   This action will draw the chip carrier out of the socket and grip it within the tool legs.
   Maintain the squeezing action so as to hold the chip in the tool, hold the tool over your other hand and relax the squeeze. The chip will fall out of the tool and into your hand.

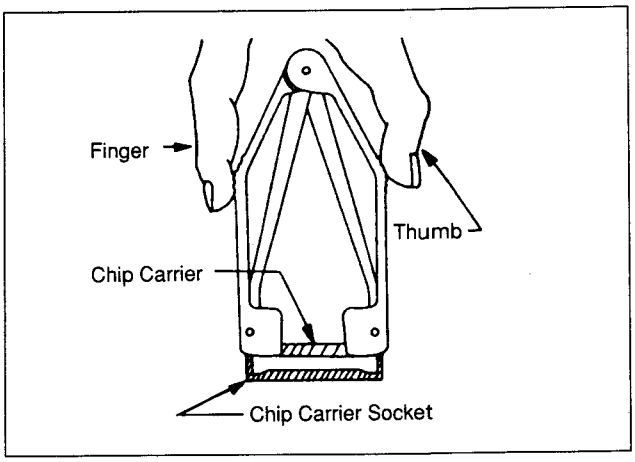

1-14-4. Replacement of Backup Battery

DFS-500 has a backup battery (Nickel-Cadmium Battery) on the SY-172 board.
This backup battery can register the settings on the control panel (snap shot) and store the effets created by user (user program).
Backup Battery: Nickel-Cadmium Battery
Sony Parts No. 1-528-202-11

NOTE: This backup battery is charged automatically on normal operation for about eight hour. If it is not used for long time (about more than one month), the backup battery consumes. As a resalt, the following setting (1) through (4) and data is disappeared, and they are initialized. At that time, charge the backup battery.

(1) Resume function (The setting recovery when turning the power OFF.)
(2) Data of user program
(3) Data of snap shot
(4) Direct pattern assign function

If the unit serves for about five year, the backup battery should be replaced. At this time, the following setting (1) through (4) and data is disappeard, and they are initialized. After replacement, charge the backup battery.

Replacement Procedure

① Remove eight screws (+PTTWH 3 × 6), and remove the shield plate.
② Unsolder two soldering parts, and replace the backup battery.
③ After replacing the backup battery, and solder it.

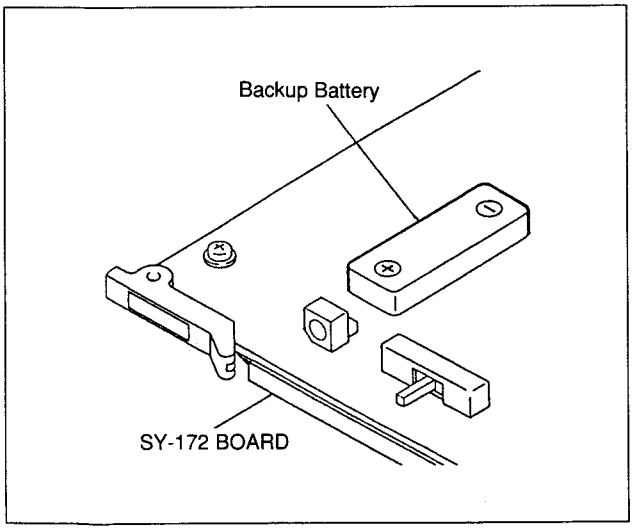

1-14-5. Replacement of Fuse

The fuse is mounted on the switching regurator. This fuse melted when the too much electric current flows by unusual instrument.
Before replacing the fuse, check the trouble of fuse.

Replacement Procedure

Before replacement of Fuse, take out the cause of short for unit.

① Remove the top panel. (Refer to "Section 1-1 REMOVAL OF CABINET" Top Panel.)
② Remove the fuse on the switching regurator from the holder.
③ Replace a new fuse.
Fuse: (for UC) GGL10 250V10A
Sony parts No. 9-903-804-01
Fuse: (for EK) S506-6.3A COLOR
Sony parts No. 9-903-806-01

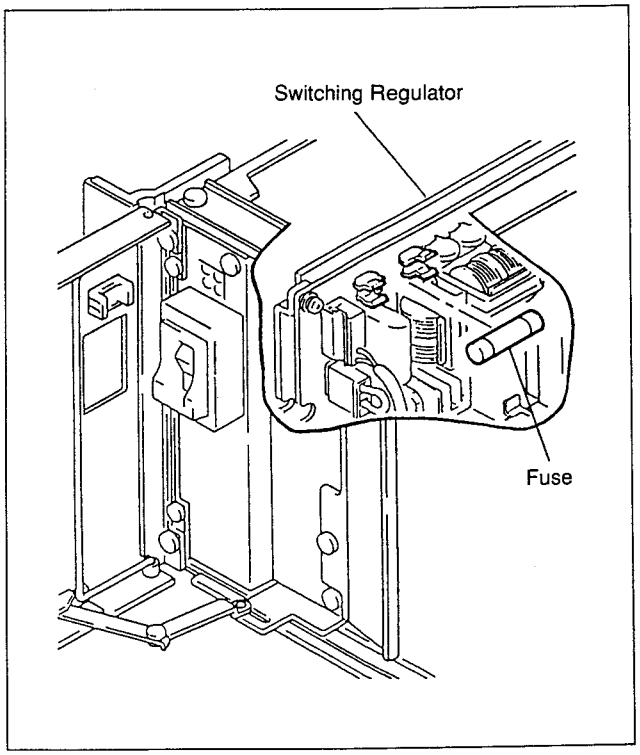

1-15. TIMING CHART

1-15-1. System Timing

REFERENCE: PGM OUT (COMPOSITE)

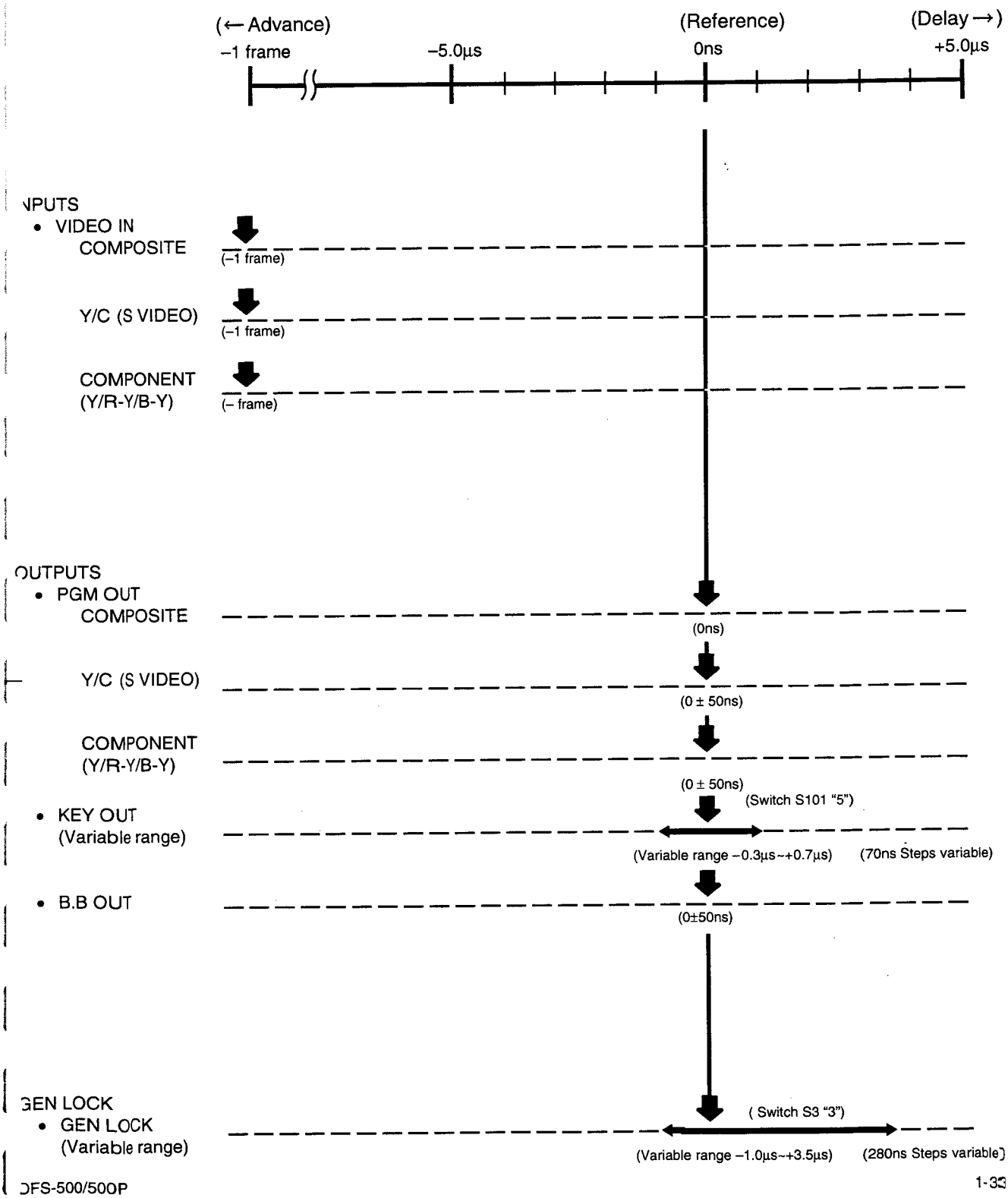

1-15-2. Timing of TITLE and DSK (Video Phase)

Test point: PGM OUT (COMPOSITE)

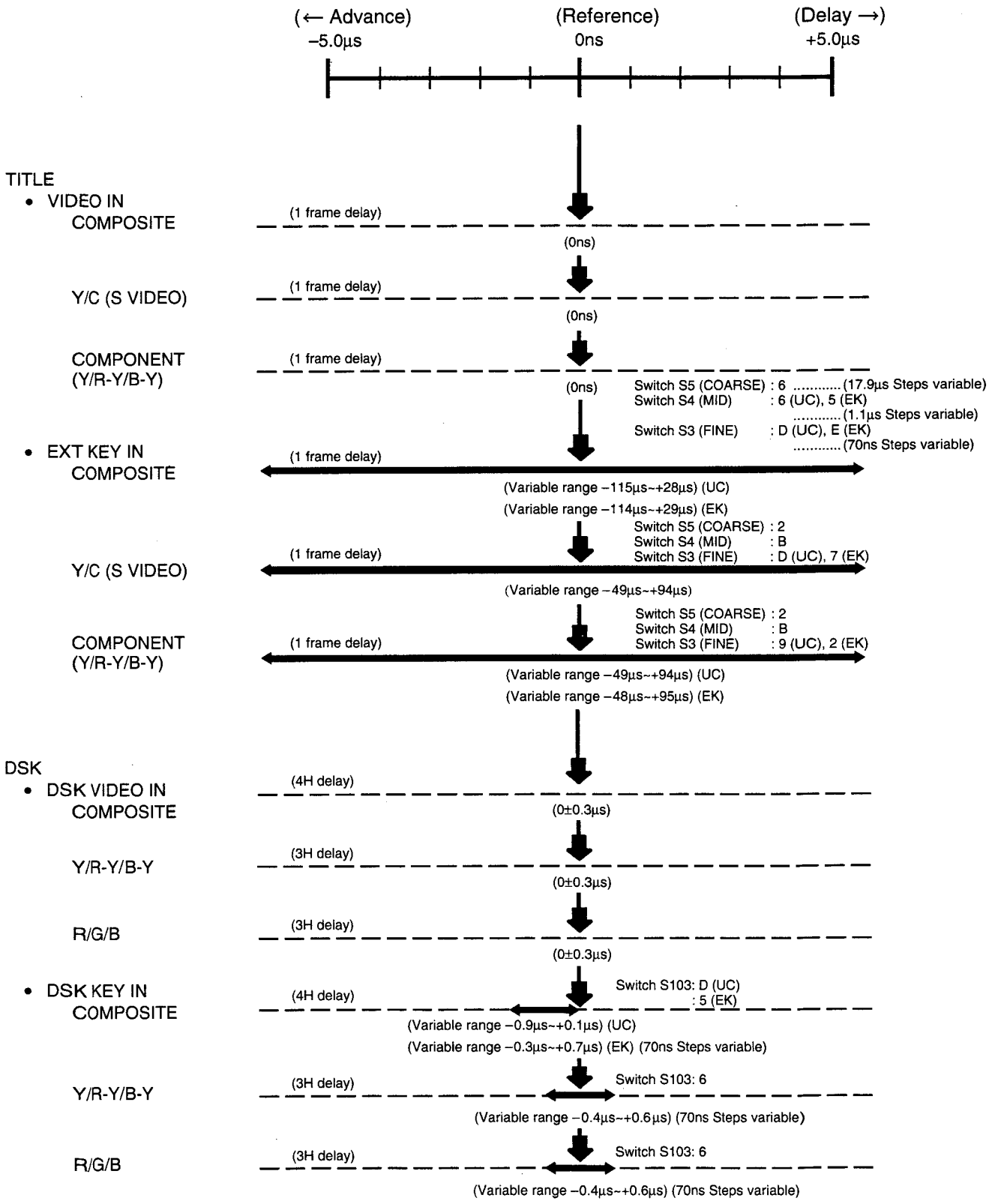

SECTION 2
DIAGNOSTIC

2-1. FLOW CHART

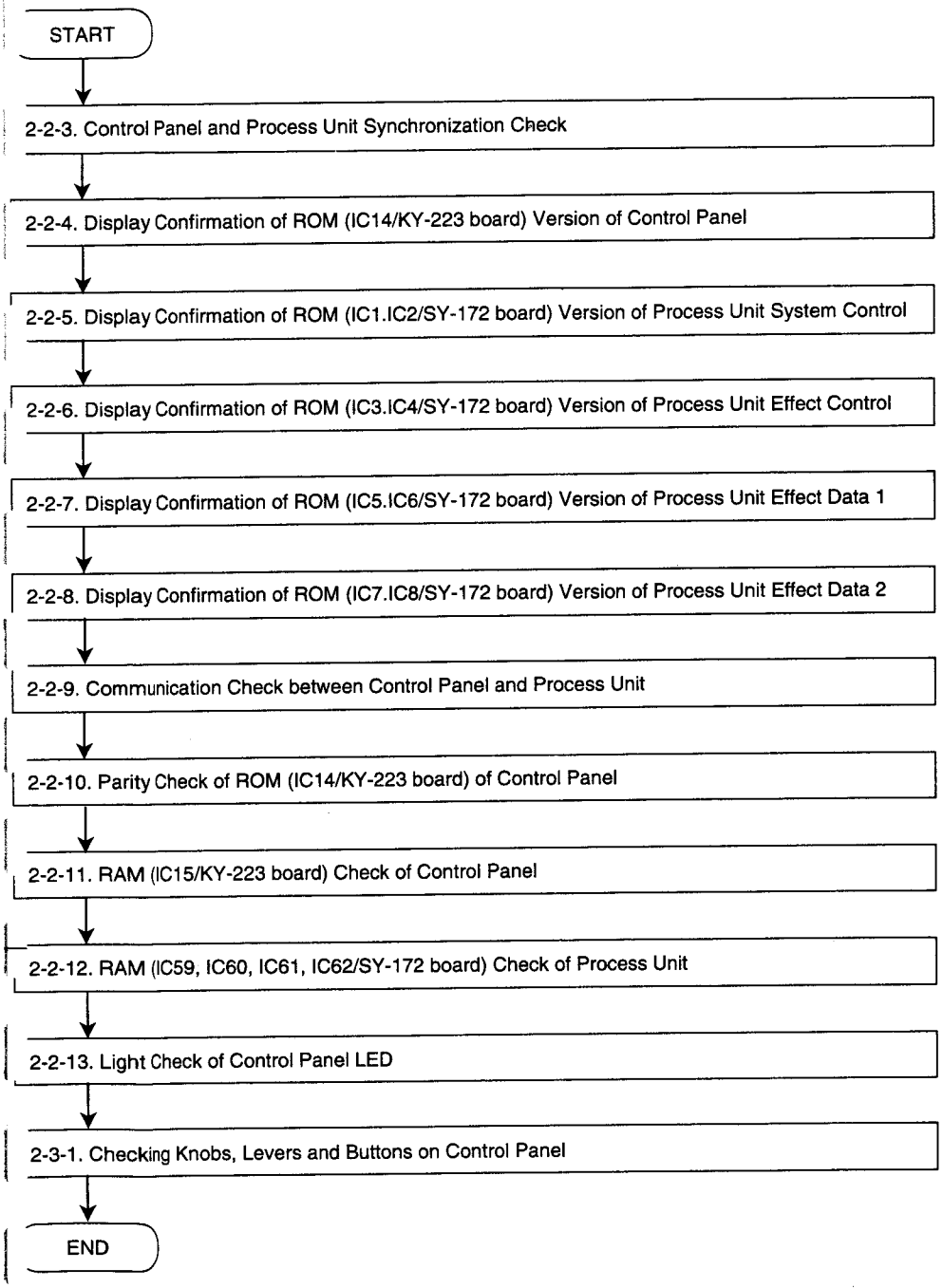

2-2. CHECK MODE

If any error occurs at power on or during normal operation, the error number is displayed in the PATTERN NUMBER window.

Buttons and displays that are referred in the following check procedures are labelled as shown below.

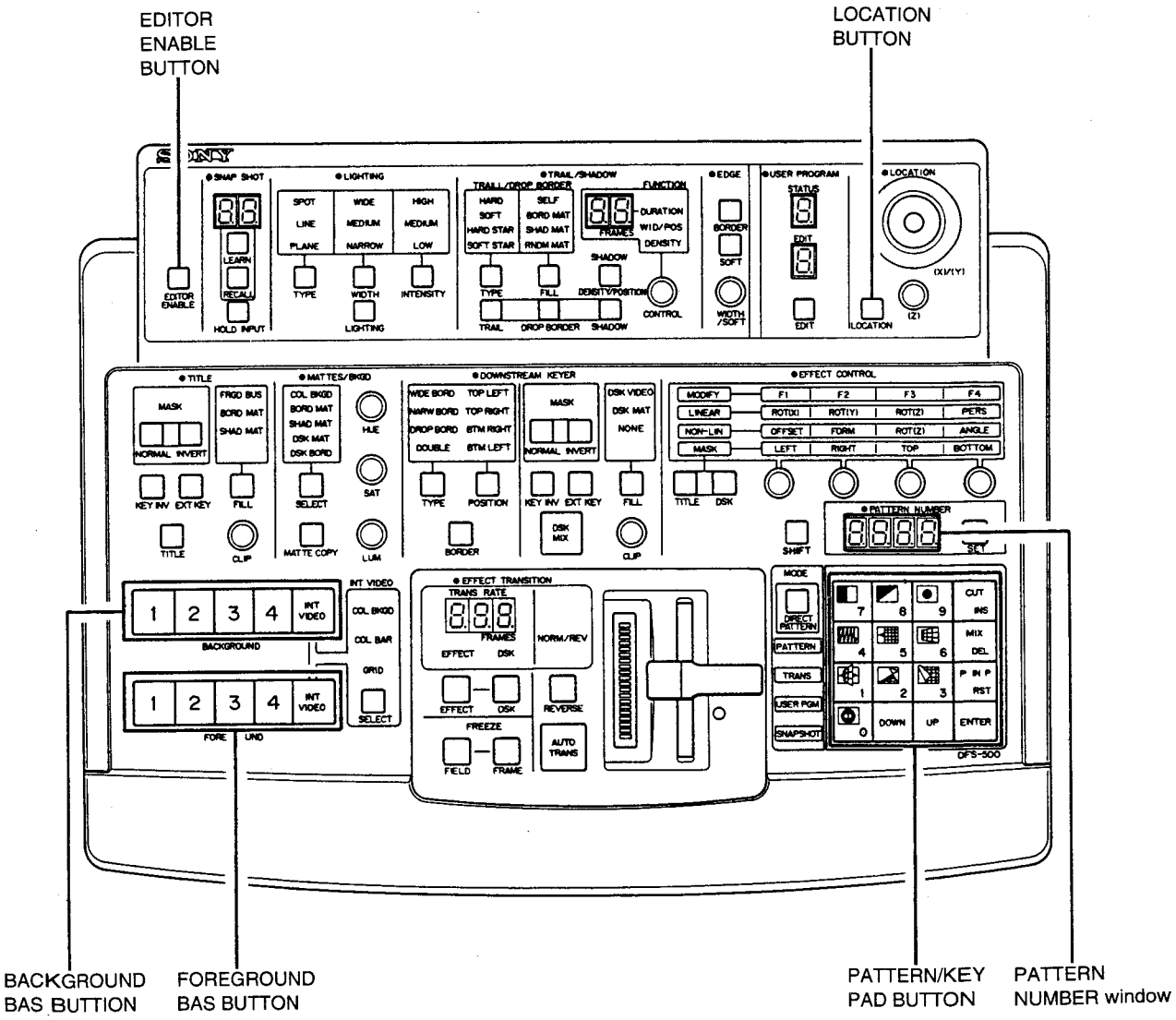

⌐-2-1. Countermeasures for Error Messages

PATTERN NUMBER window	Operation	Cause of error	Countermeasure
Er01	During normal operation	The vertical sync signal is not being sent from main unit to the control panel. (The control panel works while synchronizing to the vertical sync signal that is supplied from main unit.)	Possible fault in the SY-172 board, the DA-63 board or the cable.
Er02	① At power on ② During normal operation	Fault in communications between the main unit and the control panel.	Possible fault in the SY-172 board or the cable.
Er10	① At power on ② During normal operation	Abnormal parity in the control panel ROM (IC14/KY-223 board) of the KY-223 board.	Replace the control panel ROM (IC14) of the KY-223 board.
Er20	① At power on ② During normal operation	Abnormality in the control panel RAM (IC15/ KY-223 board) of the KY-223 board.	Replace the control panel RAM (IC15) of the KY-223 board.
Er40	At power on	Abnormality in the RAMs (IC59,60,61,62) of the main unit (SY-172 board).	Replace the RAMs (IC59,60,61,62) of the main unit (SY-172 board).

OTE: If two or more errors occur at the same time, the sum of the various error numbers is displayed.

·2-2. Backup Memory Warnings

Backup memory data is checked at power on. If abnormality is found, the memory is initialized automatically. At the same time, the warning and the pattern number are displayed alternatively in the ATTERN NUMBER window. Press the ENTER button of the Key Pad block to clear the warning and :turn to the normal operation condition.

PATTERN NUMBER window	Meaning
bu01	The memory of the user program effect is faulty. It is initialized automatically.
bu02	The snap shot memory is faulty. It is initialized automatically.
bu04	The memory of the direct pattern assignment is faulty. It is initialized automatically.
bu10	The memory to recover (resume function) the default in power OFF is faulty. It is initialized automatically.

NOTE: If two or more abnormality occur at the same time, the sum of the various warning numbers is displayed.

2-2-3. Control Panel and Process Unit Synchronization Check

The control panel works while synchronizing to the vertical sync signal that is supplied from the main unit.
The process unit checks all the time during operation that the sync signal is being sent correctly to the control panel.

Execution method during operation	Confirmation item
It is checked all the time during operation.	• PATTERN NUMBER window 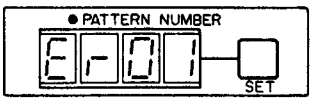 • If there is any abnormality, error is displayed.
Cause • Vertical sync signal is not sent from the main unit to the control panel correctly. (The control panel works while synchronizing to the vertical sync signal that is supplied from main unit.)	
Operator action • Possible fault in the SY-172 board, the DA-63 board or the cable.	

2-2-4. Display Confirmation of ROM (IC14/KY-223 board) Version of Control Panel

ROM (IC14) version of the KY-223 board is displayed.
It is confirmed whenever power is turned on.

Execution method during operation	Confirmation item
While pressing the BACKGROUND 1 and the FOREGROUND 1, press the LOCATION.	• KEY PAD buttons light in the shape of letter C. (buttons 1-4 and 7-9) 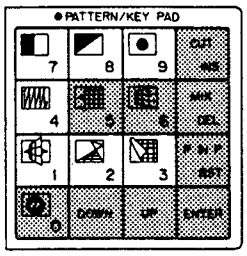 • Check that the version number X.XX is displayed on the PATTERN NUMBER window. • At this time, all other LEDs light off. 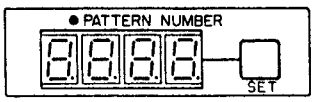 • Press the ENTER on the KEY PAD button to restore normal operation.

2-5. Display Confirmation of ROM (IC1. IC2/SY-172 board) Version of Process Unit System Control

ROM (IC1. IC2) version of the SY-172 board is displayed.

Execution method during operation	Confirmation item
While pressing the BACKGROUND 1 and the FOREGROUND 2, press the LOCATION.	• KEY PAD buttons light in the shape of letter C. (buttons 1-4 and 7-9) 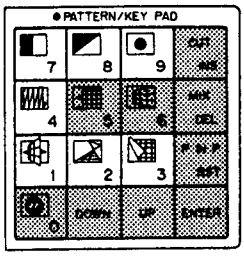 • Check that the version number X.XX is displayed on the PATTERN NUMBER window. • At this time, all other LEDs light off. 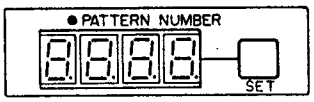 • Press the ENTER on the KEY PAD button to restore normal operation.

2-6. Display Confirmation of ROM (IC3.IC4/SY-172 board) Version of Process Unit Effect Control

ROM (IC3.IC4) version of the SY-172 board is displayed.

Execution method during operation	Confirmation item
While pressing the BACKGROUND 1 and the FOREGROUND 3, press the LOCATION.	• KEY PAD buttons light in the shape of letter C. (buttons 1-4 and 7-9) 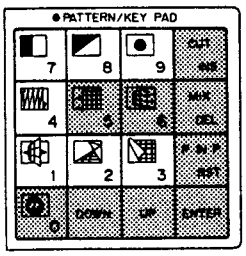 • Check that the version number X.XX is displayed on the PATTERN NUMBER window. • At this time, all other LEDs light off. 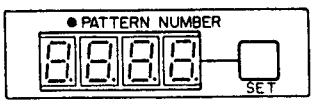 • Press the ENTER on the KEY PAD button to restore normal operation.

2-2-7. Display Confirmation of ROM (IC5.IC6/SY-172 board) Version of Process Unit Effect Data 1

ROM (IC5.IC6) version of the SY-172 board is displayed.

Execution method during operation	Confirmation item
While pressing the BACKGROUND 1 and the FOREGROUND 4, press the LOCATION.	• KEY PAD buttons light in the shape of letter C. (buttons 1-4 and 7-9) 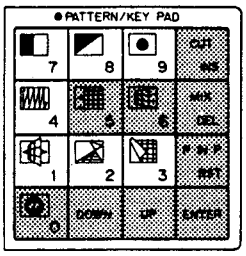 • Check that the version number X.XX is displayed on the PATTERN NUMBER window. • At this time, all other LEDs light off. 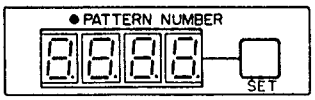 • Press the ENTER on the KEY PAD button to restore normal operation.

2-2-8. Display Confirmation of ROM (IC7.IC8/SY-172 board) Version of Process Unit Effect Data 2

ROM (IC7.IC8) version of the SY-172 board is displayed.

Execution method during operation	Confirmation item
While pressing the BACKGROUND 1 and the INT VIDEO of the FOREGROUND, press the LOCATION.	• KEY PAD buttons light in the shape of letter C. (buttons 1-4 and 7-9) 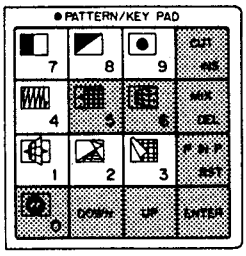 • Check that the version number X.XX is displayed on the PATTERN NUMBER window. • At this time, all other LEDs light off. 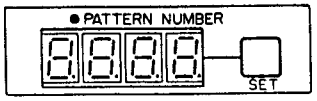 • Press the ENTER on the KEY PAD button to restore normal operation.

2-2-9. Communication Check between Control Panel and Process Unit

Communication between the control panel and process unit is checked.
In this check, the communication check command is sent from the control panel to the process unit.
Then, it is checked if a response command is returned within the specified time.
It is checked whenever power is turned on.

Execution method during operation	Confirmation item
While pressing the BACKGROUND 2 and the FOREGROUND 3, press the LOCATION.	• KEY PAD buttons light in the shape of letter C. (buttons 1-4 and 7-9) 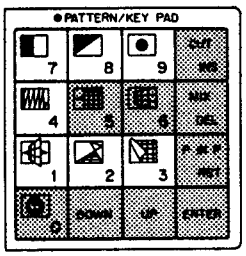 • Check that the version number STATUS is displayed on the PATTERN NUMBER window. • At this time, all other LEDs light off. 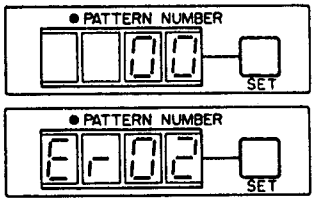 ➡Normal ➡Abnormal • Press the ENTER on the KEY PAD button to restore normal operation.
Cause • Communication between the control panel and the process unit is not established correctly.	
Operator action • Possible fault in the DA-63 board, the cable, etc.	

2-2-10. Parity Check of ROM (IC14/KY-223 board) of Control Panel

Parity of KY-223 board ROM (IC14) is checked.
It is checked whenever power is turned on.

Execution method during operation	Confirmation item
While pressing the BACKGROUND 3 and the FOREGROUND 1, press the LOCATION.	• KEY PAD buttons light in the shape of letter C. (buttons 1-4 and 7-9) 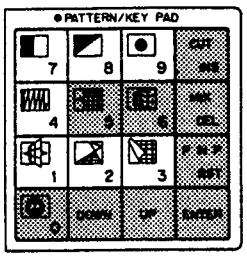 • Check that the version number STATUS is displayed on the PATTERN NUMBER window. • At this time, all other LEDs light off. 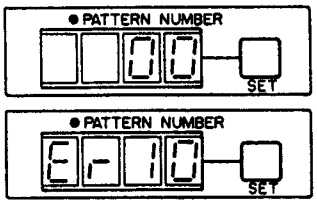 →Normal →Abnormal • Press the ENTER on KEY PAD button to restore normal operation.
Cause • Parity of KY-223 board ROM (IC14) is abnormal.	
Operator action • Replace the KY-223 board ROM (IC14).	

2-2-11. RAM (IC15/KY-223 board) Check of Control Panel

RAM (IC15) on the KY-223 board is checked.
is checked whenever power is turned on.

Execution method during operation	Confirmation item
While pressing the BACKGROUND 3 and the FOREGROUND 2, press the LOCATION.	• KEY PAD buttons light in the shape of letter C. (buttons 1-4 and 7-9) 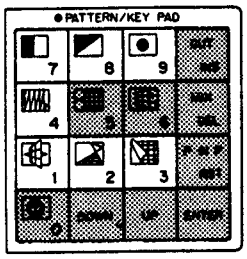 • Check that the version number STATUS is displayed on the PATTERN NUMBER window. • At this time, all other LEDs light off. 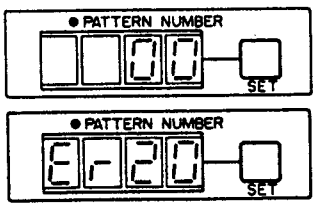 →Normal →Abnormal • Press the ENTER on KEY PAD button to restore normal operation.
Cause • Parity of KY-223 board RAM (IC15) is abnormal.	
Operator action • Replace the KY-223 board RAM (IC15).	

2-2-12. RAM (IC59, IC60, IC61, IC62/SY-172 board) Check of Process Unit

AMs (IC59,IC60,IC61,IC62/SY-172 board) on the process unit is checked.
is checked whenever power is turned on.

Execution method during operation	Confirmation item
	• PATTERN NUMBER window 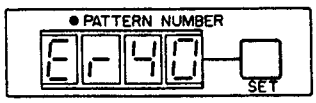 • If there is any abnormality, error is displayed as shown above.
Cause • RAMs (IC59,IC60,IC61,IC52/SY-172 board) on the process unit is abnormal.	
Operator action • Replace the RAMs (IC59, IC60, IC61, IC62) on the process unit SY-172 board.	

2-2-13. Light Check of Control Panel LED

Light all the LEDs on the control panel one by one sequentially.

Execution method during operation	Confirmation item
While pressing the BACKGROUND 2 and the FOREGROUND 1, press the LOCATION. NOTE: (1) The LEDs lighting speed can be changed by F4 control on the EFFECT CONTROL block. Normal speed is 100%. The speed ranges from 50% to 200%. (2) When a button of a block is pressed, lighting jumps to the top of respective block.	LEDs light in order from top to bottom, left to right. ① EDITOR ENABLE button (EDITOR ENABLE button lights.) ② SNAP SHOT block 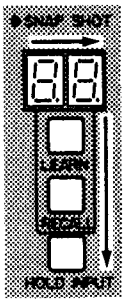 • Counter block test Left hand digit counts up from 0-9, then right hand digit counts up from 0-9. ③ LIGHTING block 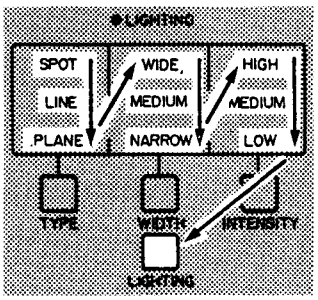 ④ TRIAL/SHADOW block 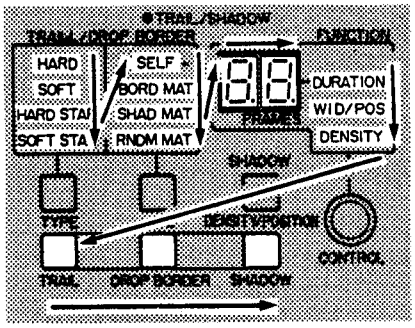 • Counter block test Left hand digit counts up from 0-9, then right hand digit counts up from 0-9. ⑤ EDGE block, USER PROGRAM block 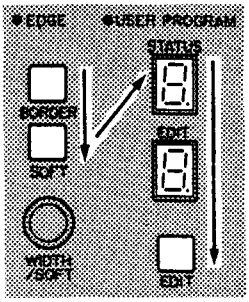 • Counter block test STATUS digit counts up from 0-9, then EDIT digit counts up from 0-9.

Execution method during operation	Confirmation item
	⑥ LOCATION block (LOCATION button lights.) ⑦ TITLE block, MATTES/BKGD block 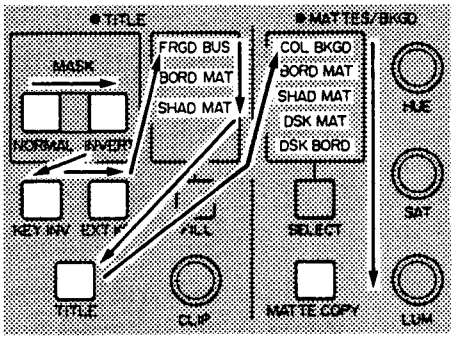 ⑧ DOWNSTREAM KEYER block 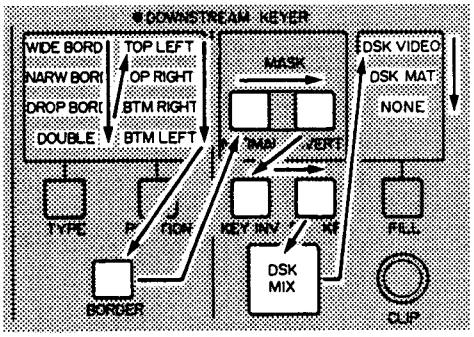 ⑨ EFFECT CONTROL block, SHIFT button, PATTERN NUMBER block 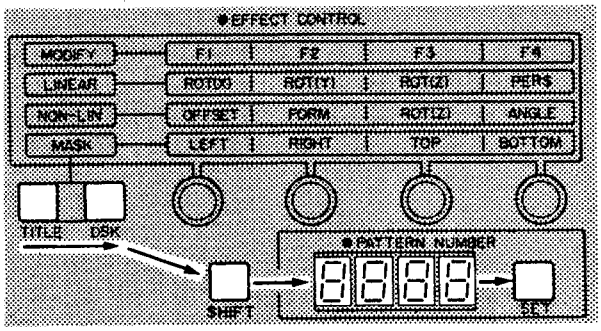 • Counter block test Left most digit of the four counters counts up from 0-9, then the next right hand digit counts up from 0-9 in this order.

Execution method during operation	Confirmation item
	⑩ Primary Crosspoint Bus block 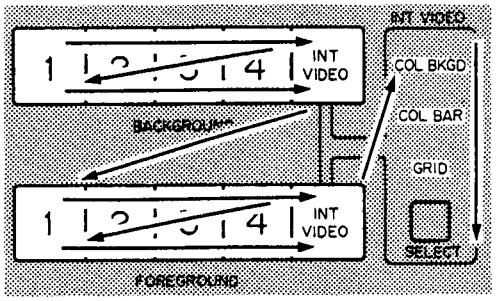 • BACKGROUND button test LEDs light from left to right first in red then in orange. • FOREGROUND button test LEDs light from left to right first in red then in orange. ⑪ EFFECT TRANSITION block 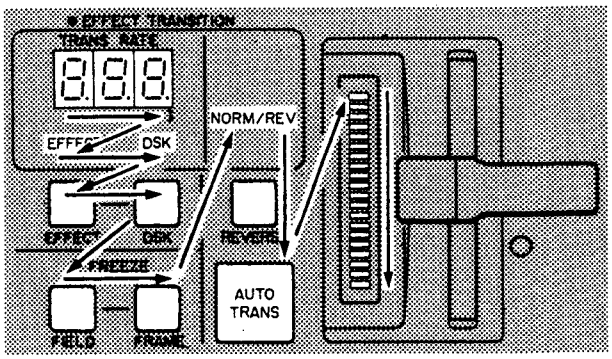 • Counter block test Left most digit of the three counters counts up from 0-9, then the next right hand digit counts up from 0-9 in this order. ⑫ PATTERN/KEY PAD block 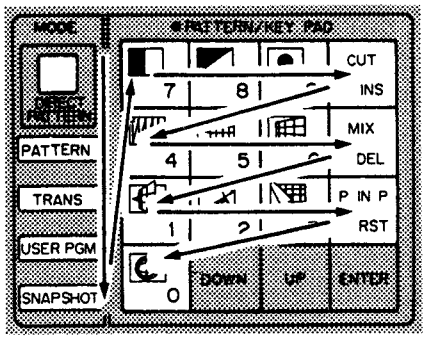 Confirm that the LEDs light in the order as shown above. (buttons 0-9, CUT INS, MIX DEL, P IN P RST and ENTER) • Press the ENTER on the KEY PAD button to restore normal operation.

2-3. CHECKING KNOBS, LEVERS AND BUTTONS ON CONTROL PANEL

nobs and corresponding buttons

Knob		Corresponding button	
EFFECT CONTROL block	F1	KEY PAD block	Button 7
	F2	KEY PAD block	Button 8
	F3	KEY PAD block	Button 9
	F4	KEY PAD block	CUT INS
LOCATION block	Z	LOCATION block	LOCATION
		FOREGROUND	INT VIDEO
EDGE block	WIDTH/ SOFT	EDGE block	Either EDGE block button
		FOREGROUND	Button 2
TITLE block	CLIP	TITLE block	Either TITLE block button
		BACKGROUND	Button 4
MATTES/BKGD block	HUE	BACKGROUND	Button 1
	SAT	BACKGROUND	Button 2
	LUM	BACKGROUND	Button 3
DOWNSTREAM KEYER	CLIP	DOWNSTREAM KEYER	Either DOWNSTREAM KEYER block button
TRAIL/SHADOW	CONTROL	TRAIL/SHADOW	Any TRAIL/SHADOWN block button
		FOREGROUND	Button 1

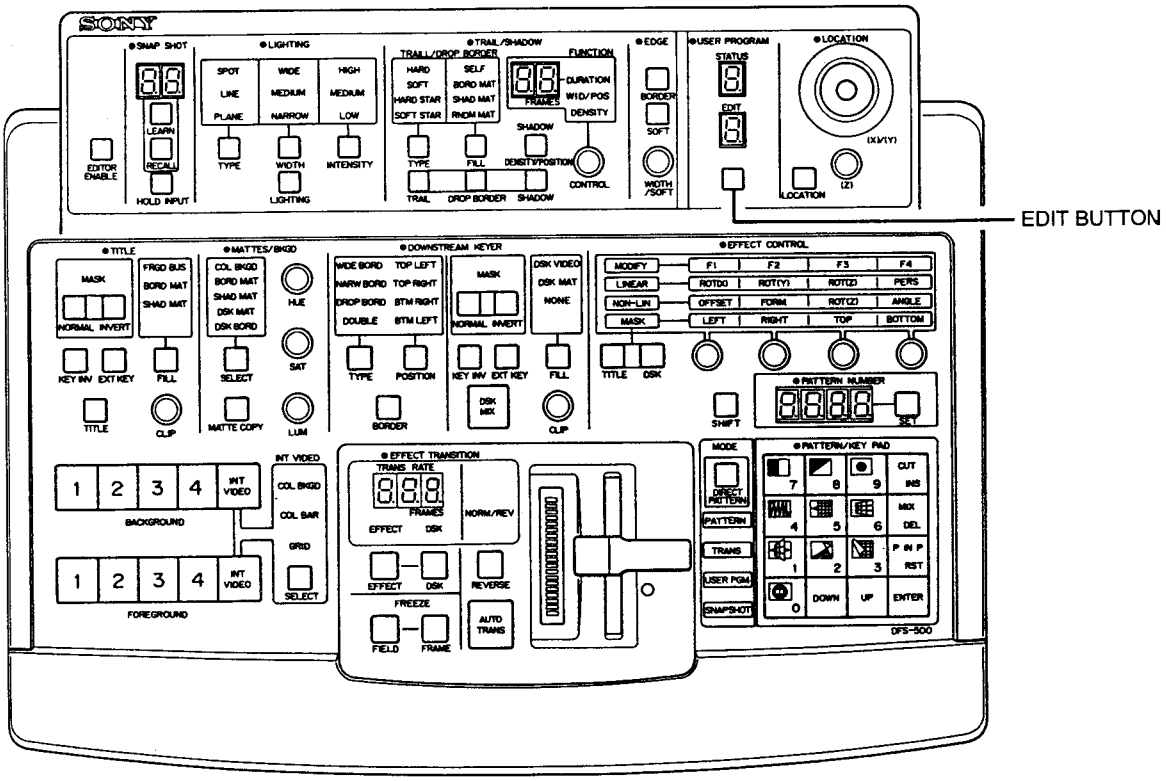

2-3-1. Checking Knobs, Levers and Buttons on Control Panel

Execution method during operation	Confirmation item
STEP-1 While pressing the BACKGROUND 2 and the FOREGROUND 2, press the LOCATION. (NOTE: At this time, warning tone sounds). Step 2, 3, 4 and 5 can be checked undividually.	
STEP-2 Knob Check Referring to the table showing knobs and corresponding buttons, turn the knob while pressing the corresponding button.	• Turn the knob and read the values shown in the PATTERN NUMBER window. 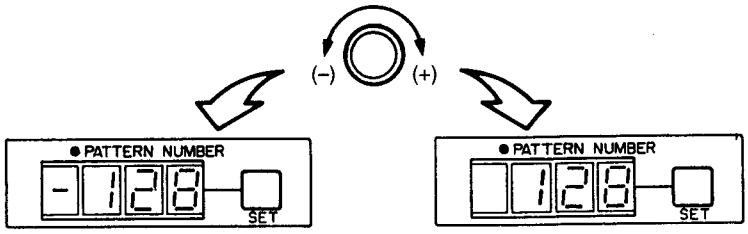 • The valucs range between –128 (when the knob is fully counterclockwise) and +128 (when the knob is fully clockwise). The values are only displayed while the corresponding button is being pressed. • Press the ENTER on KEY PAD button to restore normal operation.
STEP-3 FADER lever Check Move the FADER lever from an end to the other end. While pressing any button of EFFECT TRANSITION block, move the FADER lever.	• Move the FADER lever and read the values shown in the PATTERN NUMBER window. 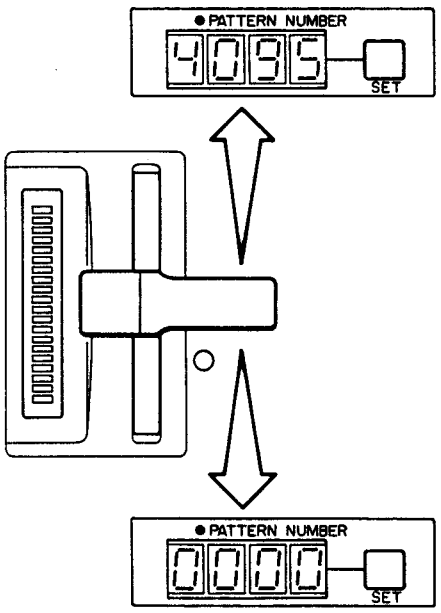 • Values range from 0 (the bottom most end) to 4095 (the top most end) • Press the ENTER on KEY PAD button to restore normal operation.

Execution method during operation	Confirmation item
STEP-4 LOCATION (X)/(Y) lever Check X (left/right) direction: Move the LOCATION (X)/&(Y) lever. Y (up/down) direction: While pressing EDIT of USER PROGRAM or FOREGROUND 4, move the LOCATION (X)/&(Y) lever.	• Move the LOCATION (X)/&(Y) lever and read the values shown in the PATTERN NUMBER window. 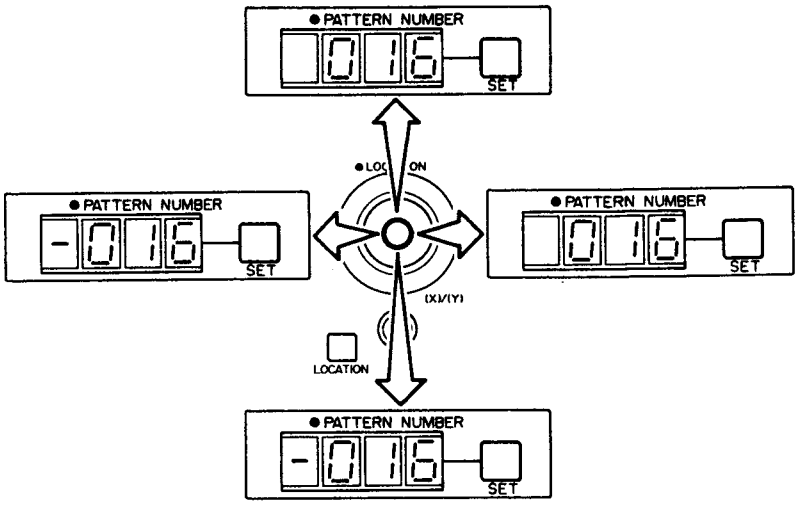 • Moving the lever up or to the right increases the absolute value, moving it down or to the left decreases this value. The range on each axis is 0 to 16. • X (left/right) direction is checked without pressing button. • Y (up/down) direction is checked while the assigned button is pressed. • Press the ENTER on KEY PAD button to restore normal operation.
STEP-5 Button Check Press all the buttons one by one.	• Check that the following MODE indicators on the PATTERN/KEY PAD block light all at the same time. • At this time, the buttons of self-illuminating type light their LEDs and the other buttons light their nearest LEDs. 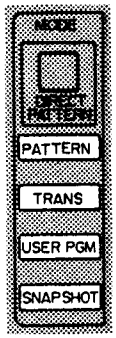 • In this check, if two or more buttons are pressed at the same time, a warning sounds. If the warning sounds when only one button is pressed, suspect a fault like a short-circuit. • Press the ENTER on KEY PAD button to restore normal operation. (NOTE: Check the ENTER on KEY PAD button last.)

SECTION 3
ELECTRICAL ALIGNMENT

3-1. ADJUSTMENT SEQUENCE

A-63 Board Adjustment (FOR UC)

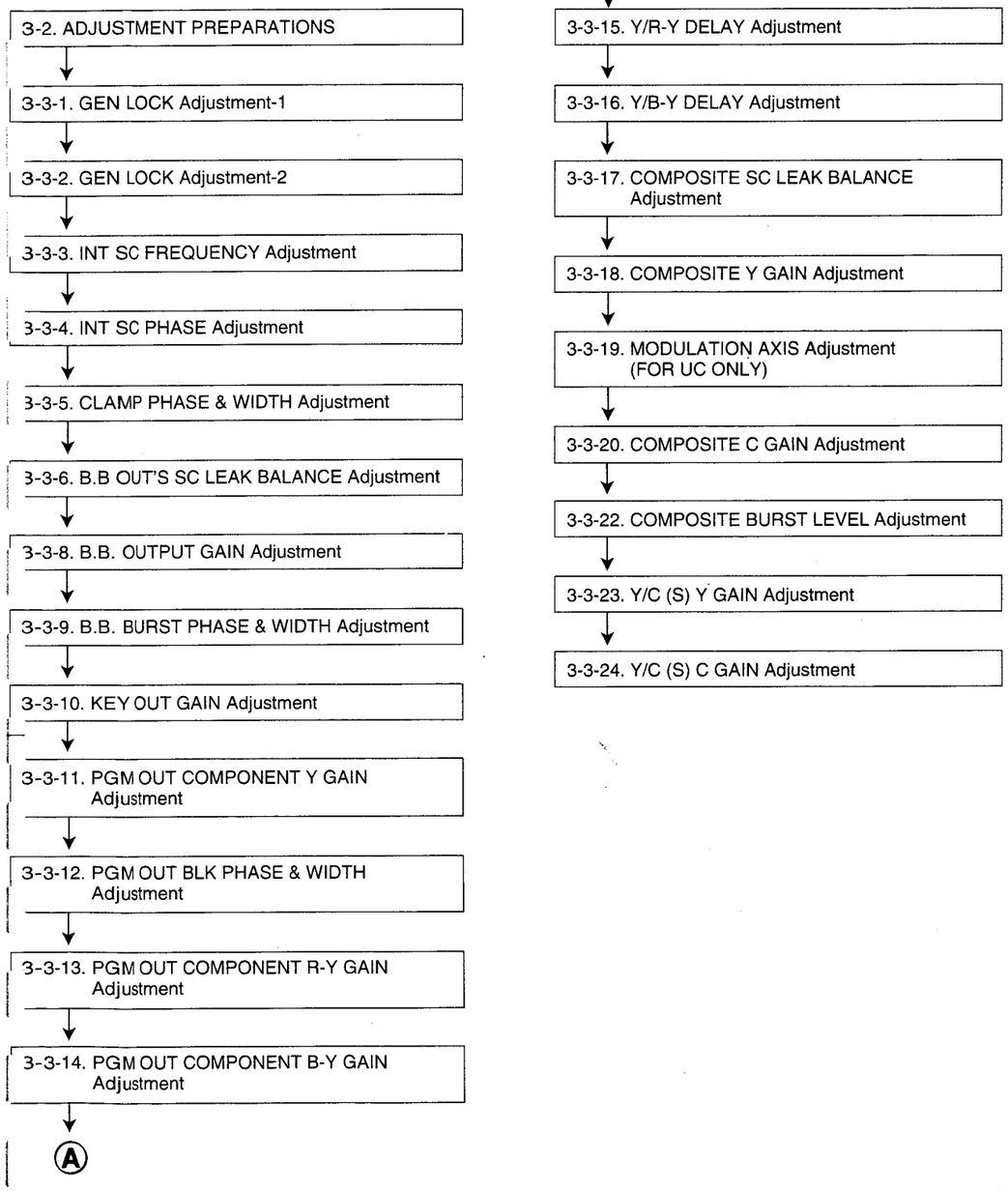

DA-63 Board Adjustment (FOR EK)

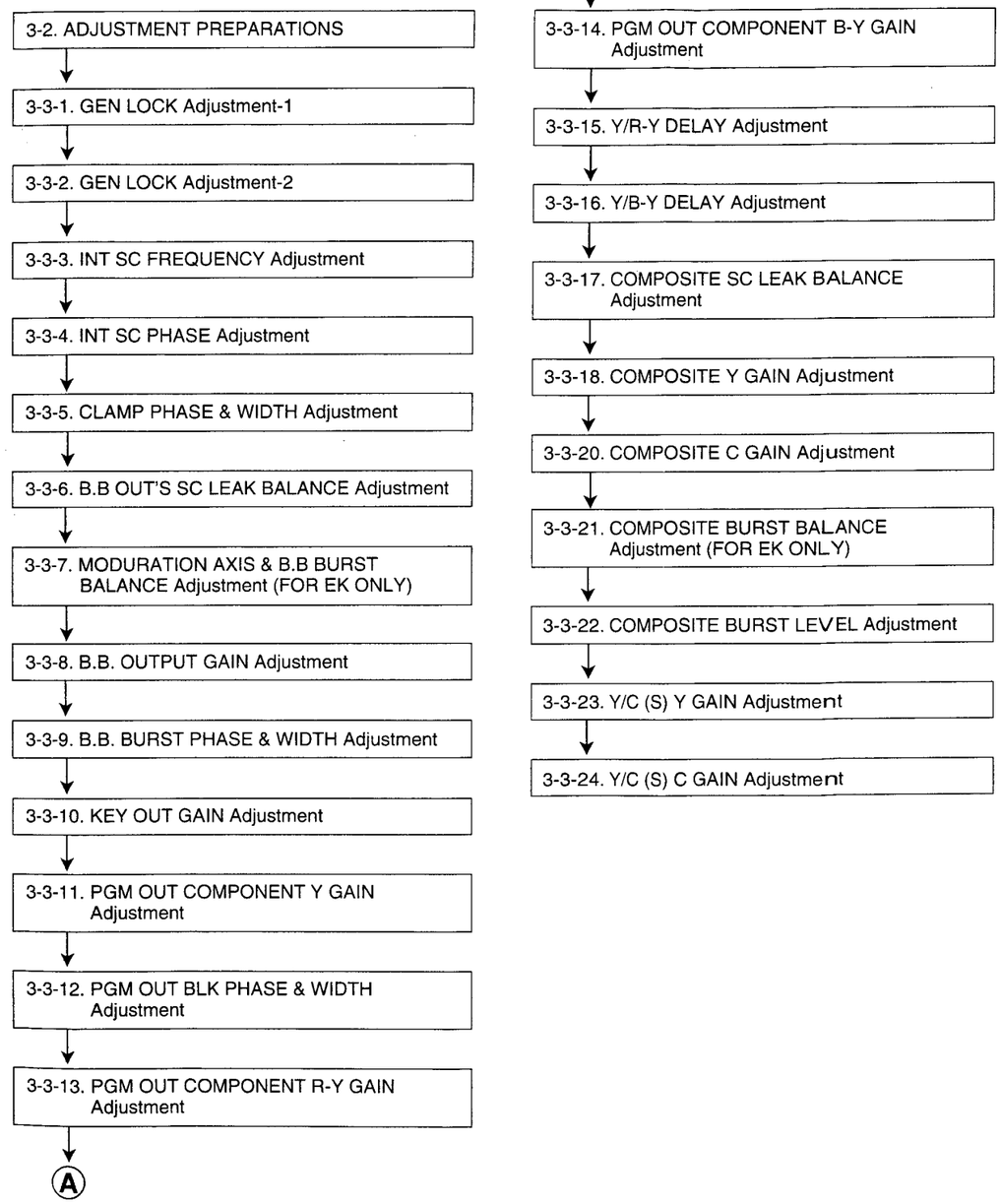

AD-76 Board Adjustment

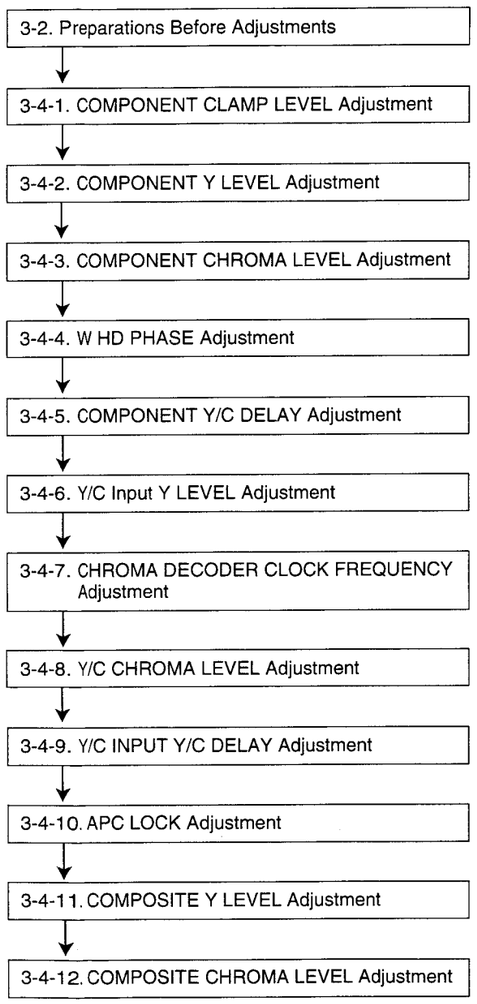

3-2. ADJUSTMENT PREPARATIONS

3-2-1. Tools/Measuring Equipments

1. Composite Signal Generator
   Equivalent: 1410(NTSC)/Tektronix
   1411(PAL)/Tektronix

2. Component Signal Generator
   Equivalent: TSG300/Tektronix

3. Y/C Signal Generator
   Equivalent: TSG130(NTSC)/Tektronix
   TSG131(PAL)/Tektronix

4. Oscilloscope
   Equivalent: 2445/Tektronix

5. Waveform Monitor and Vectorscope
   Equivalent: 1780(NTSC)/Tektronix
   1781(PAL)/Tektronix

6. Video Monitor
   Equivalent: PVM1444Q/Sony

7. Frequency Counter
   Equivalent: 5315/Hewlett Packard

8. Digital Voltmeter
   Equivalent: 3435A/Hewlett Packard

9. Video Cable (S-BNC)
   Sony Parts No.: J-6381-380-A

10. Multi-connector Cable (DIBNC)
    Sony Part No.: J-6031-820-A

11. Multi-connector Cable (DOBNC)
    Sony Part No.: J-6031-830-A

12. Extension Board (EX-326)
    Sony Part No.: J-6186-940-A

Switch Settings

- SY-172 board
  Editing equipment selection switch
  S1 ..... BVE-900
  Set Up ON/OFF switch
  S3-2 ..... For UC: ON / For EK:OFF

- DA-63 board
  S1: OFF
  S2: 0°
  S3: 3
  S101: 5
  S102: R/G/B
  S103: 6

Volume Settings

- DA-63 board
  RV11 : Mechanical center
  RV515: Mechanical center
  RV526: Middle of left fully and Mechanical center

3-2-2. Connection

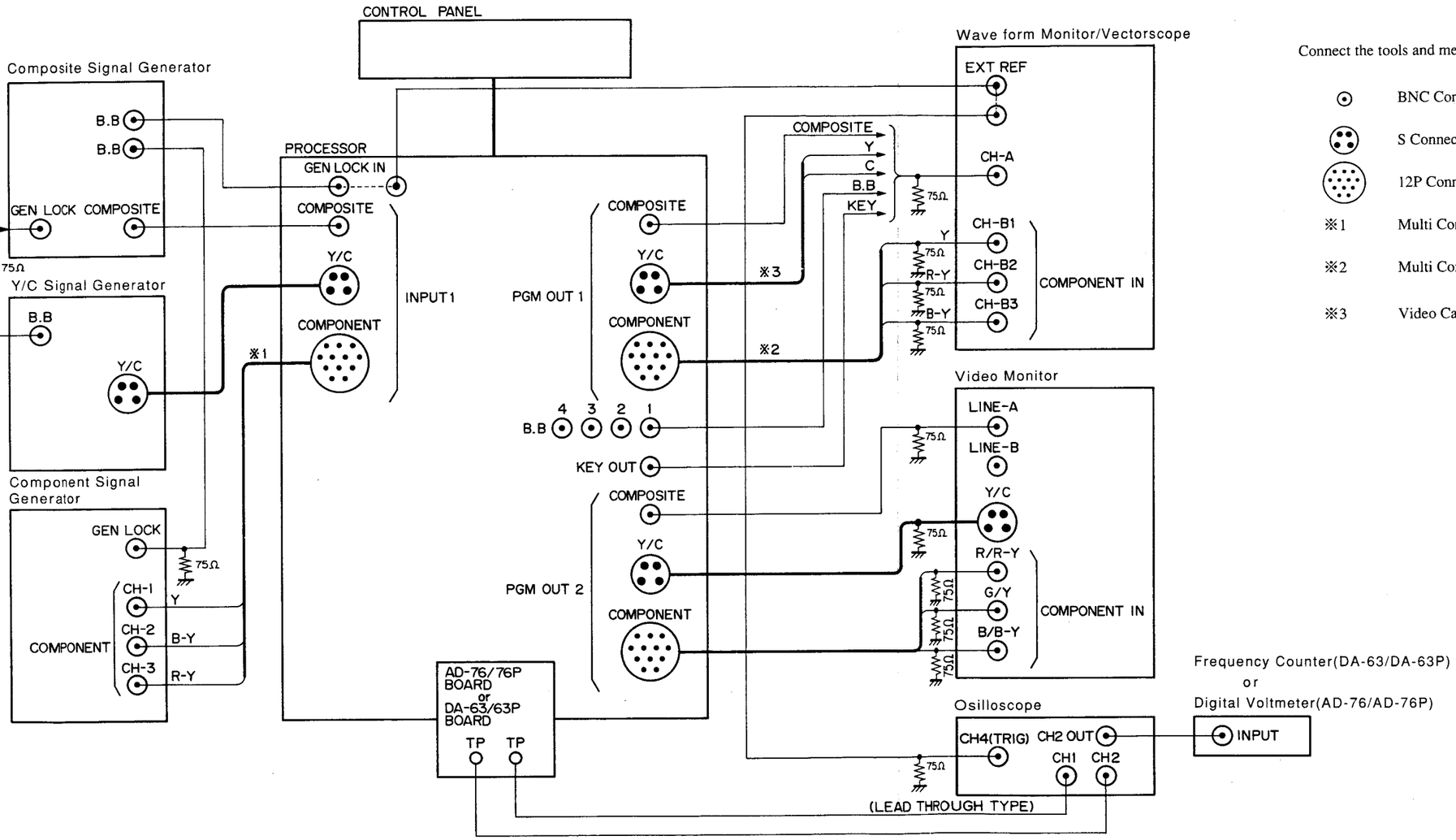

Connect the tools and measuring equipments as shown above.

⊙	BNC Connector
	S Connector
	12P Connector
※1	Multi Connector Cable (DIBNC)
※2	Multi Connector Cable (DOBNC)
※3	Video Cable (S-BNC)

3-3

3-2-3. Built-in Color Bars

Selecting the built-in color bars
- The buttons, knobs and displays used in this manual are shown in the figure below.

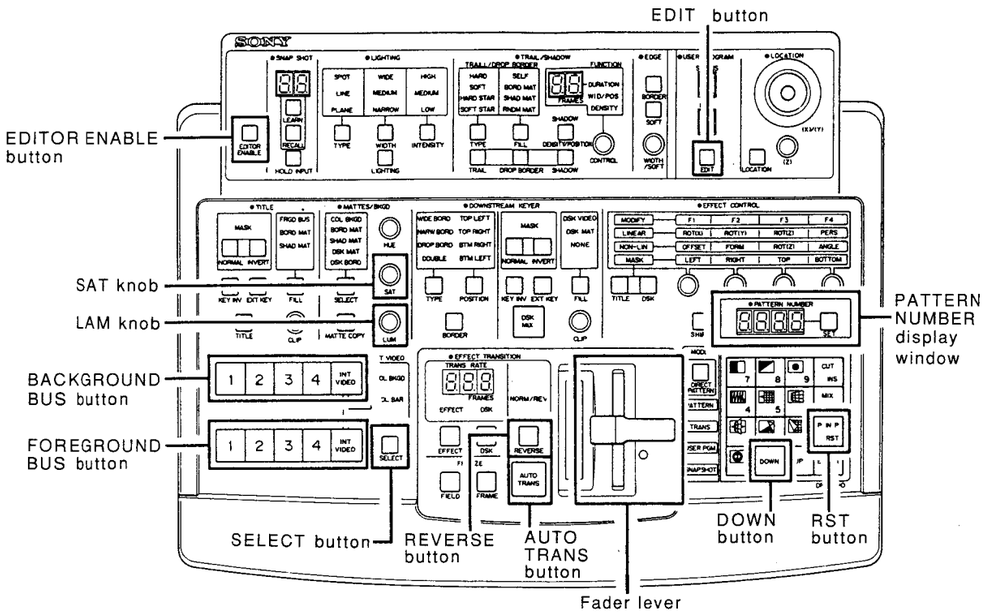

Selecting the built-in color bars

STEP-1
Initialize the control panel setting
1. If the EDIT button of the USER PROGRAM section is lit, press it to turn it off.
2. While pressing the RST and DOWN buttons of the KEY PAD section, press the EDITOR ENABLE button.
   The buzzer will sound, and each setting will be initialized-returning them to factory settings.

STEP-2
Output the built-in color bars to PGM OUT
- Select the COL BAR
  1. Select the INT VIDEO button with both the BACKGROUND bus and FOREGROUND bus.
  2. Push the FADER LEVER to the top or bottom. The INT VIDEO button of BACKGROUND bus will light up red and that of the FOREGROUND bus will light up orange.
  3. Press the INT VIDEO SELECT button and select COL BAR.

- Select COL BKGD (100% WHITE)
  1. Select the INT VIDEO button with both the BACKGROUND bus and FOREGROUND bus.
  2. Push the FADER LEVER to the top or bottom. The INT VIDEO button of BACKGROUND bus will light up red and that of the FOREGROUND bus will light up orange.
  3. Press the INT VIDEO SELECT button and select COL BKGD.
  4. Rotate the SAT knob of the MATTES/BKGD section to the left until the buzzer sounds.
     Do the same for the LUM knob.

Built-in Color Bars (FOR UC)

COMPOSITE

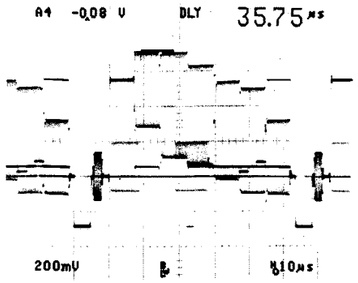

COMPONENT Y

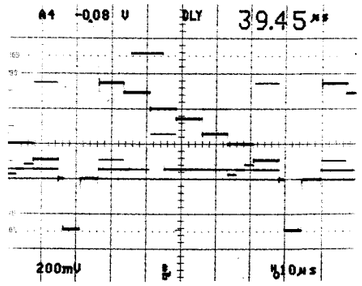

Y/C Y

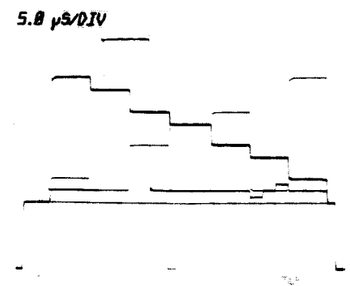

COMPONENT R-Y

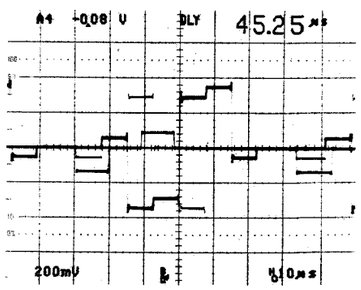

Y/C C

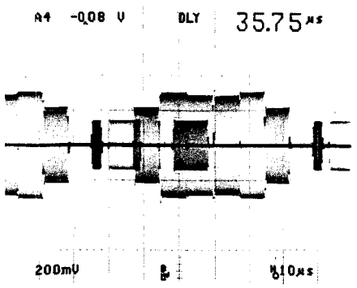

COMPONENT B-Y

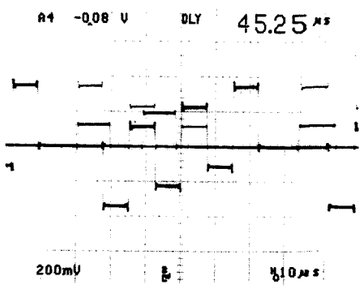

Built-in Color Bars (FOR EK)

OMPOSITE

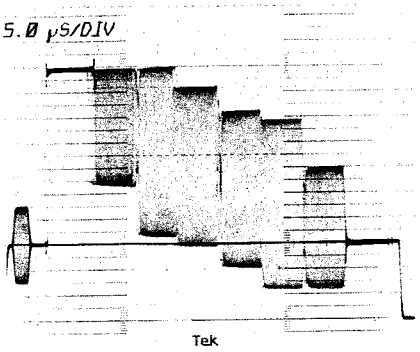

COMPONENT Y

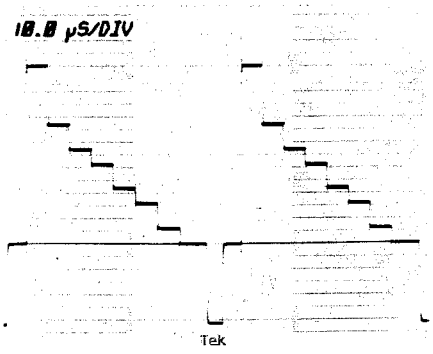

Y/C Y

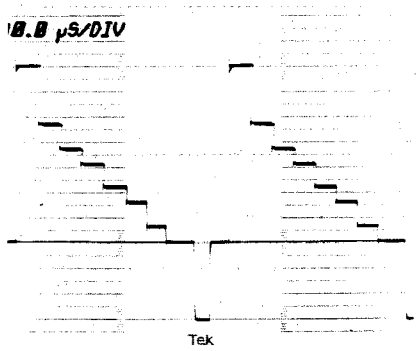

COMPONENT R-Y

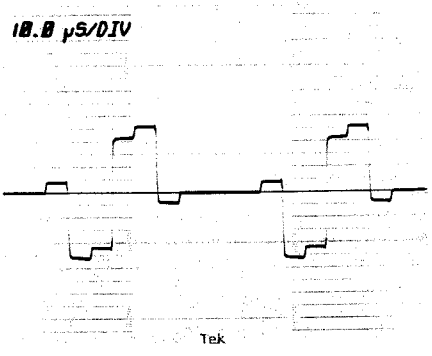

/C C

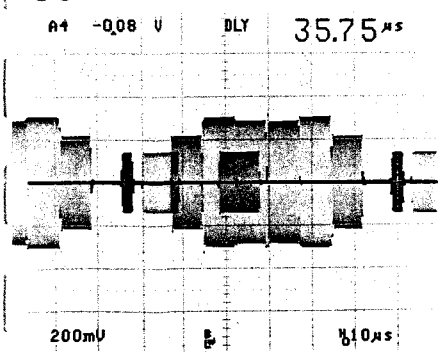

COMPONENT B-Y

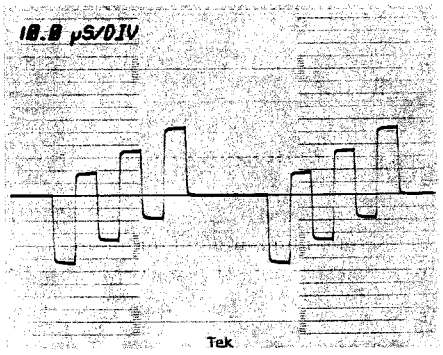

3-2-4. Layout of Adjustment Controls

DA-63/DA-63P Board (A Side)

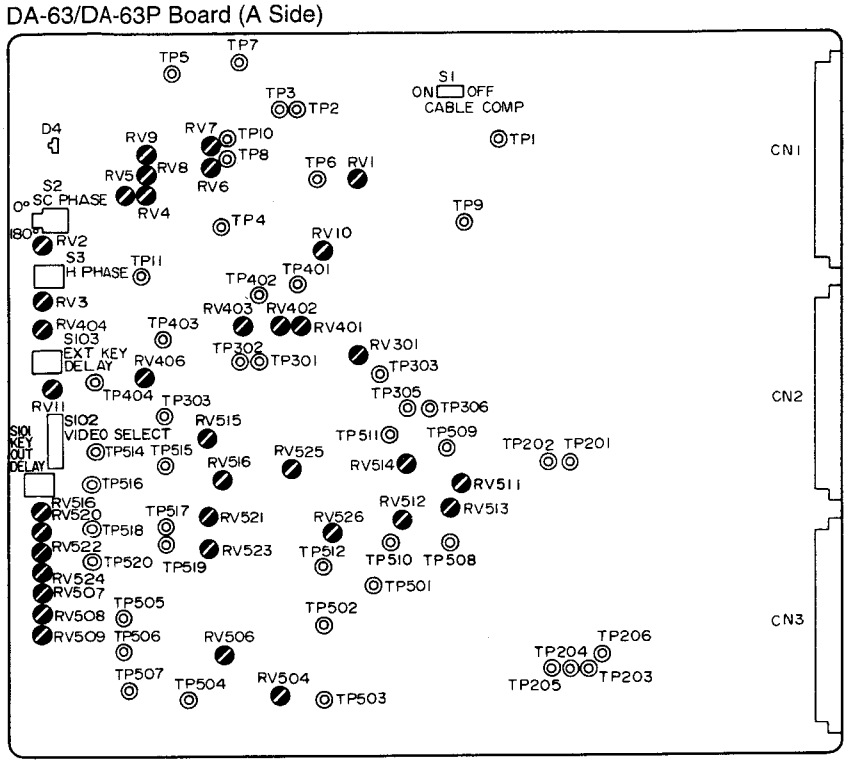

AD-76/AD-76P Board (A Side)

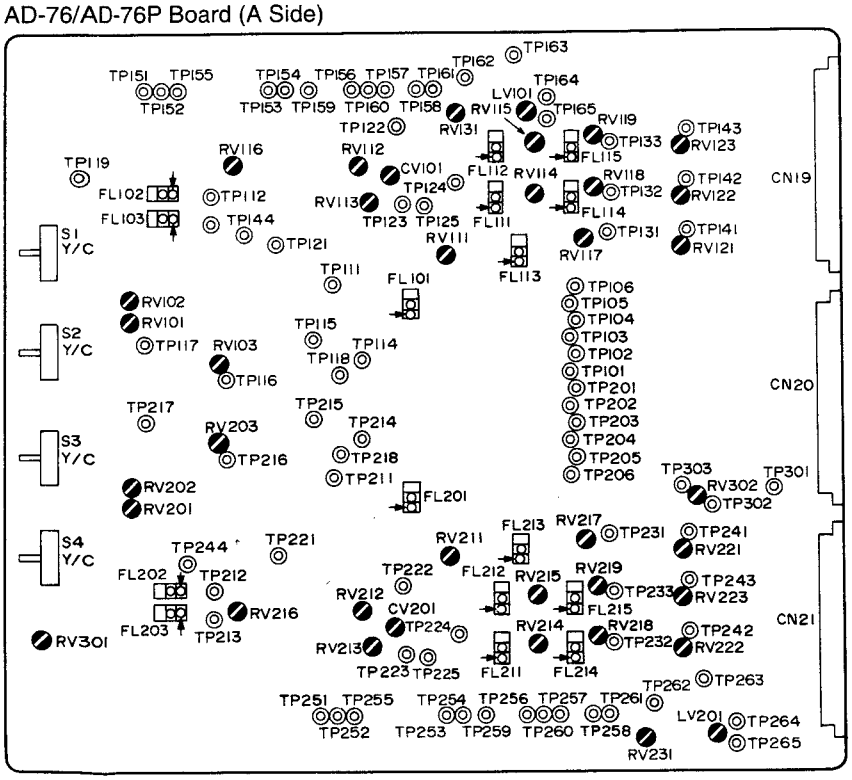

3-3. DA-63 BOARD ADJUSTMENT

3-3-1. GEN LOCK Adjustment-1

Machine conditions for adjustment	Specifications	Adjusting Point
STEP-1 • Connection: Section 3-2-2 Connection • Extension board: Extend the DA-63 board with the EX-326 board. • Switch setting: S3-2/SY-172 (L10) = ON (For UC) S3-2/SY-172 (L10) = OFF (For EK)		
STEP-2 • Oscilloscope CH-1: 200 mV/DIV 2 µS/DIV CH-2: 200 mV/DIV 2 µS/DIV TRIG: B.B (CH-4)	• Check that D4 lights up. CH-1: B.B OUT-1 CH-2: GEN LOCK IN NG 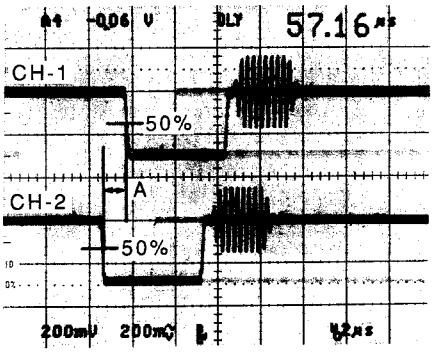 OK 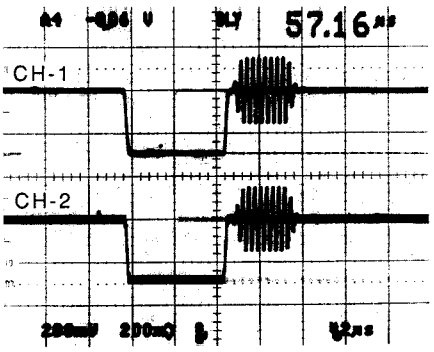 A = 0 ± 50 nS • Adjust ⊘RV3 and S3 so that the specification above is satisfied.	H PHASE FINE adjustment ⊘RV3/DA-63 (E14) H PHASE COARSE S3/DA-63 (D14)

3-3-2. GEN LOCK Adjustment-2

FOR UC

Machine conditions for adjustment	Specifications	Adjusting Point
STEP-1 • Connection: Section 3-2-2 Connection • Extension board: Extend the DA-63 board with the EX-326 board. • Switch setting: S3-2/SY-172 (L10) = ON		
STEP-2 • Vectorscope 75%, SET UP L.DISP : SCH INPUT : CH-A FILTER: FLAT GAIN : VAR REF : EXT	PGM OUT 1 (COMPOSITE) NG 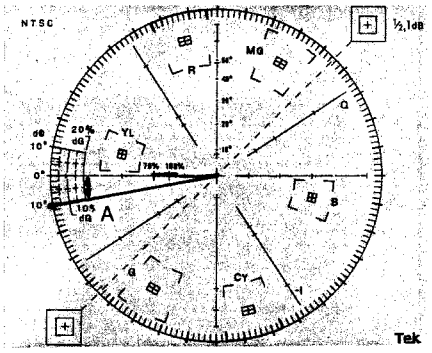 OK 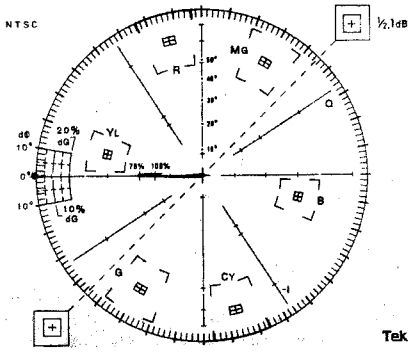 A = 0 ± 0.5° • Adjust ⊘RV2 and S2 so that the specification above is satisfied.	SC PHASE FINE adjustment ⊘RV2/DA-63 (D14) SC PHASE COARSE S2/DA-63 (C14)

3-3-2. GEN LOCK Adjustment-2)

FOR EK

Machine conditions for adjustment	Specifications	Adjusting Point
STEP-1 • Connection: Section 3-2-2 Connection • Extension board: Extend the DA-63 board with the EX-326 board. • Switch setting: S3-2/SY-172 (L10) = OFF		
STEP-2 • Vectorscope 75% L.DISP : SCH INPUT : CH-A FILTER: FLAT GAIN : VAR REF : EXT	PGM OUT 1 (COMPOSITE) NG 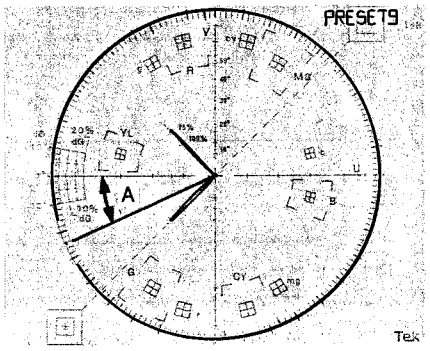 OK 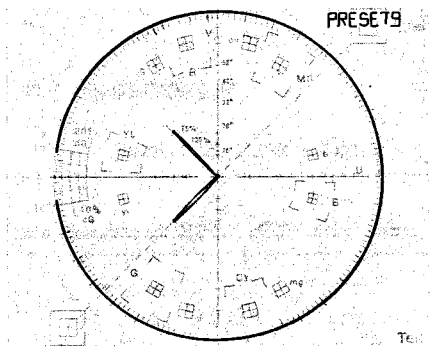 A = 0 ± 0.5° • Adjust ⊘RV2 and S2 so that the specification above is satisfied.	SC PHASE FINE adjustment ⊘RV2/DA-63 (D14) SC PHASE COARSE S2/DA-63 (C14)

3-3-3. INT SC FREQUENCY Adjustment

FOR UC

Machine conditions for adjustment	Specifications	Adjusting Point
STEP-1 • Connection: Section 3-2-2 Connection • Extension board: Extend the DA-63 board with the EX-326 board. • Switch setting: S3-2/SY-172 (L10) = ON • Disconnect the GEN LOCK IN connector of the rear panel.		
STEP-2 • Oscilloscope CH-2: 200 mV/DIV(AC) 100 nS/DIV TRIG: CH2	CH-2: TP9/DA-63 (C7) 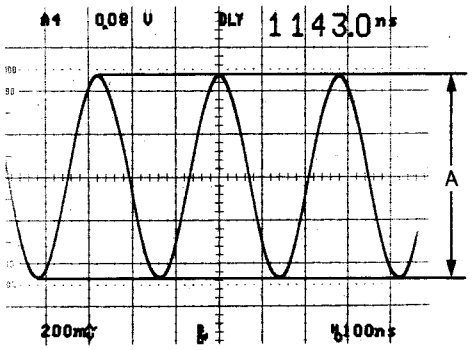 A = 1.0 ± 0.2 V p-p • Check that the specification above is satisfied.	(Check)
STEP-3 • Adjust the oscilloscope as follows. CH2: 200 mV/DIV (AC). • Connect Frequency counter to CH-2 OUT of oscilloscope.	3.579545 MHz ± 5 Hz • Check that D4 (B14) is off.	SC FREQUENCY adjustment ⊘RV1/DA-63 (B8)
STEP-4 • After this adjustment is completed, connect the GEN LOCK IN connector of the rear panel again.		

(3-3-3. INT SC FREQUENCY Adjustment)

FOR EK

Machine conditions for adjustment	Specifications	Adjusting Point
STEP-1 • Connection: Section 3-2-2 Connection • Extension board: Extend the DA-63 board with the EX-326 board. • Switch setting: S3-2/SY-172 (L10) = OFF • Disconnect the GEN LOCK IN connector of the rear panel.		
STEP-2 • Oscilloscope CH-2: 200 mV/DIV(AC) 100 nS/DIV TRIG: CH2	CH-2: TP9/DA-63 (C7) 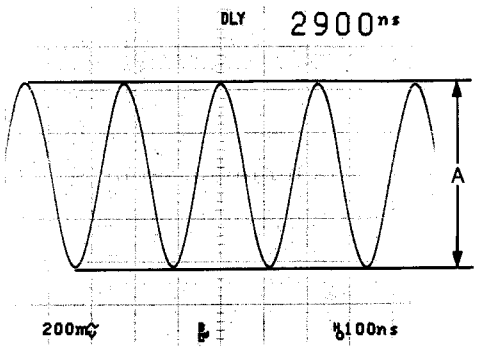 A = 1.0 ± 0.2 V p-p • Check that the specification above is satisfied.	(Check)
STEP-3 • Adjust the oscilloscope as follows. CH2: 200 mV/DIV (AC). • Connect Frequency counter to CH-2 OUT of oscilloscope.	4.433619 MHz ± 5 Hz • Check that D4 (B14) is off.	SC FREQUENCY adjustment ◐RV1/DA-63 (B8)
STEP-4 • After this adjusting is completed, connect the GEN LOCK IN connector of the rear panel again.		

3-3-4. INT SC PHASE Adjustment

FOR UC

<table>
<tr><th>Machine conditions for adjustment</th><th>Specifications</th><th>Adjusting Point</th></tr>
<tr><td colspan="3">STEP-1
• Connection: Section 3-2-2 Connection
• Extension board: Extend the DA-63 board with the EX-326 board.
• Switch setting: S3-2/SY-172 (L10) = ON
• Disconnect the GEN LOCK IN connector of the rear panel.</td></tr>
<tr><td>STEP-2

• Vectorscope
75%, SET UP
L.DISP : SCH
INPUT : CH-A
FILTER: FLAT
GAIN : VAR
REF : INT</td><td>PGM OUT 1 (COMPOSITE)

NG
 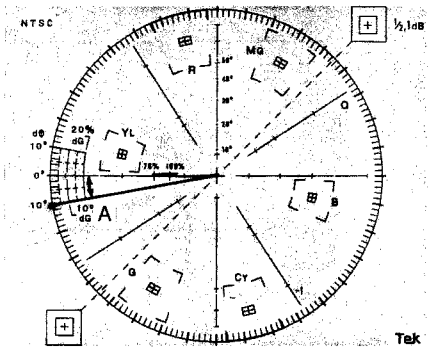

OK
 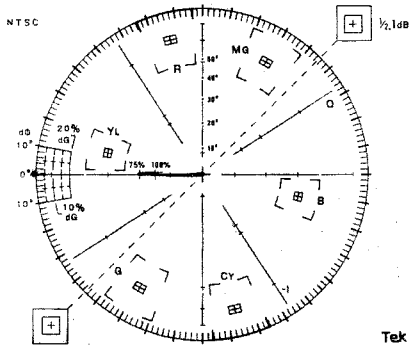

A = 0 ± 0.5°

• Adjust ◐RV10 so that the specification above is satisfied.</td><td>INT SC PHASE adjustment
◐RV10/DA-63 (D9)</td></tr>
<tr><td colspan="3">STEP-3
• After this adjustment is completed, connect the GEN LOCK IN connector of the rear panel again.</td></tr>
</table>

3-3-4. INT SC PHASE Adjustment)

FOR EK

Machine conditions for adjustment	Specifications	Adjusting Point
STEP-1 • Connection: Section 3-2-2 Connection • Extension board: Extend the DA-63 board with the EX-326 board. • Switch setting: S3-2/SY-172 (L10) = OFF • Disconnect the GEN LOCK IN connector of the rear panel.		
STEP-2 • Vectorscope 75% L.DISP : SCH INPUT : CH-A FILTER: FLAT GAIN : VAR REF : INT	PGM OUT 1 (COMPOSITE) NG 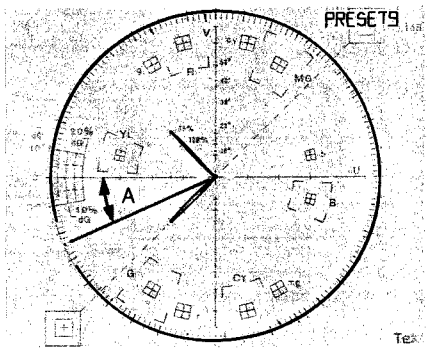 OK 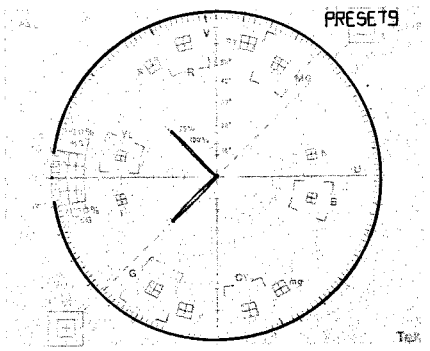 A = 0 ± 0.5° • Adjust ⊘RV10 so that the specification above is satisfied.	INT SC PHASE adjustment ⊘RV10/DA-63 (D9)
STEP-3 • After this adjustment is completed, connect the GEN LOCK IN connector of the rear panel again.		

3-3-5. CLAMP PHASE & WIDTH Adjustment

FOR UC

<table>
<tr><th>Machine conditions for adjustment</th><th>Specifications</th><th>Adjusting Point</th></tr>
<tr><td colspan="3">STEP-1
• Connection: Section 3-2-2 Connection
• Extension board: Extend the DA-63 board with the EX-326 board.
• Switch setting: S3-2/SY-172 (L10) = ON</td></tr>
<tr><td>STEP-2

• Oscilloscope
CH-1: 200 mV/DIV
1 µS/DIV
CH-2: 2V/DIV
1 µS/DIV
TRIG: B.B (CH4)</td><td>CH-1: TP305/DA-63 (F8)
CH-2: TP11/DA-63 (D12)
 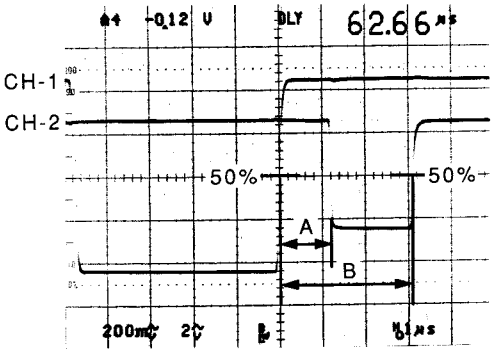

A = 1.2 ± 0.1 µS
B = 3.1 ± 0.1 µS</td><td>A: CLAMP PULSE PHASE adjustment
● RV4/DA-63 (C12)

B: CLAMP PULSE WIDTH adjustment
● RV5/DA-63 (C12)</td></tr>
</table>

(3-3-5. CLAMP PHASE & WIDTH Adjustment)

FOR EK

Machine conditions for adjustment	Specifications	Adjusting Point
STEP-1 • Connection: Section 3-2-2 Connection • Extension board: Extend the DA-63 board with the EX-326 board. • Switch setting: S3-2/SY-172 (L10) = OFF		
STEP-2 • Oscilloscope CH-1: 200 mV/DIV 1 µS/DIV CH-2: 200 mV/DIV 1 µS/DIV TRIG: B.B (CH-4)	CH-1: TP305/DA-63 (F8) CH-2: TP11/DA-63 (D12) 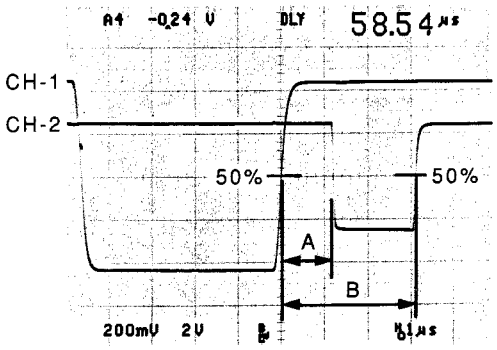 A = 1.2 ± 0.1 µS B = 3.1 ± 0.1 µS	A: CLAMP PULSE PHASE adjustment ◐RV4/DA-63 (C12) B: CLAMP PULSE WIDTH adjustment ◐RV5/DA-63 (C12)

3-3-6. B.B OUT'S SC LEAK BALANCE Adjustment

FOR UC

Machine conditions for adjustment	Specifications	Adjusting Point
STEP-1 • Connection: Section 3-2-2 Connection • Extension board: Extend the DA-63 board with the EX-326 board. • Switch setting: S3-2/SY-172 (L10) = ON		
STEP-2 • (1) or (2) is used. (1) Waveform Monitor INPUT: CH-A MODE: WFM REF : EXT (2) Oscilloscope CH-1: 100 mV/DIV 2 µS/DIV TRIG: B.B (CH-4)	B.B OUT-1 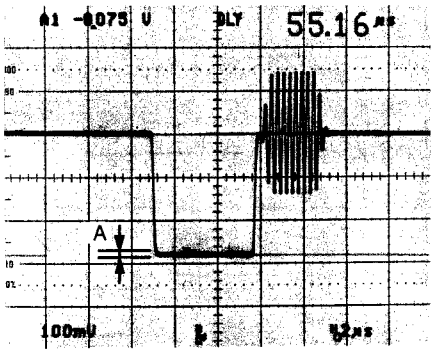 A = Below 20 mV p-p (Adjust to minimum.)	SC LEAK BAL adjustment ●RV402/DA-63 (E10)

FOR EK

Machine conditions for adjustment	Specifications	Adjusting Point
STEP-1 • Connection:Section 3-2-2 Connection • Extension board:Extend the DA-63 board with the EX-326 board. • Switch setting:S3-2/SY-172 (L10) = OFF		
STEP-2 • (1) or (2) is used. (1) Waveform Monitor INPUT: CH-A MODE: WFM REF : EXT (2) Oscilloscope CH-1: 100 mV/DIV 2 µS/DIV TRIG: B.B (CH-4)	B.B OUT-1 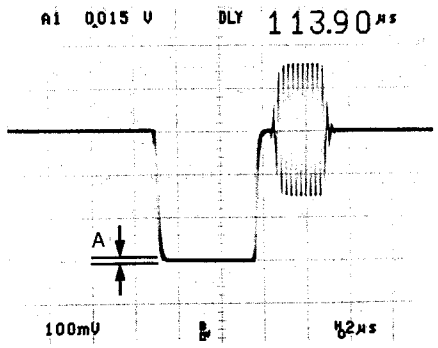 A = Below 20 mV p-p (Adjust to minimum.)	SC LEAK BAL adjustment ●RV402/DA-63 (E10)

3-3-7. MODURATION AXIS & B.B BURST BALANCE Adjustment (FOR EK ONLY)

Machine conditions for adjustment	Specifications	Adjusting Point
STEP-1 • Connection: Section 3-2-2 Connection • Extension board: Extend the DA-63 board with the EX-326 board. • Switch setting: S3-2/SY-172 (L10) = OFF		
STEP-2 • Vectorscope 75% L.DISP : VECT INPUT : CH-A FILTER: FLAT GAIN : VAR REF : EXT	B.B OUT-1 • Set on the circumstance NG 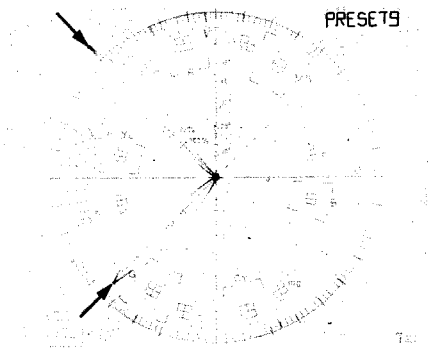 OK 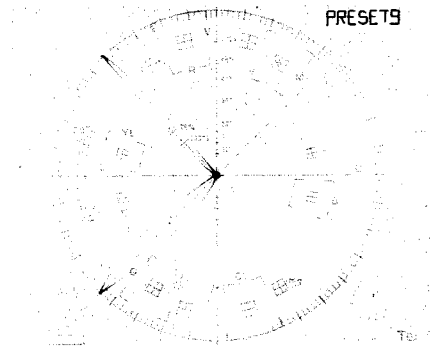 • Adjust GAIN VR of the vector scope and ⊘ RV301so that the both spots of the BURST are on the circumference.	MODURATION AXIS adjustment ⊘RV301/DA-63 (E8)

(3-3-7. MODURATION AXIS & B.B BURST BALANCE Adjustment (FOR EK ONLY))

Machine conditions for adjustment	Specifications	Adjusting Point
STEP-3 • Vectorscope 75% L.DISP : VECT INPUT : CH-A FILTER: FLAT GAIN : VAR REF : EXT	B.B OUT-1 NG 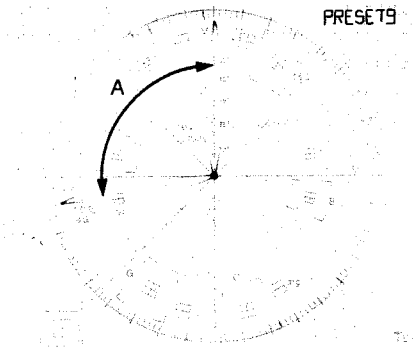 OK 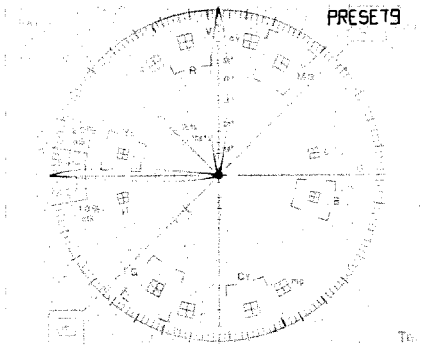 A = 90 ± 0.5° • Adjust ◐RV401 so that the specification above is satisfied.	BURST BALANCE adjustment ◐RV401/DA-63 (E9)

3-3-8. B.B OUTPUT GAIN Adjustment

FOR UC

Machine conditions for adjustment	Specifications	Adjusting Point
STEP-1 • Connection: Section 3-2-2 Connection • Extension board: Extend the DA-63 board with the EX-326 board. • Switch setting: S3-2/SY-172 (L10) = ON		
STEP-2 • (1) or (2) is used. (1) Waveform Monitor INPUT: CH-A MODE: WFM REF : EXT (2) Oscilloscope CH-1: 100 mV/DIV 2 µS/DIV TRIG: B.B (CH-4)	B.B OUT-1 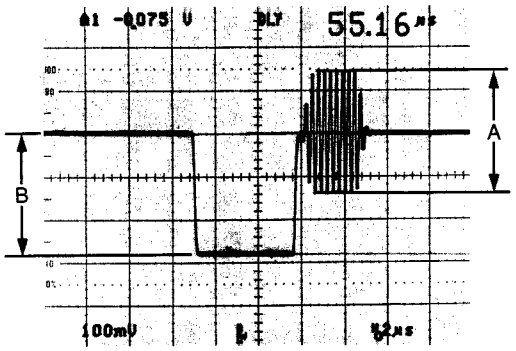 A = 286 ± 4 mV p-p B = 286 ± 4 mV p-p	A: B.B OUT GAIN adjustment ◐RV404/DA-63 (E14) B: SYNC LEVEL (B.B) adjustment ◐RV406/DA-63 (F12)

FOR EK

Machine conditions for adjustment	Specifications	Adjusting Point
STEP-1 • Connection: Section 3-2-2 Connection • Extension board: Extend the DA-63 board with the EX-326 board. • Switch setting: S3-2/SY-172 (L10) = OFF		
STEP-2 • (1) or (2) is used. (1) Waveform Monitor INPUT: CH-A MODE: WFM REF : EXT (2) Oscilloscope CH-1: 100 mV/DIV 2 µS/DIV TRIG: B.B (CH-4)	B.B OUT-1 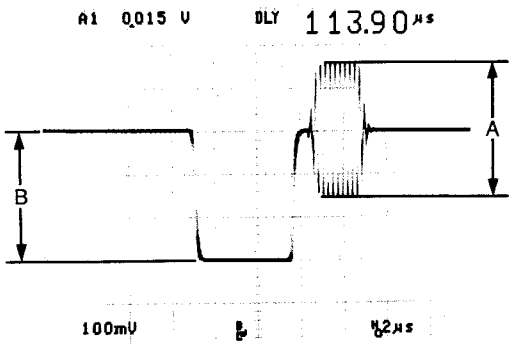 A = 300 ± 4 mV p-p B = 300 ± 4 mV p-p	A: B.B OUT GAIN adjustment ◐RV404/DA-63 (E14) B: SYNC LEVEL (B.B) adjustment ◐RV406/DA-63 (F12)

3-3-9. B.B BURST PHASE & WIDTH Adjustment

FOR UC

Machine conditions for adjustment	Specifications	Adjusting Point
STEP-1 • Connection: Section 3-2-2 Connection • Extension board: Extend the DA-63 board with the EX-326 board. • Switch setting: S3-2/SY-172 (L10) = ON		
STEP-2 • (1) or (2) is used. (1) Waveform Monitor INPUT: CH-A MODE: WFM REF : EXT (2) Oscilloscope CH-1: 100 mV/DIV 2 µS/DIV TRIG: B.B (CH4)	B.B OUT-1 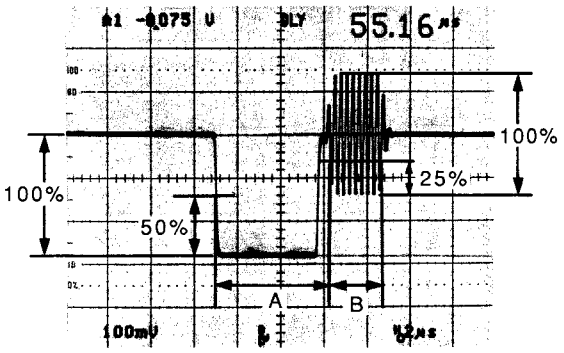 A = 5.3 ± 0.1 µS B = 2.5 ± 0.1 µS • Adjust ⊘RV8 and ⊘RV9 so that the specifications above are satisfied. • The 50% and 25% indicate the 50% of the SYNC level and the 25% of the BURST level.	A: BURST PHASE adjustment ⊘ RV9/DA-63 (B12) B: BURST WIDTH adjustment ⊘ RV8/DA-63 (B12)

(3-3-9. B.B BURST PHASE & WIDTH Adjustment)

FOR EK

Machine conditions for adjustment	Specifications	Adjusting Point
STEP-1 • Connection: Section 3-2-2 Connection • Extension board: Extend the DA-63 board with the EX-326 board. • Switch setting: S3-2/SY-172 (L10) = OFF		
STEP-2 • (1) or (2) is used. (1) Waveform Monitor INPUT: CH-A MODE: WFM REF : EXT (2) Oscilloscope CH-1: 100 mV/DIV 2 µS/DIV TRIG: B.B (CH4)	B.B OUT-1 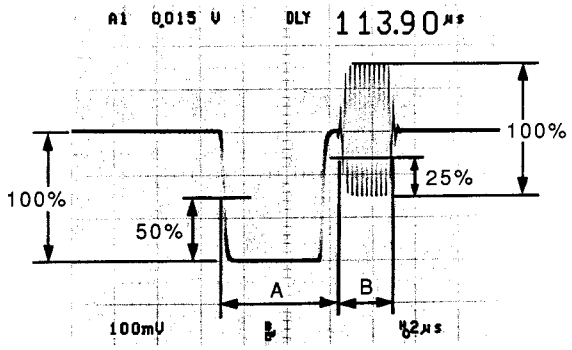 A = 5.60 ± 0.1 µS B = 2.25 ± 0.1 µS • Adjust ⊘RV8 and ⊘RV9 so that the specifications above are satisfied. • The 50% and 25% indicate the 50% of the SYNC level and the 25% of the BURST level.	A: BURST PHASE adjustment ⊘ RV9/DA-63 (B12) B: BURST WIDTH adjustment ⊘ RV8/DA-63 (B12)

3-3-10. KEY OUT GAIN Adjustment

Machine conditions for adjustment	Specifications	Adjusting Point
STEP-1 • Connection: Section 3-2-2 Connection • Extension board: Extend the DA-63 board with the EX-326 board. • Switch setting: S3-2/SY-172 (L10) = ON(For UC) S3-2/SY-172 (L10) = OFF(For EK) • Control panel setting: 1. Select the PATTERN NUMBER = 1100. 2. Push the AUTO TRANS button.		
STEP-2 • (1) or (2) is used. (1) Waveform Monitor INPUT: CH-A MODE: WFM REF : EXT (2) Oscilloscope CH-1: 200 mV/DIV 10 µS/DIV TRIG: B.B (CH4)	KEY OUT 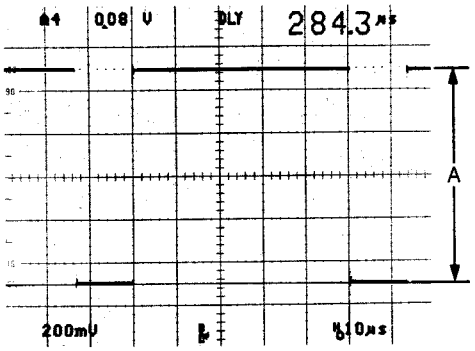 A = 1000 ± 40 mV p-p	KEY GAIN adjustment ⊘ RV516/DA-63 (H14)
STEP-3 • Change the Oscilloscope setting to 200 mS/DIV. Same as STEP-2 except above setting.	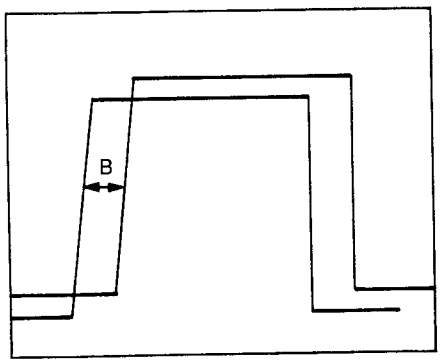 B = 1050 ± 30 nS • While changing S101 from 0 to F one level at a time, check that the phase of the waveform gradually delays. Also check that the above specification is satisfied when it changes from F to 0.	(Check)

3-3-11. PGM OUT COMPONENT Y GAIN Adjustment

FOR UC

Machine conditions for adjustment	Specifications	Adjusting Point
STEP-1 • Connection: Section 3-2-2 Connection • Extension board: Extend the DA-63 board with the EX-326 board. • Switch setting: S3-2/SY-172 (L10) = ON • Built-in color bar: COL BAR To select: See section 3-2-3.		
STEP-2 • (1) or (2) is used. (1) Waveform Monitor INPUT: CH-A MODE: WFM REF : EXT (2) Oscilloscope CH-1: 200 mV/DIV 10 µS/DIV TRIG: B.B (CH4)	COMPONENT 1 OUT Y 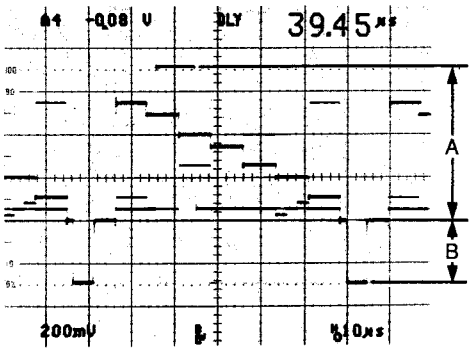 A = 714 ± 5 mV p-p B = 286 ± 4 mV p-p	A: Y GAIN adjustment ⊘ RV520/DA-63 (J14) B: SYNC LEVEL (Y) ⊘ RV518/DA-63 (H11)

(3-3-11. PGM OUT COMPONENT Y GAIN Adjustment)

FOR EK

Machine conditions for adjustment	Specifications	Adjusting Point
STEP-1 • Connection: Section 3-2-2 Connection • Extension board: Extend the DA-63 board with the EX-326 board. • Switch setting: S3-2/SY-172 (L10) = OFF • Built-in color bar: COL BAR To select: See section 3-2-3.		
STEP-2 • (1) or (2) is used. (1) Wavefrom Monitor INPUT: CH-A MODE: WFM REF : EXT (2) Oscilloscope CH-1: 200 mV/DIV 10 µS/DIV TRIG: B.B (CH4)	COMPONENT 1 OUT Y 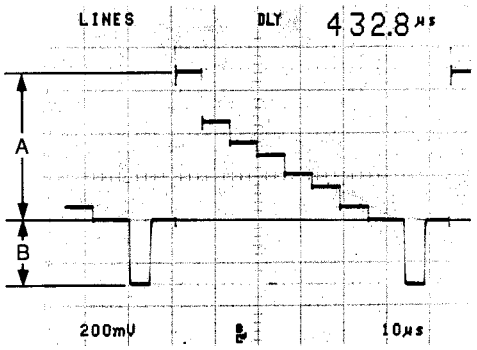 A = 700 ± 5 mV p-p B = 300 ± 4 mV p-p	A: Y GAIN adjustment ⊘ RV520/DA-63 (J14) B: SYNC LEVEL (Y) ⊘ RV518/DA-63 (H11)

3-3-12. PGM OUT BLK PHASE & WIDTH Adjustment

Machine conditions for adjustment	Specifications	Adjusting Point
STEP-1 • Connection: Section 3-2-2 Connection • Extension board: Extend the DA-63 board with the EX-326 board. • Switch setting: S3-2/SY-172 (L10) = ON(For UC) S3-2/SY-172 (L10) = OFF(For EK) • Built-in color bar: COL BKGD (100% WHITE) To select: See section 3-2-3.		
STEP-2 • (1) or (2) is used. (1) Waveform Monitor INPUT: CH-B1 MODE: WFM REF : EXT (2) Oscilloscope CH-1 : 200 mV/DIV 2 µS/DIV TRIG: B.B (CH4)	COMPONENT 1 OUT Y 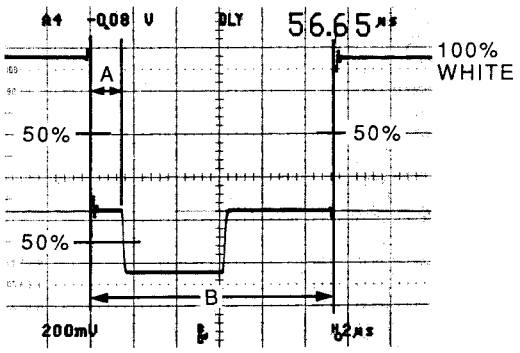 A = 1.5 ± 0.1 µS B = 10.9 ± 0.1 µS (For UC) 12.0 ± 0.1 µS (For EK) • Adjust ⊘RV6 and ⊘RV7 so that the specifications above are satisfied. • The 50% above indicates the 50% of the levels of both VIDEO and SYNC respectively.	A: BLK PHASE adjustment ⊘ RV7/DA-63 (B11) B: BLK WIDTH adjustment ⊘ RV6/DA-63 (B11)

3-3-13. PGM OUT COMPONENT R-Y GAIN Adjustment

FOR UC

Machine conditions for adjustment	Specifications	Adjusting Point
STEP-1 • Connection: Section 3-2-2 Connection • Extension board: Extend the DA-63 board with the EX-326 board. • Switch setting: S3-2/SY-172 (L10) = ON • Built-in color bar: COLOR BAR To select: See section 3-2-3.		
STEP-2 • (1) or (2) is Used. (1) Wavefrom Monitor INPUT: CH-B2 MODE: WFM REF : EXT (2) Oscilloscope CH-1: 200 mV/DIV 10 µS/DIV TRIG: B.B (CH-4)	COMPONENT 1 OUT R-Y 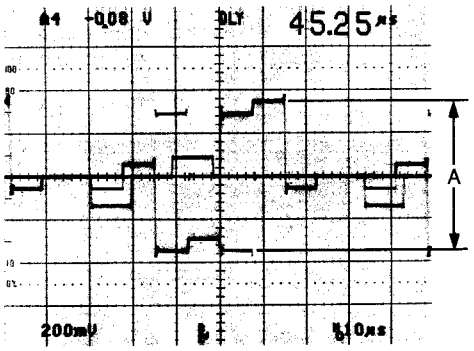 A = 700 ± 5 mV p-p	R-Y GAIN adjustment ● RV522/DA-63 (J14)

3-3-13. PGM OUT COMPONENT R-Y GAIN Adjustment)

FOR EK

Machine conditions for adjustment	Specifications	Adjusting Point
STEP-1 • Connection: Section 3-2-2 Connection • Extension board: Extend the DA-63 board with the EX-326 board. • Switch setting: S3-2/SY-172 (L10) = OFF • Built-in color bar: COLOR BAR To select: See section 3-2-3.		
STEP-2 • (1) or (2) is Used. (1) Wavefrom Monitor INPUT: CH-B2 MODE: WFM REF : EXT (2) Oscilloscope CH-1: 200 mV/DIV 10 µS/DIV TRIG: B.B (CH-4)	COMPONENT 1 OUT R-Y 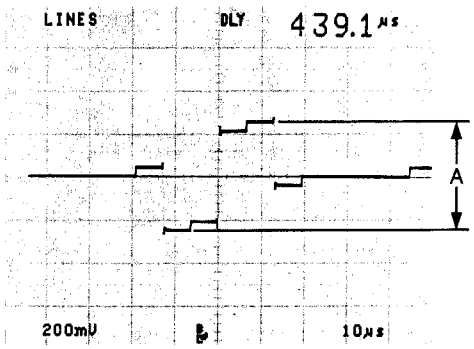 A = 525 ± 7 mV p-p	R-Y GAIN adjustment ● RV522/DA-63 (J14)

3-3-14. PGM OUT COMPONENT B-Y GAIN Adjustment

FOR UC

Machine conditions for adjustment	Specifications	Adjusting Point
STEP-1 • Connection:Section 3-2-2 Connection • Extension board: Extend the DA-63 board with the EX-326 board. • Switch setting: S3-2/SY-172 (L10) = ON • Built-in color bar: COL BAR To select: See section 3-2-3.		
STEP-2 • (1) or (2) is used. (1) Waveform Monitor INPUT: CH-B3 MODE: WFM REF : EXT (2) Oscilloscope CH-1: 200 mV/DIV 10 µS/DIV TRIG: B.B (CH-4)	COMPONENT 1 OUT B-Y 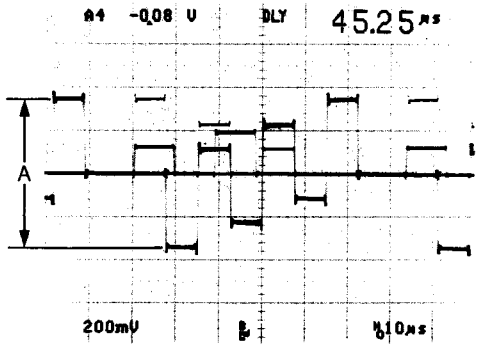 A = 700 ± 5 mV p-p	B-Y GAIN adjustment ⊘ RV524/DA-63 (J14)

(3-3-14. PGM OUT COMPONENT B-Y GAIN Adjustment)

FOR EK

Machine conditions for adjustment	Specifications	Adjusting Point
STEP-1 • Connection:Section 3-2-2 Connection • Extension board: Extend the DA-63 board with the EX-326 board. • Switch setting: S3-2/SY-172 (L10) = OFF • Built-in color bar: COL BAR To select: See section 3-2-3.		
STEP-2 • (1) or (2) is used. (1) Waveform Monitor INPUT: CH-B3 MODE: WFM REF : EXT (2) Oscilloscope CH-1: 200 mV/DIV 10 µS/DIV TRIG: B.B (CH-4)	COMPONENT 1 OUT B-Y 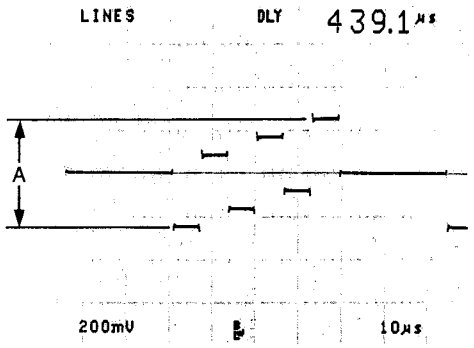 A = 525 ± 7 mV p-p	B-Y GAIN adjustment ⊘ RV524/DA-63 (J14)

3-3-15. Y/R-Y DELAY Adjustment

Machine conditions for adjustment	Specifications	Adjusting Point
STEP-1 • Connection: Section 3-2-2 Connection • Extension board: Extend the DA-63 board with the EX-326 board. • Switch setting: S3-2/SY-172 (L10) = ON(For UC) S3-2/SY-172 (L10) = OFF(For EK) • Built-in color bar: COL BAR To select: See section 3-2-3.		
STEP-2 • Observe the fourth gradation of the component color bars (line between green and magenta) by enlarging the time axis. • Waveform monitor INPUT: CH-B1 (COMPONENT Y) CH-B2 (COMPONENT R-Y) MODE: OVERLAY REF : EXT	CH-B1: PGM OUT (COMPONENT Y) CH-B2: PGM OUT (COMPONENT R-Y) 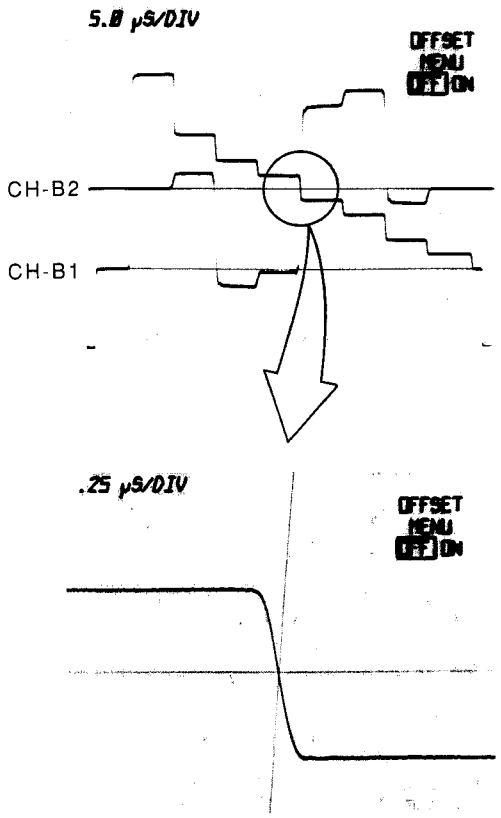 • Adjust so that the Y and R-Y signals have the same phase. (Adjust so that the line between green and magenta become equal.)	R-Y DELAY adjustment ⊘ RV521/DA-63 (H11)

3-3-16. Y/B-Y DELAY Adjustment

Machine conditions for adjustment	Specifications	Adjusting Point
STEP-1 • Connection: Section 3-2-2 Connection • Extension board: Extend the DA-63 board with the EX-326 board. • Switch setting: S3-2/SY-172 (L10) = ON(For UC) S3-2/SY-172 (L10) = OFF(For EK) • Built-in color bar: COL BAR To select:See section 3-2-3.		
STEP-2 • Observe the fourth gradation of the component color bars (line between green and magenta) by enlarging the time axis. • Waveform monitor INPUT: CH-B1 (COMPONENT Y) CH-B3 (COMPONENT B-Y) MODE: OVERLAY REF : EXT	CH-B1: PGM OUT (COMPONENT Y) CH-B3: PGM OUT (COMPONENT B-Y) 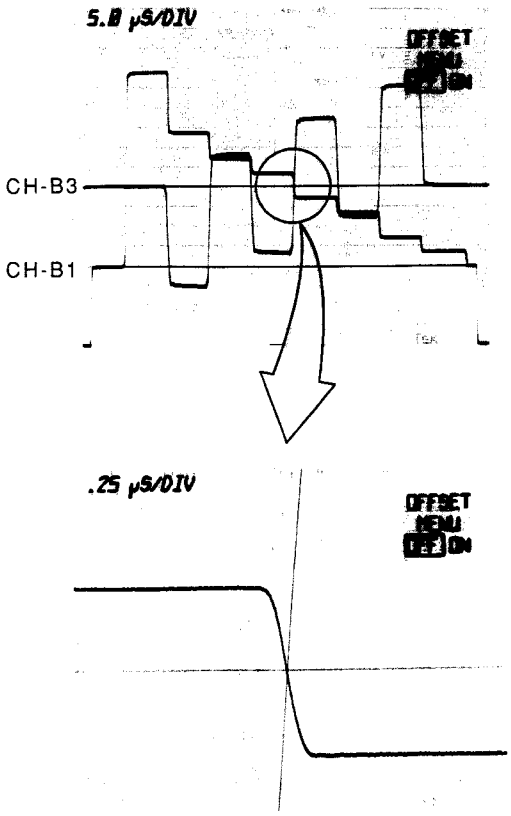 • Adjust so that the Y and B-Y signals have the same phase. (Adjust so that the line between green and magenta become equal.)	B-Y DELAY adjustment ⊘ RV523/DA-63 (J11)

3-3-17. COMPOSITE SC LEAK BALANCE Adjustment

FOR UC

Machine conditions for adjustment	Specifications	Adjusting Point
STEP-1 • Connection: Section 3-2-2 Connection • Extension board: Extend the DA-63 board with the EX-326 board. • Switch setting: S3-2/SY-172 (L10) = ON • Built-in color bar: COL BAR To select: See section 3-2-3.		
STEP-2 • (1) or (2) is used. (1) Waveform Monitor INPUT: CH-A MODE: WFM REF : EXT (2) Oscilloscope CH-1: 100 mV/DIV 2 µS/DIV TRIG: B.B (CH-4)	COMPOSITE OUT-1 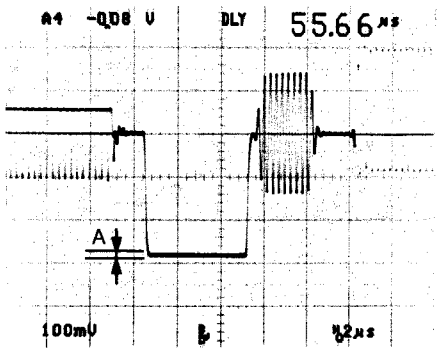 A = Below 20 mV p-p (Adjust to minimum.)	SC LEAK (R-Y) adjustment ⊘ RV511/DA-63 (H7) SC LEAK (B-Y) adjustment ⊘ RV514/DA-63 (H8)

(3-3-17. COMPOSITE SC LEAK BALANCE Adjustment)

FOR EK

Machine conditions for adjustment	Specifications	Adjusting Point
STEP-1 • Connection: Section 3-2-2 Connection • Extension board: Extend the DA-63 board with the EX-326 board. • Switch setting: S3-2/SY-172 (L10) = OFF • Built-in color bar: COL BAR To select: See section 3-2-3.		
STEP-2 • (1) or (2) is used. (1) Waveform Monitor INPUT: CH-A MODE: WFM REF : EXT (2) Oscilloscope CH-1: 100 mV/DIV 2 µS/DIV TRIG: B.B (CH-4)	COMPOSITE OUT-1 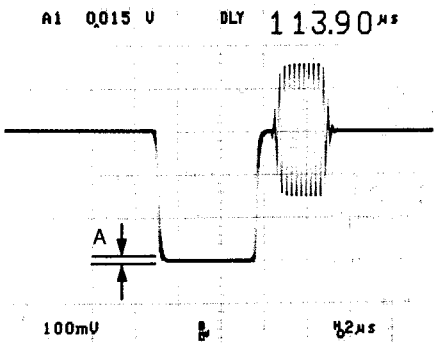 A = Below 20 mV p-p (Adjust to minimum.)	SC LEAK (R-Y) adjustment ⊘ RV511/DA-63 (H7) SC LEAK (B-Y) adjustment ⊘ RV514/DA-63 (H8)

3-3-18. COMPOSITE Y GAIN Adjustment

FOR UC

Machine conditions for adjustment	Specifications	Adjusting Point
STEP-1 • Connection: Section 3-2-2 Connection • Extension board: Extend the DA-63 board with the EX-326 board. • Switch setting: S3-2/SY-172 (L10) = ON • Built-in color bar: COL BAR To select: See section 3-2-3.		
STEP-2 • (1) or (2) is used. (1) Waveform Monitor INPUT: CH-A MODE: WFM REF : EXT (2) Oscilloscope CH-1: 200 mV/DIV 10 µS/DIV TRIG: B.B (CH-4)	COMPOSITE OUT-1 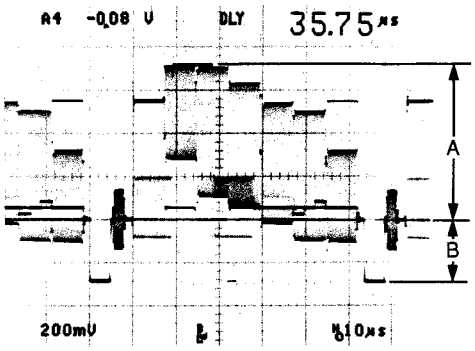 A = 714 ± 5 mV p-p B = 286 ± 4 mV p-p	A: COMPOSITE GAIN adjustment ⊘ RV507/DA-63 (K14) B: SYNC LEVEL adjustment ⊘ RV504/DA-63 (L10)

(3-3-18. COMPOSITE Y GAIN Adjustment)

FOR EK

Machine conditions for adjustment	Specifications	Adjusting Point
STEP-1 • Connection: Section 3-2-2 Connection • Extension board: Extend the DA-63 board with the EX-326 board. • Switch setting: S3-2/SY-172 (L10) = OFF • Built-in color bar: COL BAR To select: See section 3-2-3.		
STEP-2 • (1) or (2) is used. (1) Waveform Monitor INPUT: CH-A MODE: WFM REF : EXT (2) Oscilloscope CH-1: 200 mV/DIV 10 µS/DIV TRIG: B.B (CH-4)	COMPOSITE OUT-1 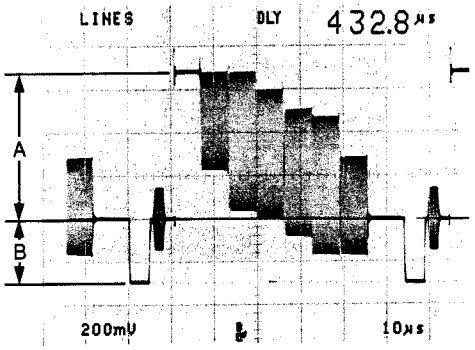 A = 700 ± 5 mV p-p B = 300 ± 4 mV p-p	A: COMPOSITE GAIN adjustment ⊘ RV507/DA-63 (K14) B: SYNC LEVEL adjustment ⊘ RV504/DA-63 (L10)

3-3-19. MODURATION AXIS Adjustment (FOR UC ONLY)

Machine conditions for adjustment	Specifications	Adjusting Point
STEP-1 • Connection: Section 3-2-2 Connection • Extension board: Extend the DA-63 board with the EX-326 board. • Switch setting: S3-2/SY-172 (L10) = ON		
STEP-2 • Select the INPUT 1 of BACKGROUND and FOREGROUND. • Setting the S1 of COMPONENT in the AD-76 board. • Disconnect CH-2 of the signal generator (TSG-300). (Disconnect B-Y signal) • Vectorscope 75%, SET UP L.DISP : VECT INPUT : CH-A FILTER: FLAT REF : EXT	PGM OUT (COMPOSITE) 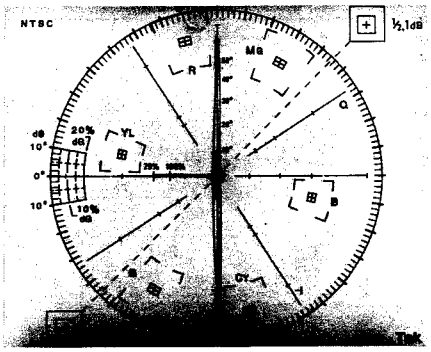 • Adjust the phase shift knob of the vectorscope until its luminance points form a vertical line.	
STEP-3 • Connect the CH-2 of the signal generator (TSG-300) and disconnect CH-3. (Disconnect B-Y signal) • Vectorscope 75%, SET UP L.DISP : VECT INPUT : CH-A FILTER: FLAT REF : EXT	PGM OUT (COMPOSITE) 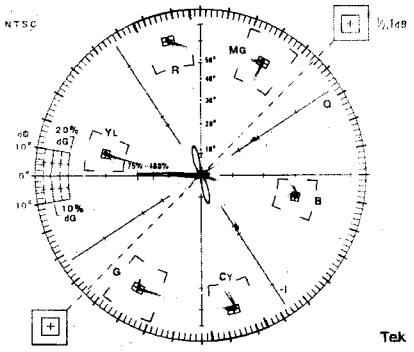 • Adjust ⊘RV301 until the luminance points on the vectorscope form a horizontal line.	MODURATION AXIS adjustment ⊘ RV301/DA-63 (E8)

3-3-20. COMPOSITE C GAIN Adjustment

FOR UC

Machine conditions for adjustment	Specifications	Adjusting Point
STEP-1 • Connection: Section 3-2-2 Connection • Extension board: Extend the DA-63 board with the EX-326 board. • Switch setting: S3-2/SY-172 (L10) = ON • Built-in color bar: COL BAR To select: See section 3-2-3.		
STEP-2 • Vectorscope 75%, SET UP L.DISP : VECT INPUT : CH-A FILTER: FLAT REF : EXT	COMPOSITE OUT-1 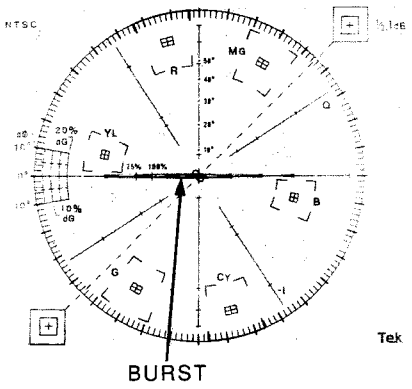 BURST All luminance points should be inside the respective "⊞" mark on the vectorscope. • Adjust ⊘RV506 and ⊘RV521 so that MG, B, CY, G, YL and R satisfy the above specifications.	C LEVEL adjustment ⊘ RV506/DA-63 (L11) B-Y AXIS LEVEL adjustment ⊘ RV512/DA-63 (H8)

(3-3-20. COMPOSITE C GAIN Adjustment)

FOR EK

Machine conditions for adjustment	Specifications	Adjusting Point
STEP-1 • Connection: Section 3-2-2 Connection • Extension board: Extend the DA-63 board with the EX-326 board. • Switch setting: S3-2/SY-172 (L10) = OFF • Built-in color bar: COL BAR To select: See section 3-2-3.		
STEP-2 • Vectorscope 75% L.DISP : VECT INPUT : CH-A FILTER: FLAT REF : EXT	COMPOSITE OUT-1 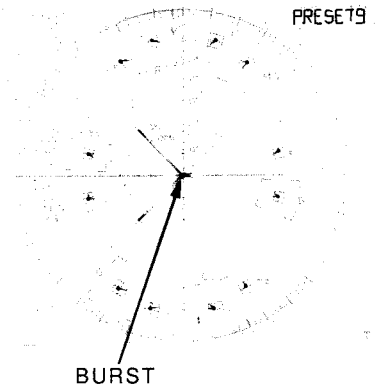 All luminance points should be inside the respective "田" mark on the vectorscope. • Adjust ⊘RV506 and ⊘RV521 so that MG, mg, B, b, CY, cy, G, g, YL, yl, R and r satisfy the above specifications.	C LEVEL adjustment ⊘ RV506/DA-63 (L11) B-Y AXIS LEVEL adjustment ⊘ RV512/DA-63 (H8)

3-3-21. COMPOSITE BURST BALANCE Adjustment (FOR EK ONLY)

Machine conditions for adjustment	Specifications	Adjusting Point
STEP-1 • Connection: Section 3-2-2 Connection • Extension board: Extend the DA-63 board with the EX-326 board. • Switch setting: S3-2/SY-172 (L10) = OFF		
STEP-2 • Vectorscope 75% L.DISP : VECT INPUT : CH-A FILTER: FLAT REF : EXT	COMPOSITE OUT-1 NG 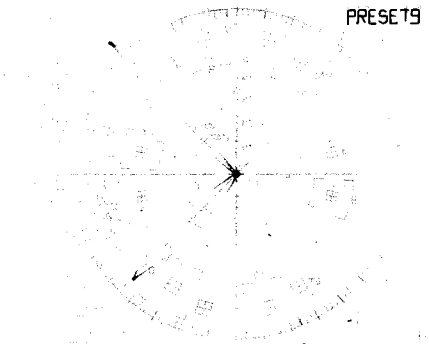 OK 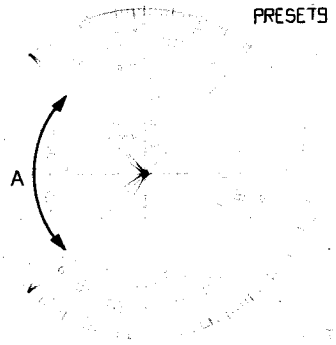 A = 90 ± 0.5° • Set the spot of BURST on the position of circumference by GAIN control on the vector scope. Then adjust ⊘RV513 so that A is the specification.	BURST BALANCE adjustment ⊘ RV513/DA-63 (H7)

3-3-22. COMPOSITE BURST LEVEL Adjustment

FOR UC

Machine conditions for adjustment	Specifications	Adjusting Point
STEP-1 • Connection: Section 3-2-2 Connection • Extension board: Extend the DA-63 board with the EX-326 board. • Switch setting: S3-2/SY-172 (L10) = ON • Built-in color bar: COL BAR To select: See section 3-2-3.		
STEP-2 • (1) or (2) is used. (1) Waveform Monitor INPUT: CH-A MODE: WFM REF : EXT (2) Oscilloscope CH-1: 100 mV/DIV 2 µS/DIV TRIG: B.B (CH-4)	COMPOSITE OUT-1 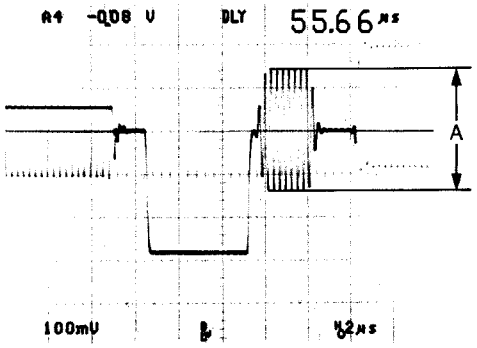 A = 286 ± 4 mV p-p	BURST LEVEL (PGM) adjustment ● RV525/DA-63 (H10)

(3-3-22. COMPOSITE BURST LEVEL Adjustment)

FOR EK

Machine conditions for adjustment	Specifications	Adjusting Point
STEP-1 • Connection: Section 3-2-2 Connection • Extension board: Extend the DA-63 board with the EX-326 board. • Switch setting: S3-2/SY-172 (L10) = OFF • Built-in color bar: COL BAR To select: See section 3-2-3.		
STEP-2 • (1) or (2) is used. (1) Waveform Monitor INPUT: CH-A MODE: WFM REF : EXT (2) Oscilloscope CH-1: 100 mV/DIV 2 μS/DIV TRIG: B.B (CH-4)	COMPOSITE OUT-1 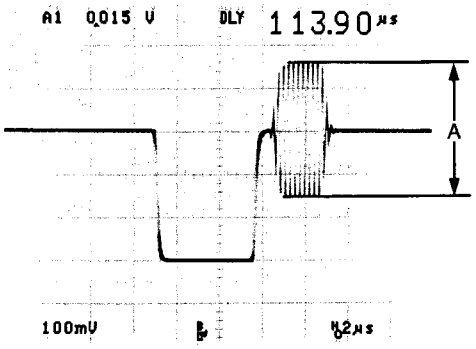 A = 300 ± 4 mV p-p	BURST LEVEL (PGM) adjustment ⊘ RV525/DA-63 (H10)

3-3-23. Y/C (S) Y GAIN Adjustment

FOR UC

Machine conditions for adjustment	Specifications	Adjusting Point
STEP-1 • Connection: Section 3-2-2 Connection • Extension board: Extend the DA-63 board with the EX-326 board. • Switch setting: S3-2/SY-172 (L10) = ON • Built-in color bar: COL BAR To select: See section 3-2-3.		
STEP-2 • (1) or (2) is used. (1) Waveform Monitor INPUT: CH-A MODE: WFM REF : EXT (2) Oscilloscope CH-1: 200 mV/DIV 10 μS/DIV TRIG: B.B (CH-4)	Y/C-1 OUT Y 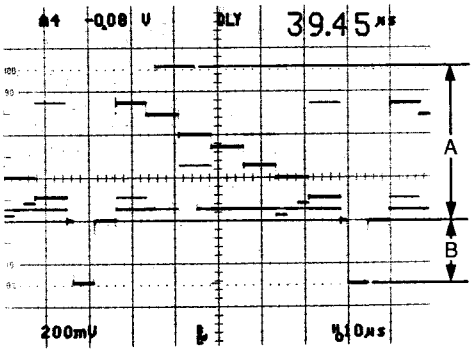 A = 714 ± 5 mV p-p B = 286 ± 4 mV p-p	S-Y GAIN adjustment ⊘ RV508/DA-63 (K14)

3-3-23. Y/C (S) Y GAIN Adjustment)

FOR EK

Machine conditions for adjustment	Specifications	Adjusting Point
STEP-1 • Connection: Section 3-2-2 Connection • Extension board: Extend the DA-63 board with the EX-326 board. • Switch setting: S3-2/SY-172 (L10) = OFF • Built-in color bar: COL BAR To select: See section 3-2-3.		
STEP-2 • (1) or (2) is used. (1) Waveform Monitor INPUT: CH-A MODE: WFM REF : EXT (2) Oscilloscope CH-1: 200 mV/DIV 10 µS/DIV TRIG: B.B (CH-4)	Y/C-1 OUT Y 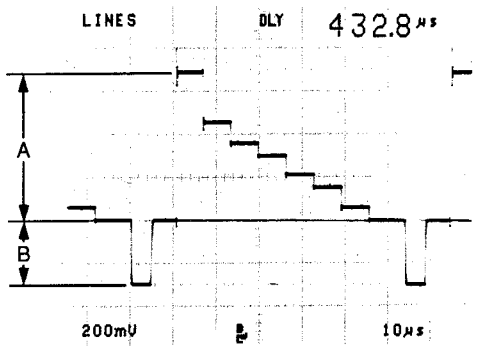 A = 700 ± 5 mV p-p B = 300 ± 4 mV p-p	S-Y GAIN adjustment ● RV508/DA-63 (K14)

3-3-24. Y/C (S) C GAIN Adjustment

FOR UC

Machine conditions for adjustment	Specifications	Adjusting Point
STEP-1 • Connection: Section 3-2-2 Connection • Extension board: Extend the DA-63 board with the EX-326 board. • Switch setting: S3-2/SY-172 (L10) = ON • Built-in color bar: COL BAR To select: See section 3-2-3.		
STEP-2 • Vectorscope 75%, SET UP L.DISP : VECT INPUT : CH-A FILTER: FLAT REF : EXT	Y/C-1 OUT C 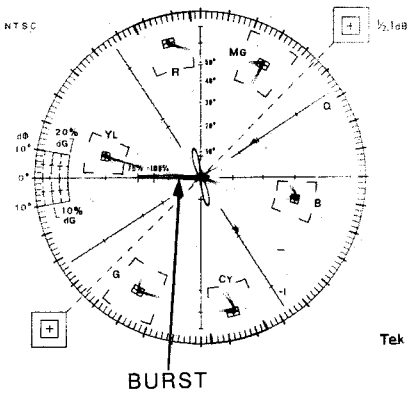 BURST All luminance points should be inside the respective "田" mark on the vectorscope. • Adjust ◐RV509 so that MG, B, CY, G, YL and R satisfy the above specifications.	S-C GAIN adjustment ◐ RV509/DA-63 (K14)
STEP-3 • (1) or (2) is used. (1) Waveform Monitor INPUT: CH-A MODE: WFM REF : EXT (2) Oscilloscope CH-1: 200 mV/DIV 10 µS/DIV TRIG: B.B (CH-4)	Y/C-1 OUT C 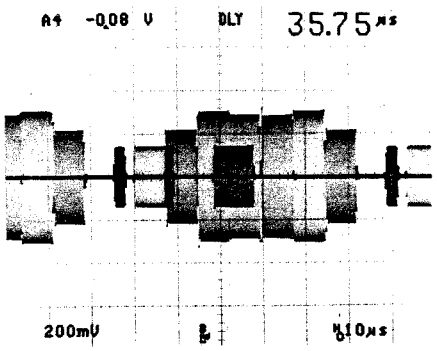 • Check that the above waveform is displayed.	(Check)

(3-3-24. Y/C (S) C GAIN Adjustment)

FOR EK

Machine conditions for adjustment	Specifications	Adjusting Point
STEP-1 › Connection: Section 3-2-2 Connection › Extension board: Extend the DA-63 board with the EX-326 board. • Switch setting: S3-2/SY-172 (L10) = OFF › Built-in color bar: COL BAR To select: See section 3-2-3.		
STEP-2 • Vectorscope 75% L.DISP : VECT INPUT : CH-A FILTER: FLAT REF : EXT	Y/C-1 OUT C 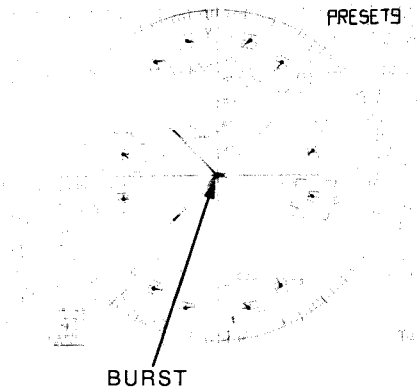 All luminance points should be inside the respective "田" mark on the vectorscope. • Adjust ⊘RV509 so that MG, mg, B, b, CY, cy, G, g, YL, yl, R and r satisfy the above specifications.	S-C GAIN adjustment ⊘ RV509/DA-63 (K14)
STEP-3 • (1) or (2) is used. (1) Waveform Monitor INPUT: CH-A MODE: WFM REF : EXT (2) Oscilloscope CH-1: 200 mV/DIV 10 µS/DIV TRIG: B.B (CH-4)	Y/C-1 OUT C 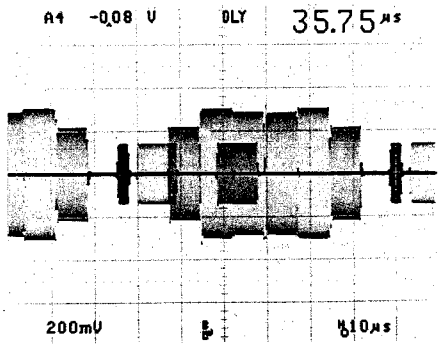 • Check that the above waveform is displayed.	(Check)

3-4. AD-76 BOARD ADJUSTMENTS

3-4-1. COMPONENT CLAMP LEVEL Adjustment

FOR UC

NOTE: Perform this adjustment after completing all the adjustments for the DA-63 board.

Machine conditions for adjustment	Specifications	Adjusting Point
STEP-1 • Connection: Section 3-2-2 Connection • Extension board: Extend the AD-76 board with the EX-326 board. • Test signal: COMPONENT 100% Color Bars • Switch setting: S1/AD-76 (D1) = COMPONENT S3-2/SY-172 (L10) = ON • Control panel setting: 1. PATTERN NUMBER = 4 (REVERSE = OFF) 2. FADER LEVER = Move it fully to the top and bottom several times and set it at the top. 3. BACKGROUND BUS = 1, FOREGROUND BUS = 2 After completing the above settings, check that the Y signal has been output. Test points When adjusting A BUS: TP141/AD-76 (D13) When adjusting B BUS: TP241/AD-76 (J12) When the waveform is not displayed Press the AUTO TRANS button and check that the Y signal has been output at the test point of the adjusted bus. 4. FOREGROUND BUS = INT VIDEO (COL BAR) **NOTE:** Adjust A BUS and B BUS in the same way for each bus.		

(3-4-1. COMPONENT CLAMP LEVEL Adjustment)

OR UC

Machine conditions for adjustment	Specifications	Adjusting Point
STEP-2 • Waveform monitor INPUT: CH-B1 MODE: WFM REF : EXT	PGM OUT (COMPONENT Y) NG 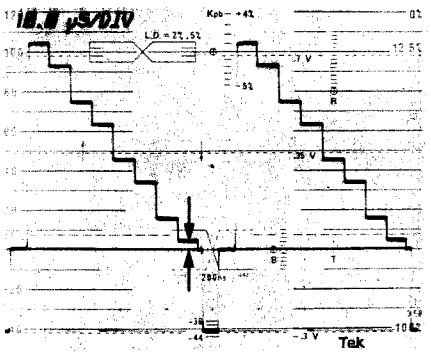 OK 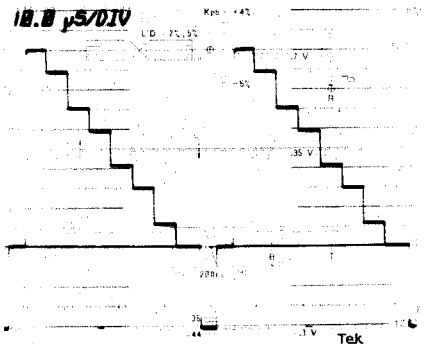 • Adjust so that the difference in the pedestal steps becomes 0.	A BUS: Y DC adjustment ⊘ RV121/AD-76 (D12) B BUS: Y DC adjustment ⊘ RV221/AD-76 (J12)

(3-4-1. COMPONENT CLAMP LEVEL Adjustment)

FOR UC

Machine conditions for adjustment	Specifications	Adjusting Point
STEP-3 • Waveform monitor INPUT: CH-B2 MODE: WFM REF : EXT	PGM OUT (COMPONENT R-Y) NG 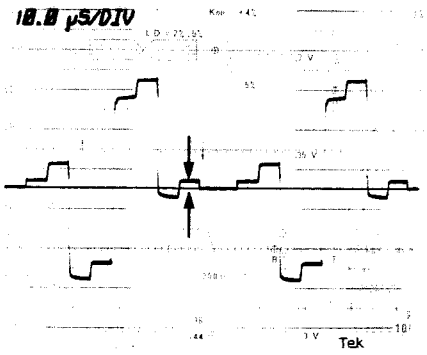 OK 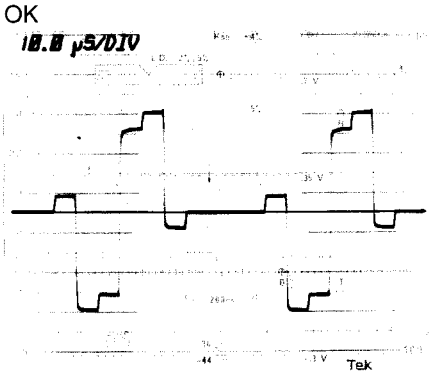 • Adjust so that the difference in the pedestal steps becomes 0.	A BUS: R-Y DC adjustment ● RV122/AD-76 (C12) B BUS: R-Y DC adjustment ● RV222/AD-76 (L12)

(3-4-1. COMPONENT CLAMP LEVEL Adjustment)

FOR UC

Machine conditions for adjustment	Specifications	Adjusting Point
STEP-4 • Waveform monitor INPUT: CH-B3 MODE: WFM REF : EXT	PGM OUT (COMPONENT B-Y) NG 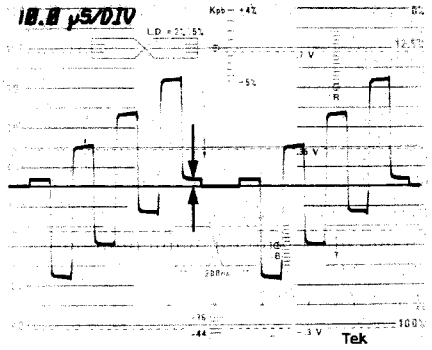 OK 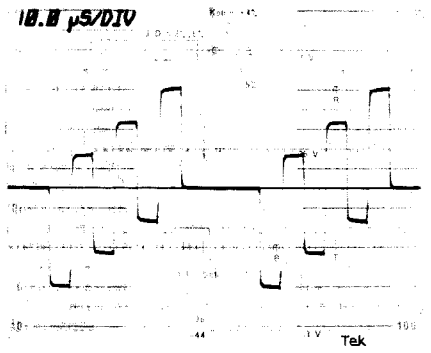 • Adjust so that the difference in the pedestal steps becomes 0.	A BUS: B-Y DC adjustment ⊘ RV123/AD-76 (B12) B BUS: B-Y DC adjustment ⊘ RV223/AD-76 (K12)

(3-4-1. COMPONENT CLAMP LEVEL Adjustment)

FOR EK

NOTE: Perform this adjustment after completing all the adjustments for the DA-63 board.

Machine conditions for adjustment	Specifications	Adjusting Point
STEP-1 • Connection: Section 3-2-2 Connection • Extension board: Extend the AD-76 board with the EX-326 board. • Test signal: COMPONENT 75% Color Bars • Switch setting: S1/AD-76 (D1) = COMPONENT S3-2/SY-172 (L10) = OFF • Control panel setting: 1. PATTERN NUMBER = 4 (REVERSE = OFF) 2. FADER LEVER = Move it fully to the top and bottom several times and set it at the top. 3. BACKGROUND BUS = 1, FOREGROUND BUS = 2 After completing the above settings, check that the Y signal has been output. Test points When adjusting A BUS: TP141/AD-76 (D13) When adjusting B BUS: TP241/AD-76 (J12) When the waveform is not displayed Press the AUTO TRANS button and check that the Y signal has been output at the test point of the adjusted bus. 4. FOREGROUND BUS = INT VIDEO (COL BAR) **NOTE:** Adjust A BUS and B BUS in the same way for each bus.		

(3-4-1. COMPONENT CLAMP LEVEL Adjustment)

ƆR EK

Machine conditions for adjustment	Specifications	Adjusting Point
STEP-2 • Waveform monitor INPUT: CH-B1 MODE: WFM REF : EXT	PGM OUT (COMPONENT Y) NG 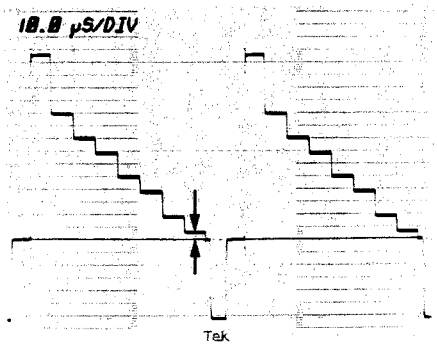 OK 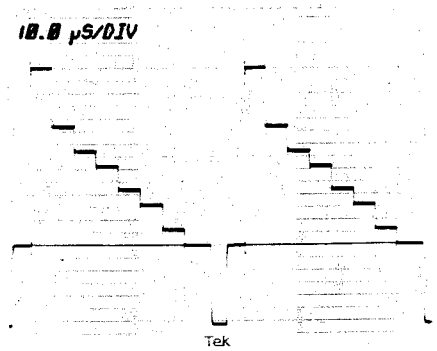 • Adjust so that the difference in the pedestal steps becomes 0.	A BUS: Y DC adjustment ⊘ RV121/AD-76 (D12) B BUS: Y DC adjustment ⊘ RV221/AD-76 (J12)

(3-4-1. COMPONENT CLAMP LEVEL Adjustment)

FOR EK

Machine conditions for adjustment	Specifications	Adjusting Point
STEP-3 • Waveform monitor INPUT: CH-B2 MODE: WFM REF : EXT	PGM OUT (COMPONENT R-Y) NG 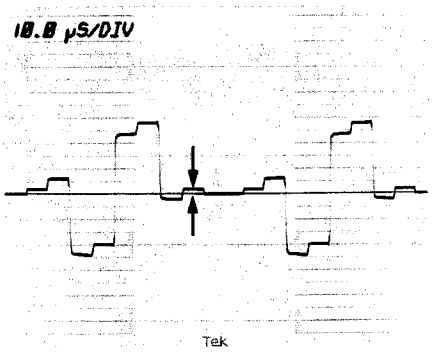 OK 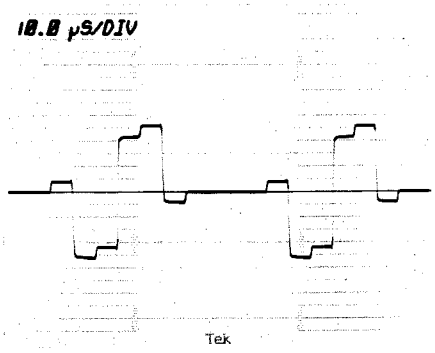 • Adjust so that the difference in the pedestal steps becomes 0.	A BUS: R-Y DC adjustment ⊘ RV122/AD-76 (C12) B BUS: R-Y DC adjustment ⊘ RV222/AD-76 (L12)

(3-4-1. COMPONENT CLAMP LEVEL Adjustment)

FOR EK

Machine conditions for adjustment	Specifications	Adjusting Point
STEP-4 • Waveform monitor INPUT: CH-B3 MODE: WFM REF : EXT	PGM OUT (COMPONENT B-Y) NG 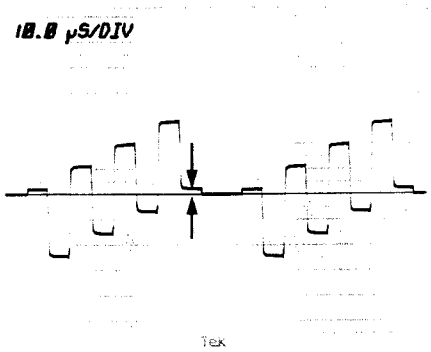 OK 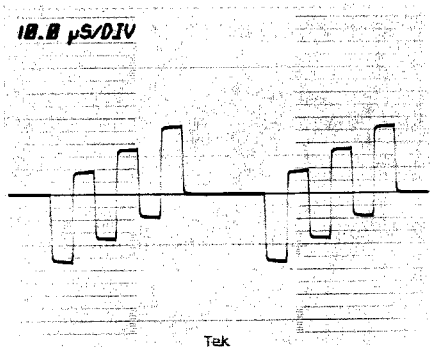 • Adjust so that the difference in the pedestal steps becomes 0.	A BUS: B-Y DC adjustment ⊘ RV123/AD-76 (B12) B BUS: B-Y DC adjustment ⊘ RV223/AD-76 (K12)

3-4-2. COMPONENT Y LEVEL Adjustment

FOR UC

NOTE: Perform this adjustment after completing all the adjustments for the DA-63 board.

<table>
<tr><th>Machine conditions for adjustment</th><th>Specifications</th><th>Adjusting Point</th></tr>
<tr><td colspan="3">STEP-1
• Connection: Section 3-2-2 Connection
• Extension board: Extend the AD-76 board with the EX-326 board.
• Test signal: 100% Color Bars
• Switch setting: S1/AD-76 (D1) = COMPONENT
S3-2/SY-172 (L10) = ON
• Control panel setting:
1. PATTERN NUMBER = 4 (REVERSE = OFF)
2. FADER LEVER = Move it fully to the top and bottom several times and set it at the top.
3. BACKGROUND BUS = 1, FOREGROUND BUS = 2
After completing the above settings, check that the Y signal has been output.
Test points When adjusting A BUS: TP141/AD-76 (D13)
When adjusting B BUS: TP241/AD-76 (J12)
When the waveform is not displayed
Press the AUTO TRANS button and check that the Y signal has been output at the test point of the adjusted bus.
4. FOREGROUND BUS = INT VIDEO (COL BAR)

NOTE: Adjust A BUS and B BUS in the same way for each bus.</td></tr>
<tr><td>STEP-2
• Position of the fader lever:
In the vicinity of the center
• The color bars of input 1 and the white(100%) of the built-in color bar should be seen simultaneously.

• Waveform monitor
INPUT: CH-B1
MODE: WFM
REF : EXT</td><td>PGM OUT (COMPONENT Y)
 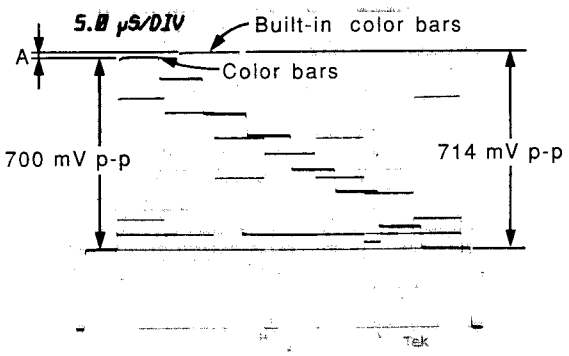

A = 14 mV p-p
• Adjust so that the difference between the color bars (Y) of input 1 and the built-in color bars (Y) becomes 14 mV p-p.</td><td>A BUS: CPNT Y GAIN adjustment
⊘ RV117/AD-76 (D10)

B BUS: CPNT Y GAIN adjustment
⊘ RV217/AD-76 (J11)</td></tr>
</table>

(3-4-2. COMPONENT Y LEVEL Adjustment)

FOR EK

NOTE: Perform this adjustment after completing all the adjustments for the DA-63 board.

Machine conditions for adjustment	Specifications	Adjusting Point
STEP-1 • Connection: Section 3-2-2 Connection • Extension board: Extend the AD-76 board with the EX-326 board. • Test signal: 75% Color Bars • Switch setting: S1/AD-76 (D1) = COMPONENT S3-2/SY-172 (L10) = OFF • Control panel setting: 1. PATTERN NUMBER = 4 (REVERSE = OFF) 2. FADER LEVER = Move it fully to the top and bottom several times and set it at the top. 3. BACKGROUND BUS = 1, FOREGROUND BUS = 2 After completing the above settings, check that the Y signal has been output. Test points When adjusting A BUS: TP141/AD-76 (D13) When adjusting B BUS: TP241/AD-76 (J12) When the waveform is not displayed Press the AUTO TRANS button and check that the Y signal has been output at the test point of the adjusted bus. 4. FOREGROUND BUS = INT VIDEO (COL BAR) **NOTE:** Adjust A BUS and B BUS in the same way for each bus.		
STEP-2 • Position of the fader lever: In the vicinity of the center • The color bars of input 1 and the white(100%) of the built-in color bar should be seen simultaneously. • Waveform monitor INPUT: CH-B1 MODE: WFM REF : EXT	PGM OUT (COMPONENT Y) 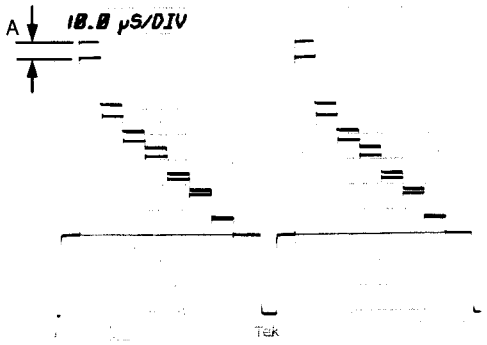 A = 0 mV • Adjust so that the difference between the color bars (Y) of input 1 and the built-in color bars (Y) becomes 0 mV. (The color bars (Y) of input 1 and the built-in color bars (Y) is 700 mV.)	A BUS: CPNT Y GAIN adjustment ⊘ RV117/AD-76 (D10) B BUS: CPNT Y GAIN adjustment ⊘ RV217/AD-76 (J11)

3-4-3. COMPONENT CHROMA LEVEL Adjustment

FOR UC

NOTE: Perform this adjustment after completing all the adjustments for the DA-63 board.

Machine conditions for adjustment	Specifications	Adjusting Point

STEP-1

- Connection: Section 3-2-2 Connection
- Extension board: Extend the AD-76 board with the EX-326 board.
- Test signal: 100% Color Bars
- Switch setting: S1/AD-76 (D1) = COMPONENT
  S3-2/SY-172 (L10) = ON
- Control panel setting:
  1. PATTERN NUMBER = 4 (REVERSE = OFF)
  2. FADER LEVER=Move it fully to the top and bottom several times and set it at the top.
  3. BACKGROUND BUS = 1, FOREGROUND BUS = 2
     After completing the above settings, check that the Y signal has been output.
     Test points When adjusting A BUS: TP141/AD-76 (D13)
     When adjusting B BUS: TP241/AD-76 (J12)
     When the waveform is not displayed
     Press the AUTO TRANS button and check that the Y signal has been output at the test point of the adjusted bus.
  4. FOREGROUND BUS = INT VIDEO (COL BAR)

NOTE: Adjust A BUS and B BUS in the same way for each bus.

(3-4-3. COMPONENT CHROMA LEVEL Adjustment)

OR UC

Machine conditions for adjustment	Specifications	Adjusting Point
STEP-2 • Position of fader lever: In the vicinity of the center	PGM OUT (COMPONENT R-Y) NG 5.0 µS/DIV 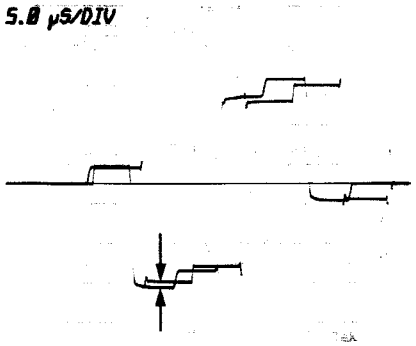 OK 5.0 µS/DIV 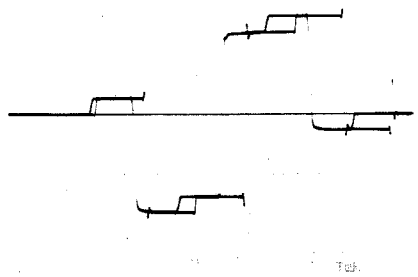	A BUS: CPNT R-Y GAIN adjustment ⊘ RV118/AD-76 (C11) B BUS: CPNT R-Y GAIN adjustment ⊘ RV218/AD-76 (L11)
• Waveform monitor INPUT: CH-B2 MODE: WFM REF : EXT	• Adjust so that the amplitudes of the color bars (R-Y) of input 1 and the built-in color bars (R-Y) become equal.	

(3-4-3. COMPONENT CHROMA LEVEL Adjustment)

FOR UC

Machine conditions for adjustment	Specifications	Adjusting Point
STEP-3 • Position of fader lever: In the vicinity of the center	PGM OUT (COMPONENT B-Y) NG 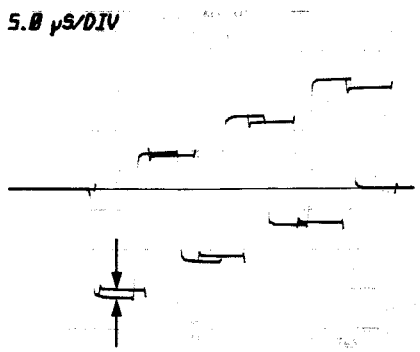 OK 	A BUS: CPNT B-Y GAIN adjustment ⊘ RV119/AD-76 (B11) B BUS: CPNT B-Y GAIN adjustment ⊘ RV219/AD-76 (K11)
• Waveform monitor INPUT: CH-B3 MODE: WFM REF : EXT	• Adjust so that the amplitudes of the color bars (B-Y) of input 1 and the built-in color bars (B-Y) become equal.	

3-4-3. COMPONENT CHROMA LEVEL Adjustment)

FOR EK

OTE: Perform this adjustment after completing all the adjustments for the DA-63 board.

Machine conditions for adjustment	Specifications	Adjusting Point
STEP-1 • Connection: Section 3-2-2 Connection • Extension board:Extend the AD-76 board with the EX-326 board. • Test signal: 75% Color Bars • Switch setting: S1/AD-76 (D1) = COMPONENT S3-2/SY-172 (L10) = OFF • Control panel setting: 1. PATTERN NUMBER = 4 (REVERSE = OFF) 2. FADER LEVER = Move it fully to the top and bottom several times and set it at the top. 3. BACKGROUND BUS = 1, FOREGROUND BUS = 2 After completing the above settings, check that the Y signal has been output. Test points When adjusting A BUS: TP141/AD-76 (D13) When adjusting B BUS: TP241/AD-76 (J12) When the waveform is not displayed Press the AUTO TRANS button and check that the Y signal has been output at the test point of the adjusted bus. 4. FOREGROUND BUS = INT VIDEO (COL BAR) **NOTE:** Adjust A BUS and B BUS in the same way for each bus.		

(3-4-3. COMPONENT CHROMA LEVEL Adjustment)

FOR EK

Machine conditions for adjustment	Specifications	Adjusting Point
STEP-2 • Position of fader lever: In the vicinity of the center • Waveform monitor INPUT: CH-B2 MODE: WFM REF : EXT	PGM OUT (COMPONENT R-Y) NG 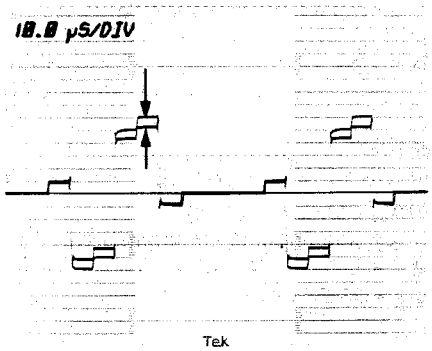 OK 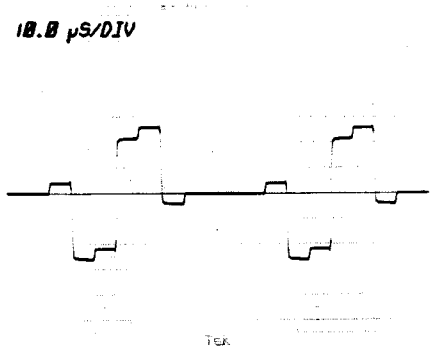 • Adjust so that the amplitudes of the color bars (R-Y) of input 1 and the built-in color bars (R-Y) become equal.	A BUS: CPNT R-Y GAIN adjustment ⊘ RV118/AD-76 (C11) B BUS: CPNT R-Y GAIN adjustment ⊘ RV218/AD-76 (L11)

(J-4-3. COMPONENT CHROMA LEVEL Adjustment)

FOR EK

Machine conditions for adjustment	Specifications	Adjusting Point
STEP-3 • Position of fader lever: In the vicinity of the center	PGM OUT (COMPONENT B-Y) NG 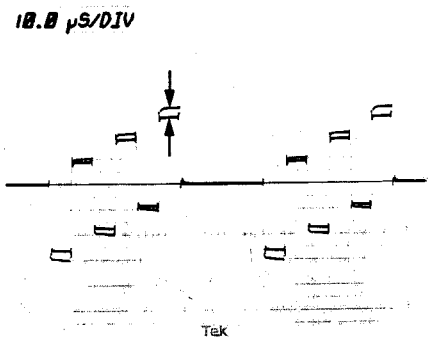 OK 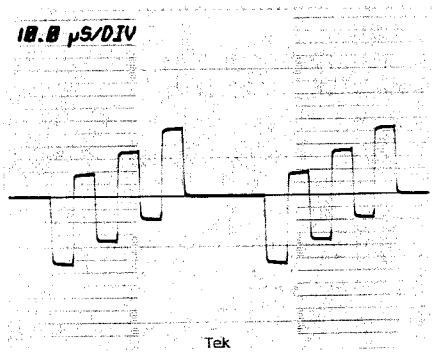 	A BUS: CPNT B-Y GAIN adjustment ⊘ RV119/AD-76 (B11) B BUS: CPNT B-Y GAIN adjustment ⊘ RV219/AD-76 (K11)
• Waveform monitor INPUT: CH-B3 MODE: WFM REF : EXT	• Adjust so that the amplitudes of the color bars (B-Y) of input 1 and the built-in color bars (B-Y) become equal.	

3-4-4. W HD PHASE Adjustment

FOR UC

Machine conditions for adjustment	Specifications	Adjusting Point
STEP-1 • Connection: Section 3-2-2 Connection • Extension board: Extend the AD-76 board with the EX-326 board. • Test signal: 100% Color Bars • Switch setting: S1/AD-76 (D1) = COMPONENT S3-2/SY-172 (L10) = ON **NOTE:** Adjust A BUS and B BUS in the same way for each bus.		
STEP-2 • Digital voltmeter	A BUS: TP163/AD-76 (A9) B BUS: TP263/AD-76 (M13) 2.8 V dc	A BUS: VFO BIAS adjustment ⊘ LV101/AD-76 (B10) B BUS: VFO BIAS adjustment ⊘ LV201/AD-76 (N13)
STEP-3 • Oscilloscope MODE: DELAY CH-1 : 5 V/DIV 10 µS/DIV CH-2 : 2 V/DIV 200 mS/DIV TRIG : CH-1	A BUS CH-1: TP156/AD-76 (A7) CH-2: TP158/AD-76 (A8) B BUS CH-1: TP256/AD-76 (M10) CH-2: TP258/AD-76 (M11) 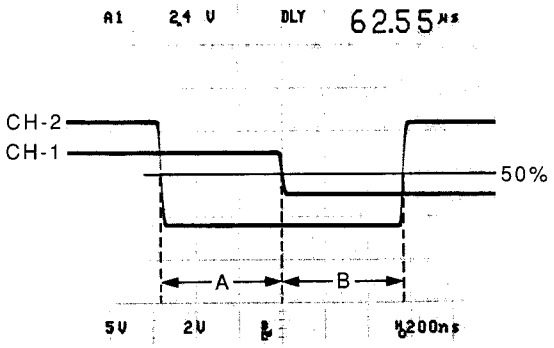 A = B	A BUS: W HD PHASE adjustment ⊘ RV131/AD-76 (B8) B BUS: W HD PHASE adjustment ⊘ RV231/AD-76 (N12)

(3-4-4. W HD PHASE Adjustment)

FOR EK

Machine conditions for adjustment	Specifications	Adjusting Point
STEP-1 • Connection: Section 3-2-2 Connection • Extension board: Extend the AD-76 board with the EX-326 board. • Test signal: 75% Color Bars • Switch setting: S1/AD-76 (D1) = COMPONENT S3-2/SY-172 (L10) = OFF **NOTE:** Adjust A BUS and B BUS in the same way for each bus.		
STEP-2 • Digtal voltmeter	A BUS: TP163/AD-76 (A9) B BUS: TP263/AD-76 (M13) 2.8 V dc	A BUS: VFO BIAS adjustment ⊘ LV101/AD-76 (B10) B BUS: VFO BIAS adjustment ⊘ LV201/AD-76 (N13)
STEP-3 • Oscilloscope MODE: DELAY CH-1 : 5 V/DIV 10 µS/DIV CH-2 : 2 V/DIV 200 mS/DIV TRIG : CH-1	A BUS CH-1: TP156/AD-76 (A7) CH-2: TP158/AD-76 (A8) B BUS CH-1: TP256/AD-76 (M10) CH-2: TP258/AD-76 (M11) 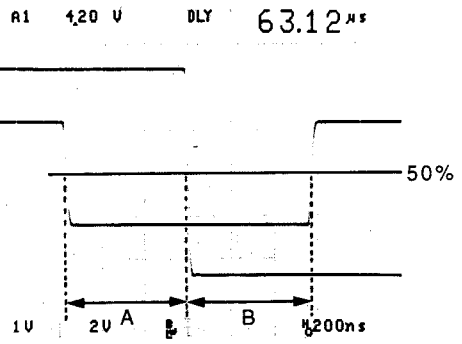 A = B	A BUS: W HD PHASE adjustment ⊘ RV131/AD-76 (B8) B BUS: W HD PHASE adjustment ⊘ RV231/AD-76 (N12)

3-4-5. COMPONENT Y/C DELAY Adjustment

NOTE: Perform this adjustment after completing all the adjustments for the DA-63 board.

<table>
<tr><th>Machine conditions for adjustment</th><th>Specifications</th><th>Adjusting Point</th></tr>
<tr><td colspan="3">STEP-1
• Connection: Section 3-2-2 Connection
• Extension board: Extend the AD-76 board with the EX-326 board.
• Test signal: BOWTIE
• Switch setting: S1/AD-76 (D1) = COMPONENT
S3-2/SY-172 (L10) = ON (For UC)
S3-2/SY-172 (L10) = OFF (For EK)
• Control panel setting:
1. PATTERN NUMBER = 4 (REVERSE = OFF)
2. FADER LEVER = Move it fully to the top and bottom several times and set it at the top.
3. BACKGROUND BUS = 1, FOREGROUND BUS = 2
After completing the above settings, check that the Y signal has been output.
Test points When adjusting A BUS: TP141/AD-76 (D13)
When adjusting B BUS: TP241/AD-76 (J12)
When the waveform is not displayed
Press the AUTO TRANS button and check that the Y signal has been output at the test point of the adjusted bus.
4. FOREGROUND BUS = 1
5. The signal of A BUS is output at the top of the fader lever.
The signal of B BUS is output at the bottom of the fader lever.
Adjustment can be performed for each bus.

NOTE: Adjust A BUS and B BUS in the same way for each bus.</td></tr>
<tr><td>STEP-2

• Waveform monitor
MEASURE : BOWTIE
INPUT : CH-B1
(COMPONENT Y)
CH-B2
(COMPONENT R-Y)
CH-B3
(COMPONENT B-Y)
MODE : WFM
REF : EXT</td><td>CH-B1: PGM OUT (COMPONENT Y)
CH-B2: PGM OUT (COMPONENT R-Y)
CH-B3: PGM OUT (COMPONENT B-Y)

 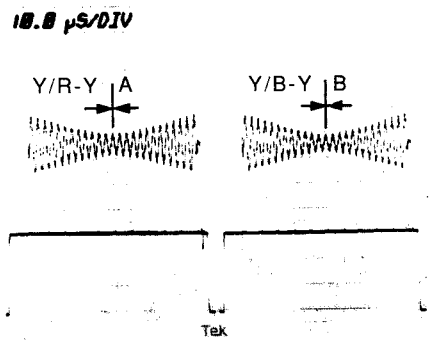

A = 0 ± 10 nS

• Set the each BOWTIE DIP point A and B on the center marker.</td><td>Y/R-Y DELAY
A BUS: CPNT V DL adjustment
FL114/AD-76 (C10)
Adjusting point:

B BUS: CPNT V DL adjustment
FL214/AD-76 (L10)
Adjusting point:

NOTE: Do not touch adjusting points other than the above.</td></tr>
</table>

(3-4-5. COMPONENT Y/C DELAY Adjustment)

Machine conditions for adjustment	Specifications	Adjusting Point
STEP-3 • Waveform monitor MEASURE: BOWTIE INPUT : CH-B1 (COMPONENT Y) CH-B2 (COMPONENT R-Y) CH-B3 (COMPONENT B-Y) MODE : WFM REF : EXT	CH-B1:PGM OUT (COMPONENT Y) CH-B2:PGM OUT (COMPONENT R-Y) CH-B3:PGM OUT (COMPONENT B-Y) 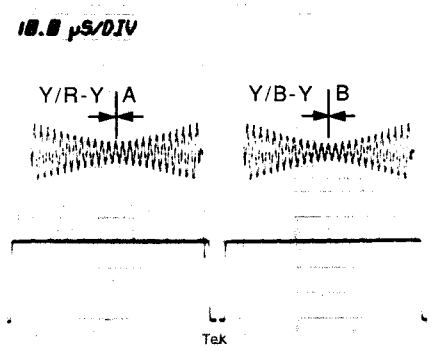 B = 0 ± 10 nS • Set the each BOWTIE DIP point A and B on the center marker.	Y/B-Y DELAY A BUS: CPNT U DL adjustment FL115/AD-76 (B10) Adjusting point: B BUS: CPNT U DL adjustment FL215/AD-76 (K10) Adjusting point: **NOTE:** Do not touch adjusting points other than the above.

3-4-6. Y/C Input Y LEVEL Adjustment

FOR UC

NOTE: Perform this adjustment after completing all the adjustments for the DA-63 board.

Machine conditions for adjustment	Specifications	Adjusting Point
STEP-1 • Connection: Section 3-2-2 Connection • Extension board: Extend the AD-76 board with the EX-326 board. • Test signal: 75% Color Bars (100/7.5/77/7.5 Color Bars) • Switch setting: S1/AD-76 (D1) = Y/C S3-2/SY-172 (L10) = ON • Control panel setting: 1. PATTERN NUMBER = 4 (REVERSE = OFF) 2. FADER LEVER = Move it fully to the top and bottom several times and set it at the top. 3. BACKGROUND BUS = 1, FOREGROUND BUS = 2 After completing the above settings, check that the Y signal has been output. Test points When adjusting A BUS: TP141/AD-76 (D13) When adjusting B BUS: TP241/AD-76 (J12) When the waveform is not displayed Press the AUTO TRANS button and check that the Y signal has been output at the test point of the adjusted bus. 4. FOREGROUND BUS = INT VIDEO (COL BAR) **NOTE:** Adjust A BUS and B BUS in the same way for each bus.		

(3-4-6. Y/C Input Y LEVEL Adjustment)

OR UC

Machine conditions for adjustment	Specifications	Adjusting Point
STEP-2 • Position of the fader lever: Position at which 100% WHITE can be compared. 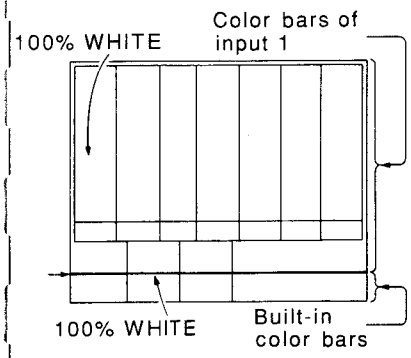 • Waveform monitor INPUT: CH-A MODE: WFM REF : EXT	PGM OUT (Y/C Y or COMPONENT) NG 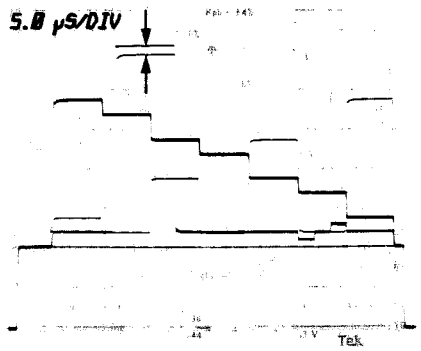 OK 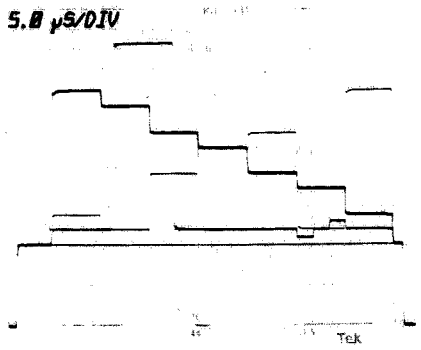 • Adjust so that there is no difference between the color bars of input 1 and the built-in color bars.	A BUS: SEP Y GAIN adjustment ⊘ RV111/AD-76 (D8) B BUS: SEP Y GAIN adjustment ⊘ RV211/AD-76 (J8)

(3-4-6. Y/C Input Y LEVEL Adjustment)

FOR EK

NOTE: Perform this adjustment after completing all the adjustments for the DA-63 board.

Machine conditions for adjustment	Specifications	Adjusting Point

STEP-1

- Connection: Section 3-2-2 Connection
- Extension board: Extend the AD-76 board with the EX-326 board.
- Test signal: 75% Color Bars
- Switch setting: S1/AD-76 (D1) = Y/C
  S3-2/SY-172 (L10) = OFF
- Control panel setting:
  1. PATTERN NUMBER = 4 (REVERSE = OFF)
  2. FADER LEVER = Move it fully to the top and bottom several times and set it at the top.
  3. BACKGROUND BUS = 1, FOREGROUND BUS = 2
     After completing the above settings, check that the Y signal has been output.
     Test points When adjusting A BUS: TP141/AD-76 (D13)
     When adjusting B BUS: TP241/AD-76 (J12)
     When the waveform is not displayed
     Press the AUTO TRANS button and check that the Y signal has been output at the test point of the adjusted bus.
  4. FOREGROUND BUS = INT VIDEO (COL BAR)

NOTE: Adjust A BUS and B BUS in the same way for each bus.

(3-4-6. Y/C Input Y LEVEL Adjustment)

OR EK

Machine conditions for adjustment	Specifications	Adjusting Point
STEP-2 • Position of the fader lever: Position at which 100% WHITE can be compared. 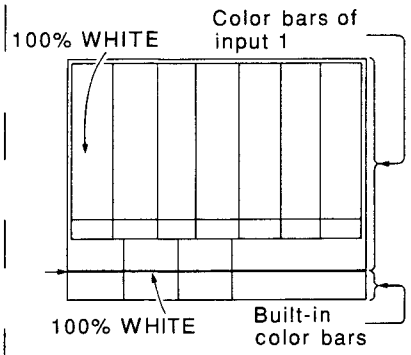 • Waveform monitor INPUT: CH-A MODE: WFM REF : EXT	PGM OUT (Y/C Y or COMPONENT) NG 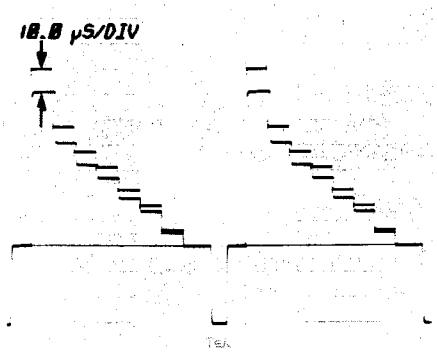 OK 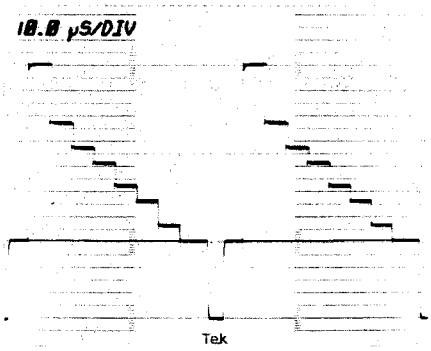 • Adjust so that there is no difference between the color bars of input 1 and the built-in color bars.	A BUS: SEP Y GAIN adjustment ⊘ RV111/AD-76 (D8) B BUS: SEP Y GAIN adjustment ⊘ RV211/AD-76 (J8)

3-4-7. CHROMA DECODER CLOCK FREQUENCY Adjustment

FOR UC

<table>
<tr><th>Machine conditions for adjustment</th><th>Specifications</th><th>Adjusting Point</th></tr>
<tr><td colspan="3">STEP-1
• Connection: Section 3-2-2 Connection
• Extension board: Extend the AD-76 board with the EX-326 board.
• Test signal: 75% Color Bars (100/7.5/77/7.5 Color Bars)
• Switch setting: S1/AD-76 (D1) = Y/C
S3-2/SY-172 (L10) = ON
• Control panel setting:
1. PATTERN NUMBER = 4 (REVERSE = OFF)
2. FADER LEVER = Move it fully to the top and bottom several times and set it at the top.
3. BACKGROUND BUS = 1, FOREGROUND BUS = 1

NOTE: Adjust A BUS and B BUS in the same way for each bus.</td></tr>
<tr><td>STEP-2

• Oscilloscope
CH-1: 20 mV/DIV
20 µS/DIV
TRIG: B.B (CH-4)</td><td>A BUS: TP123/AD-76 (D8)
B BUS: TP223/AD-76 (L8)

NG
 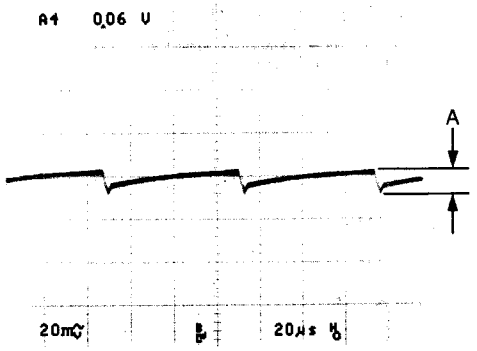

OK
 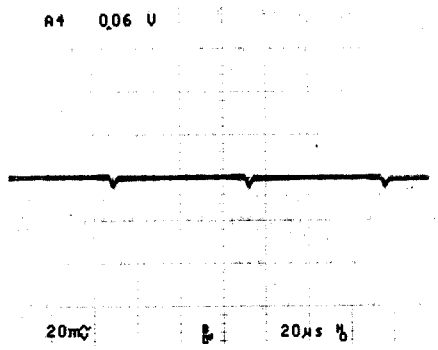

A = Minimum</td><td>A BUS: COLOR F LOCK adjustment
◐ CV101/AD-76 (C7)

B BUS: COLOR F LOCK adjustment
◐ CV201/AD-76 (L7)</td></tr>
</table>

3-4-7. CHROMA DECODER CLOCK FREQUENCY Adjustment)

FOR EK

Machine conditions for adjustment	Specifications	Adjusting Point
STEP-1 • Connection: Section 3-2-2 Connection • Extension board: Extend the AD-76 board with the EX-326 board. • Test signal: 75% Color Bars • Switch setting: S1/AD-76 (D1) = Y/C S3-2/SY-172 (L10) = OFF • Control panel setting: 1. PATTERN NUMBER = 4 (REVERSE = OFF) 2. FADER LEVER = Move it fully to the top and bottom several times and set it at the top. 3. BACKGROUND BUS = 1, FOREGROUND BUS = 1 **NOTE:** Adjust A BUS and B BUS in the same way for each bus.		
STEP-2 • Oscilloscope CH-1: 20 mV/DIV 500 µS/DIV TRIG: B.B (CH-4)	A BUS: TP123/AD-76 (D8) B BUS: TP223/AD-76 (L8) NG 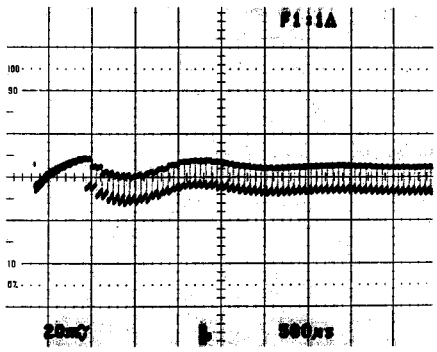 OK 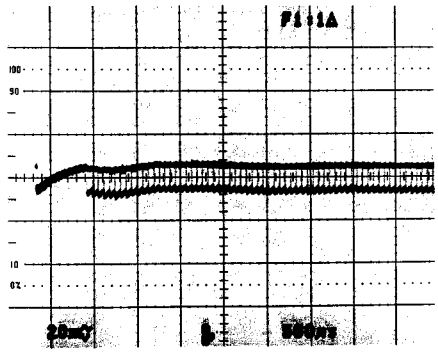 • Adjust so that wavefome becomes flat as possible.	A BUS: COLOR F LOCK adjustment ● CV101/AD-76 (C7) B BUS: COLOR F LOCK adjustment ● CV201/AD-76 (L7)

3-4-8. Y/C CHROMA LEVEL Adjustment

FOR UC

NOTE: Perform this adjustment after completing all the adjustments for the DA-63 board.

Machine conditions for adjustment	Specifications	Adjusting Point

STEP-1

- Connection: Section 3-2-2 Connection
- Extension board: Extend the AD-76 board with the EX-326 board.
- Test signal: Y/C (S), 75% Color Bars (100/7.5/77/7.5 Color Bars)
- Switch setting: S1/AD-76 (D1) = Y/C
  S3-2/SY-172 (L10) = ON
- Control panel setting:
  1. PATTERN NUMBER = 4 (REVERSE = OFF)
  2. FADER LEVER = Move it fully to the top and bottom several times and set it at the top.
  3. BACKGROUND BUS = 1, FOREGROUND BUS = 2
     After completing the above settings, check that the Y signal has been output.
     Test points When adjusting A BUS: TP141/AD-76 (D13)
     When adjusting B BUS: TP241/AD-76 (J12)
     When the waveform is not displayed
     Press the AUTO TRANS button and check that the Y signal has been output at the test point of the adjusted bus.
  4. FOREGROUND BUS = INT VIDEO (COL BAR)
  5. The signal of A BUS is output at the top of the fader lever.
     The signal of B BUS is output at the bottom of the fader lever.
     Adjustment can be performed for each bus.

NOTE: Adjust A BUS and B BUS in the same way for each bus.

(3-4-8. Y/C CHROMA LEVEL Adjustment)

ɔR UC

Machine conditions for adjustment	Specifications	Adjusting Point
ɜTEP-2 › Adjust to mechanical center. A BUS: RV114 B BUS: RV214 › Adjust the phase of the chroma. A BUS: RV113 B BUS: RV213 › Adjust in the vertical direction. A BUS: RV112 B BUS: RV212 • Adjust in the horizontal direction. A BUS: RV115 B BUS: RV215	PGM OUT (Y/C C or COMPOSITE) NG OK 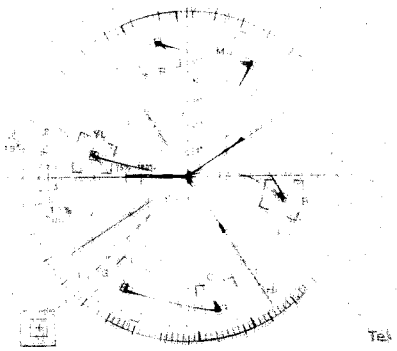	A BUS: SEP C GAIN adjustment ⊘ RV112/AD-76 (C7) CPST & SEP HUE SET adjustment ⊘ RV113/AD-76 (C7) SEP B-Y GAIN adjustment ⊘ RV115/AD-76 (B10) B BUS: SEP C GAIN adjustment ⊘ RV212/AF-76 (L10) CPST & SEP HUE SET adjustment ⊘ RV213/AD-76 (L7) SEP B-Y GAIN adjustment ⊘ RV215/AD-76 (K10)
› Vectorscope L.DISP : VECT INPUT : CH-A FILTER: FLAT REF : EXT	All luminance points should be inside the respective "田" mark on the vectorscope. • Adjust so that both the phase and the level A BUS and B BUS of become equal.	

(3-4-8. Y/C CHROMA LEVEL Adjustment)

FOR EK

NOTE: Perform this adjustment after completing all the adjustments for the DA-63 board.

Machine conditions for adjustment	Specifications	Adjusting Point
STEP-1 • Connection: Section 3-2-2 Connection • Extension board: Extend the AD-76 board with the EX-326 board. • Test signal: Y/C (S), 75% Color Bars • Switch setting: S1/AD-76 (D1) = Y/C S3-2/SY-172 (L10) = OFF • Control panel setting: 1. PATTERN NUMBER = 4 (REVERSE = OFF) 2. FADER LEVER = Move it fully to the top and bottom several times and set it at the top. 3. BACKGROUND BUS = 1, FOREGROUND BUS = 2 After completing the above settings, check that the Y signal has been output. Test points When adjusting A BUS: TP141/AD-76 (D13) When adjusting B BUS: TP241/AD-76 (J12) When the waveform is not displayed Press the AUTO TRANS button and check that the Y signal has been output at the test point of the adjusted bus. **NOTE:** Adjust A BUS and B BUS in the same way for each bus.		

(3-4-8. Y/C CHROMA LEVEL Adjustment)

OR EK

Machine conditions for adjustment	Specifications	Adjusting Point
STEP-2 • Adjust to mechanical center. A BUS: RV114 B BUS: RV214 • Adjust the phase of the chroma. A BUS: RV113 B BUS: RV213 • Adjust in the vertical direction. A BUS: RV112 B BUS: RV212 • Adjust in the horizontal direction. A BUS: RV115 B BUS: RV215	PGM OUT (Y/C C or COMPOSITE) NG 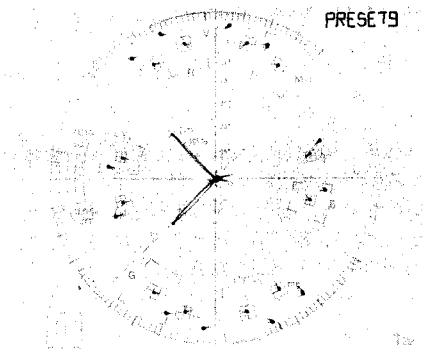 OK 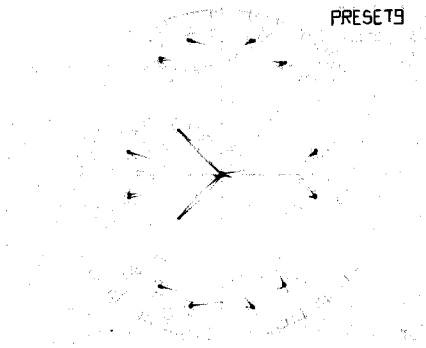 	A BUS: SEP C GAIN adjustment ⊘ RV112/AD-76 (C7) CPST & SEP HUE SET adjustment ⊘ RV113/AD-76 (C7) SEP B-Y GAIN adjustment ⊘ RV115/AD-76 (B10) B BUS: SEP C GAIN adjustment ⊘ RV212/AF-76 (L10) CPST & SEP HUE SET adjustment ⊘ RV213/AD-76 (L7) SEP B-Y GAIN adjustment ⊘ RV215/AD-76 (K10)
• Vectorscope L.DISP : VECT INPUT : CH-A FILTER: FLAT REF : EXT	All luminance points should be inside the respective "田" mark on the Vectorscope. • Adjust so that both the phase and the level of A BUS and B BUS become equal.	

3-4-9. Y/C INPUT Y/C DELAY Adjustment

FOR UC

NOTE: Perform this adjustment after completing all the adjustments for the DA-63 board.

Machine conditions for adjustment	Specification	Adjusting Point
STEP-1 • Connection: Section 3-2-2 Connection • Extension board: Extend the AD-76 board with the EX-326 board. • Test signal: 75% Color Bars (100/7.5/77/7.5 Color Bars) • Switch setting: S1/AD-76 (D1) = Y/C S3-2/SY-172 (L10) = ON • Control panel setting: 1. PATTERN NUMBER = 4 (REVERSE = OFF) 2. FADER LEVER = Move it fully to the top and bottom several times and set it at the top. 3. BACKGROUND BUS = 1, FOREGROUND BUS = 2 After completing the above settings, check that the Y signal has been output. Test points When adjusting A BUS: TP141/AD-76 (D13) When adjusting B BUS: TP241/AD-76 (J12) When the waveform is not displayed Press the AUTO TRANS button. 4. FOREGROUND BUS = 1 5. The signal of A BUS is output at the top of the fader lever. The signal of B BUS is output at the buttom of the fader lever. Adjustment can be performed for each bus. **NOTE:** Adjust A BUS and B BUS in the same way for each bus.		

(3-4-9. Y/C INPUT Y/C DELAY Adjustment)

ɔR UC

Machine conditions for adjustment	Specification	Adjusting Point
ɜTEP-2 › Observe the fourth gradation of the component color bars (line between green and magenta) by enlarging the time axis. • Waveform monitor INPUT: CH-B1 (COMPONENT Y) CH-B2 (COMPONENT R-Y) MODE: OVERLAY REF : EXT	CH-B1: PGM OUT (COMPONENT Y) CH-B2: PGM OUT (COMPONENT R-Y) 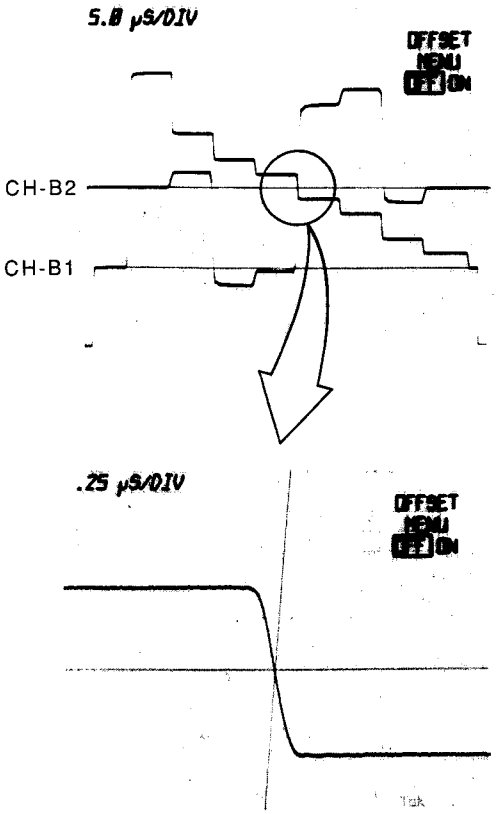 • Adjust so that the phases of the Y and R-Y signals have the same phase. (Adjust so that the line between green and magenta become equal.)	A BUS: Y/R-Y DL adjustment FL111/AD-76 (D9) Adjusting point: B BUS: Y/R-Y DL adjustment FL211/AD-76 (L9) Adjusting point: **NOTE:** Do not touch adjusting points other than the above.

(3-4-9. Y/C INPUT Y/C DELAY Adjustment)

FOR UC

Machine conditions for adjustment	Specifications	Adjusting Point
STEP-3 • Observe the fourth gradation of the component color bars (line between green and magenta) by enlarging the time axis. • Waveform monitor INPUT: CH-B1 (COMPONENT Y) CH-B3 (COMPONENT B-Y) MODE: OVERLAY REF : EXT	CH-B1: PGM OUT (COMPONENT Y) CH-B2: PGM OUT (COMPONENT B-Y) 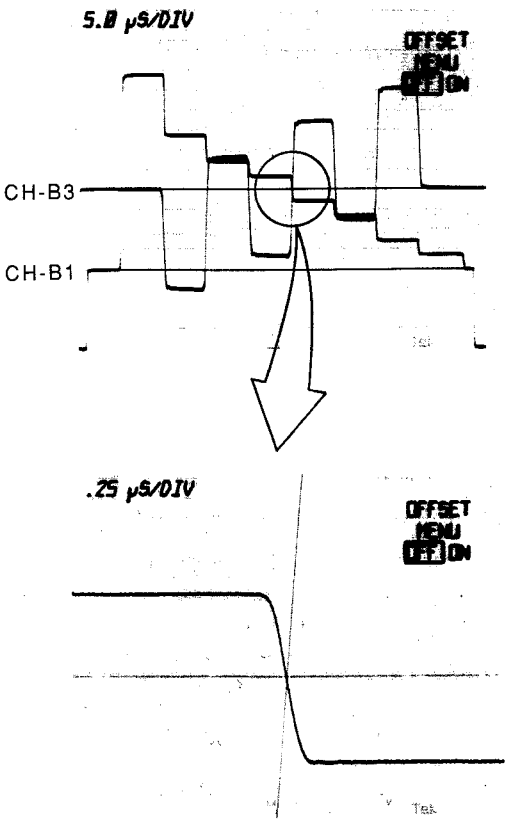 • Adjust so that the phases of the Y and B-Y signals have the same phase. (Adjust so that the line between green and magenta become equal.)	A BUS: Y/B-Y DL adjustment FL112/AD-76 (C9) Adjusting point: B BUS: Y/B-Y DL adjustment FL212/AD-76 (K9) Adjusting point: **NOTE:** Do not touch adjusting points other than the above.

3-4-9. Y/C INPUT Y/C DELAY Adjustment)

FOR EK

OTE: Perform this adjustment after completing all the adjustments for the DA-63 board.

Machine conditions for adjustment	Specifications	Adjusting Point
STEP-1 • Connection: Section 3-2-2 Connection • Extension board: Extend the AD-76 board with the EX-326 board. • Test signal: 75% Color Bars • Switch setting: S1/AD-76 (D1) = Y/C S3-2/SY-172 (L10) = OFF • Control panel setting: 1. PATTERN NUMBER = 4 (REVERSE = OFF) 2. FADER LEVER = Move it fully to the top and bottom several times and set it at the top. 3. BACKGROUND BUS = 1, FOREGROUND BUS = 2 After completing the above settings, check that the Y signal has been output. Test points When adjusting A BUS: TP141/AD-76 (D13) When adjusting B BUS: TP241/AD-76 (J12) When the waveform is not displayed Press the AUTO TRANS button. 4. FOREGROUND =1 5. The signal of A BUS is output at the top of the fader lever. The signal of B BUS is output at the bottom of the fader lever. Adjustment can be performed for each bus. **NOTE:** Adjust A BUS and B BUS in the same way for each bus.		

(3-4-9. Y/C INPUT Y/C DELAY Adjustment)

FOR EK

Machine conditions for adjustment	Specifications	Adjusting Point
STEP-2 • Observe the fourth gradation of the component color bars (line between green and magenta) by enlarging the time axis.	CH-B1: PGM OUT (COMPONENT Y) CH-B2: PGM OUT (COMPONENT R-Y)	A BUS: Y/R-Y DL adjustment FL111/AD-76 (D9) Adjusting point:
	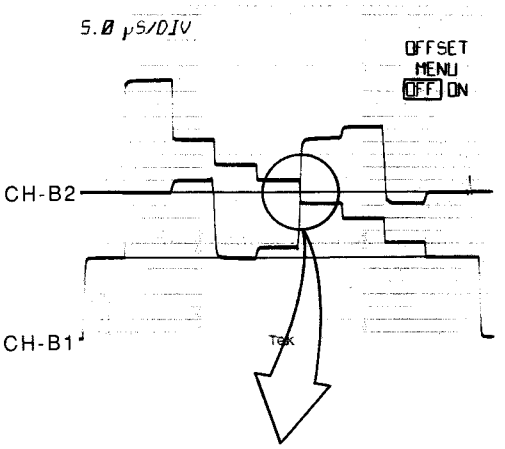	B BUS: Y/R-Y DL adjustment FL211/AD-76 (L9) Adjusting point:
	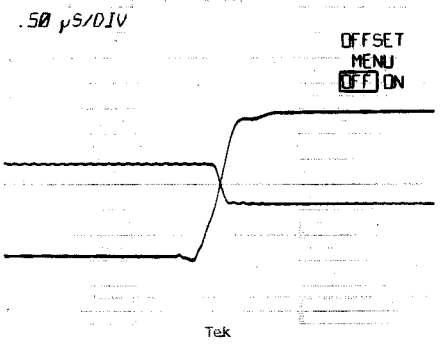	
• Waveform monitor INPUT: CH-B1 (COMPONENT Y) CH-B2 (COMPONENT R-Y) MODE: OVERLAY REF : EXT	• Adjust so that the phases of the Y and R-Y signals have the same phase. (Adjust so that the line between green and magenta become equal.)	**NOTE:** Do not touch adjusting points other than the above.

(3-4-9. Y/C INPUT Y/C DELAY Adjustment)

FOR EK

Machine conditions for adjustment	Specifications	Adjusting Point
STEP-3 • Observe the fourth gradation of the component color bars (line between green and magenta) by enlarging the time axis.	CH-B1: PGM OUT (COMPONENT Y) CH-B3: PGM OUT (COMPONENT B-Y) 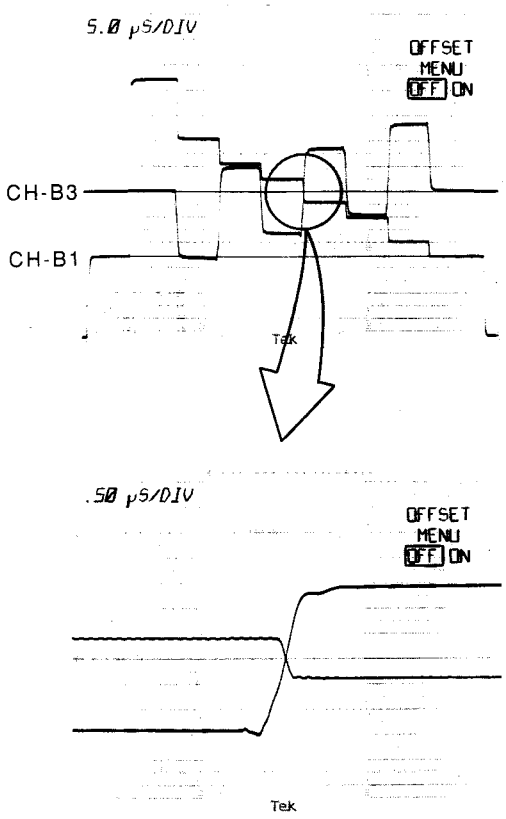	A BUS: Y/B-Y DL adjustment FL112/AD-76 (C9) Adjusting point:
		B BUS: Y/B-Y DL adjustment FL212/AD-76 (K9) Adjusting point:
• Waveform monitor INPUT: CH-B1 (COMPONENT Y) CH-B3 (COMPONENT B-Y) MODE: OVERLAY REF : EXT	• Adjust so that the phases of the Y and B-Y signals have the same phase. (Adjust so that the line between green and magenta become equal.)	**NOTE:** Do not touch adjusting points other than the above.

3-4-10. APC LOCK Adjustment

Machine conditions for adjustment	Specifications	Adjusting Point
STEP-1 • Connection: Section 3-2-2 Connection • Extension board: Extend the AD-76 board with the EX-326 board. • Test signal: 75% Color Bars • Switch setting: S1/AD-76 (D1) = COMPOSITE S3-2/SY-172 (L10) = ON (For UC) S3-2/SY-172 (L10) = OFF (For EK) • Control panel setting: 1. PATTERN NUMBER = 4 (REVERSE = OFF) 2. FADER LEVER = Move it fully to the top and bottom several times and set it at the top. 3. BACKGROUND BUS = 1, FOREGROUND BUS = 1 **NOTE:** Adjust A BUS and B BUS in the same way for each bus.		
STEP-2 • Digital voltmeter	A BUS: TP116/AD-76 (G4) B BUS: TP216/AD-76 (H4) 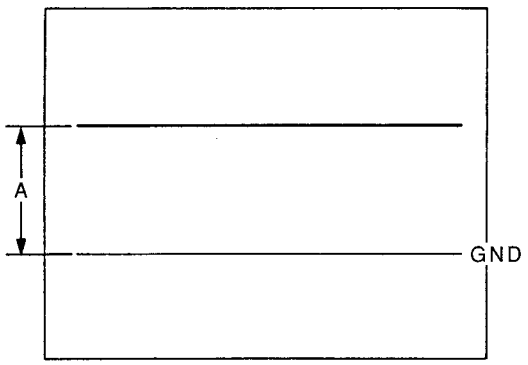 A = 3.5 to 4.5 V dc • Turn A BUS: ⊘RV103 or B BUS: ⊘RV203 in the clockwise direction fully and check that the specification above is satisfied.	A BUS: APC LOCK adjustment ⊘ RV103/AD-76 (F4) B BUS: APC LOCK adjustment ⊘ RV203/AD-76 (H4)

3-4-10. APC LOCK Adjustment)

Machine conditions for adjustment	Specifications	Adjusting Point
STEP-3 • Digital voltmeter	A BUS: TP116/AD-76 (G4) B BUS: TP216/AD-76 (H4) 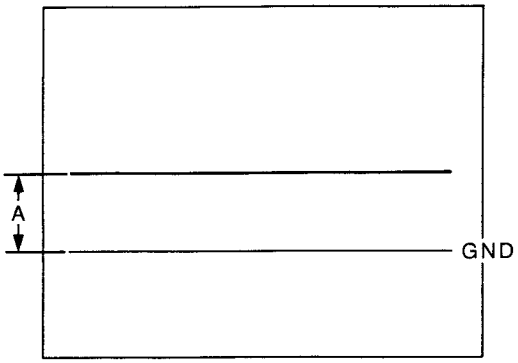 A = Approx. 2.2 V dc • Turn A BUS: ⊘RV103 or B BUS: ⊘RV203 in the counterclockwise direction fully until the level is drawn into the vicinity of 2.2 V. (color lock condition)	A BUS: APC LOCK adjustment ⊘ RV103/AD-76 (F4) B BUS: APC LOCK adjustment ⊘ RV203/AD-76 (H4)
STEP-4 • Disconnect the VIDEO IN BNC connector. • Digital voltmeter	A BUS: TP116/AD-76 (G4) B BUS: TP216/AD-76 (H4) • Check that the level becomes approximately 0 V, re-connect the BNC connector of VIDEO IN1 and check that the level becomes approximately 2.2 V dc again.	(Check)

3-4-11. COMPOSITE Y LEVEL Adjustment

FOR UC

<table>
<tr><th>Machine conditions for adjustment</th><th>Specifications</th><th>Adjusting Point</th></tr>
<tr><td colspan="3">STEP-1
• Connection: Section 3-2-2 Connection
• Extension board: Extend the AD-76 board with the EX-326 board.
• Test signal: 75% Color Bars (100/7.5/77/7.5 Color Bars)
• Switch setting: S1/AD-76 (D1) = COMPOSITE
S3-2/SY-172 (L10) = ON
• Control panel setting:
1. PATTERN NUMBER = 4 (REVERSE = OFF)
2. FADER LEVER = Move it fully to the top and bottom several times and set it at the top.
3. BACKGROUND BUS =1, FOREGROUND BUS = 2
After completing the above settings, check that the Y signal has been output.
Test points When adjusting A BUS: TP141/AD-76 (D13)
When adjusting B BUS: TP241/AD-76 (J12)
When the waveform is not displayed
Press the AUTO TRANS button and check that the Y signal has been output at the test point of the adjusted bus.
4. FOREGROUND BUS = INT VIDEO (COL BAR)

NOTE: Adjust A BUS and B BUS in the same way for each bus.</td></tr>
<tr><td>STEP-2
• Position of fader lever:
Position at which 100% WHITE can be compared.

 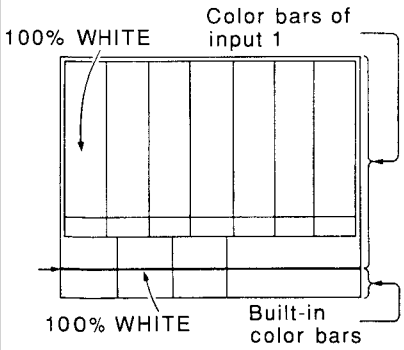

• Waveform monitor
INPUT: CH-A
MODE: WFM
REF : EXT</td><td>PGM OUT (COMPONENT Y or COMPOSITE)

• Adjust so that there is no difference between the color bars of input 1 and the built-in color bars.</td><td>A BUS: CPST Y GAIN adjustment
⊘ RV101/AD-76 (E2)

B BUS: CPST Y GAIN adjustment
⊘ RV201/AD-76 (J2)</td></tr>
</table>

(3-4-11. COMPOSITE Y LEVEL Adjustment)

FOR EK

Machine conditions for adjustment	Specifications	Adjusting Point

STEP-1

- Connection: Section 3-2-2 Connection
- Extension board: Extend the AD-76 board with the EX-326 board.
- Test signal: 75% Color Bars (100/7.5/77/7.5 Color Bars)
- Switch setting: S1/AD-76 (D1) = COMPOSITE
  S3-2/SY-172 (L10) = OFF
- Control panel setting:

1. PATTERN NUMBER = 4 (REVERSE = OFF)
2. FADER LEVER = Move it fully to the top and bottom several times and set it at the top.
3. BACKGROUND BUS = 1, FOREGROUND BUS = 2
   After completing the above settings, check that the Y signal has been output.
   Test points When adjusting A BUS: TP141/AD-76 (D13)
   When adjusting B BUS: TP241/AD-76 (J12)
   When the waveform is not displayed
   Press the AUTO TRANS button and check that the Y signal has been output at the test point of the adjusted bus.
4. FOREGROUND BUS = INT VIDEO (COL BAR)

NOTE: Adjust A BUS and B BUS in the same way for each bus.

(3-4-11. COMPOSITE Y LEVEL Adjustment)

FOR EK

Machine conditions for adjustment	Specifications	Adjusting Point
STEP-2 • Position of fader lever: Position at which 100% WHITE can be compared. 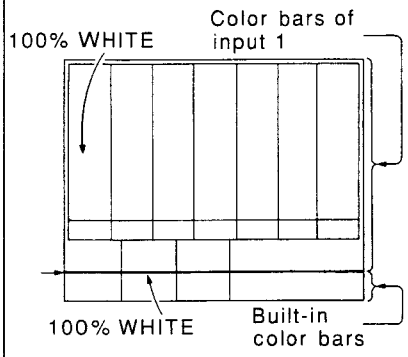 • Waveform monitor INPUT: CH-A MODE: WFM REF : EXT	PGM OUT (COMPONENT Y or COMPOSITE) NG 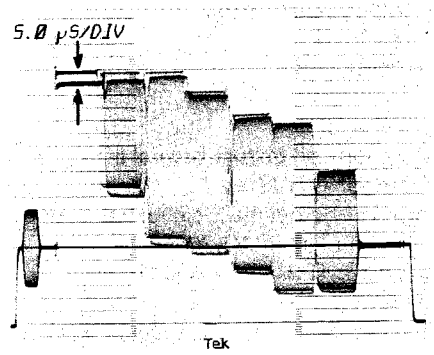 OK 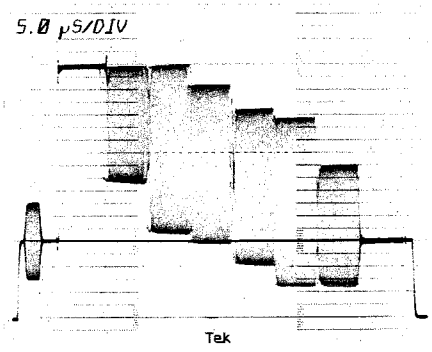 • Adjust so that there is no difference between the color bars of input 1 and the built-in color bars.	A BUS: CPST Y GAIN adjustment ⊘ RV101/AD-76 (E2) B BUS: CPST Y GAIN adjustment ⊘ RV201/AD-76 (J2)

3-4-12. COMPOSITE CHROMA LEVEL Adjustment

FOR UC

Machine conditions for adjustment	Specifications	Adjusting Point
STEP-1 • Connection: Section 3-2-2 Connection • Extension board: Extend the AD-76 board with the EX-326 board. • Test signal: 75% Color Bars (100/7.5/77/7.5 Color Bars) • Switch setting: S1/AD-76 (D1) = COMPOSITE S3-2/SY-172 (L10) = ON • Control panel setting: 1. PATTERN NUMBER = 4 (REVERSE = OFF) 2. FADER LEVER = Move it fully to the top and bottom several times and set it at the top. 3. BACKGROUND BUS = 1, FOREGROUND BUS = 1 **NOTE:** Adjust A BUS and B BUS in the same way for each bus.		
STEP-2 • Oscilloscope CH-1: 50 mV/DIV 10 µS/DIV TRIG: B.B (CH-4)	A BUS: TP122/AD-76 (B7) B BUS: TP222/AD-76 (K7) 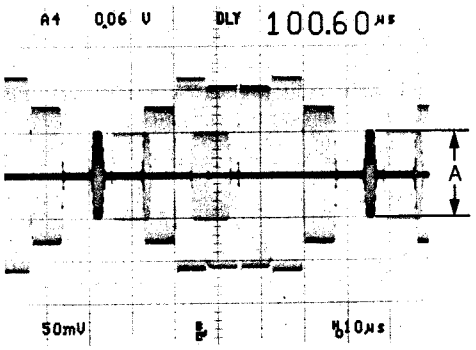 A = 100 ± 5 mV p-p (A: Burst amplitude)	A BUS: CPST C GAIN adjustment ⊘ RV102/AD-76 (E2) B BUS: CPST C GAIN adjustment ⊘ RV202/AD-76 (H2)

(3-4-12. COMPOSITE CHROMA LEVEL Adjustment)

FOR UC

Machine conditions for adjustment	Specifications	Adjusting Point
STEP-3 • Disconnect the VIDEO IN Connector. • Oscilloscope CH-1: 50 mV/DIV 10 µS/DIV TRIG: B.B (CH-4)	A BUS: TP122/AD-76 (B7) B BUS: TP222/AD-76 (K7) 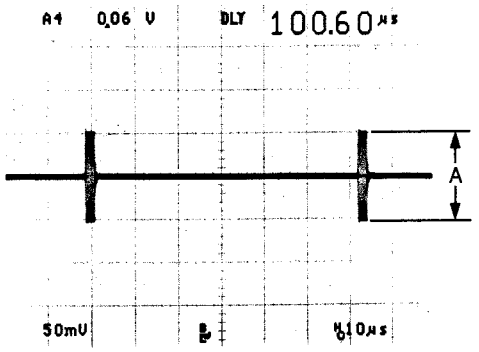 A = 100 ± 5 mV p-p • After adjusting to the above specification, connect the VIDEO IN connector.	A BUS: INT BURST LEVEL adjustment ⊘ RV116/AD-76 (C4) B BUS: INT BURST LEVEL adjustment ⊘ RV216/AD-76 (K4)

4-12. COMPOSITE CHROMA LEVEL Adjustment)

FOR EK

Machine conditions for adjustment	Specifications	Adjusting Point
STEP-1 Connection: Section 3-2-2 Connection Extension board: Extend the AD-76 board with the EX-326 board. • Test signal: 75% Color Bars • Switch setting: S1/AD-76 (D1) = COMPOSITE S3-2/SY-172 (L10) = OFF Control panel setting: 1. PATTERN NUMBER = 4 (REVERSE = OFF) 2. FADER LEVER = Move it fully to the top and bottom several times and set it at the top. 3. BACKGROUND BUS = 1, FOREGROUND BUS = 1 **NOTE:** Adjust A BUS and B BUS in the same way for each bus.		
STEP-2 • Oscilloscope CH-1: 50 mV/DIV 10 µS/DIV TRIG: B.B (CH-4)	A BUS: TP122/AD-76 (B7) B BUS: TP222/AD-76 (K7) 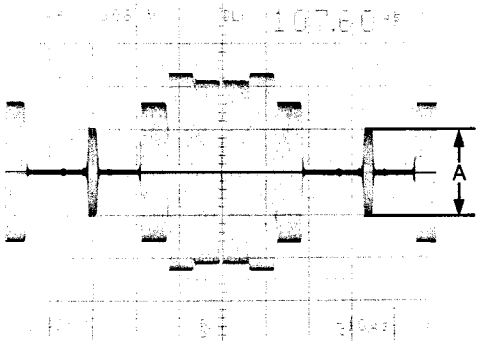 A = 100 ± 5 mV p-p (A: Burst amplitude)	A BUS: CPST C GAIN adjustment ⊘ RV102/AD-76 (E2) B BUS: CPST C GAIN adjustment ⊘ RV202/AD-76 (H2)

(3-4-12. COMPOSITE CHROMA LEVEL Adjustment)

FOR EK

Machine conditions for adjustment	Specifications	Adjusting Point
STEP-3 • Disconnect the VIDEO IN Connector. • Oscilloscope CH-1: 50 mV/DIV 10 μS/DIV TRIG: B.B (CH-4)	A BUS: TP122/AD-76 (B7) B BUS: TP222/AD-76 (K7) 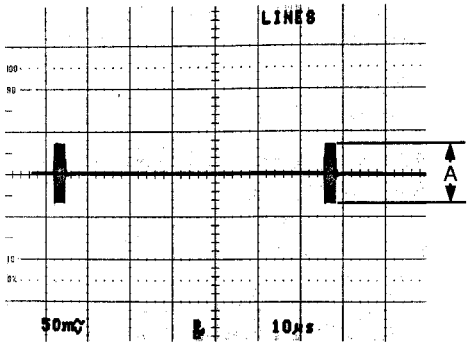 A = 70 ± 5 mV p-p • After adjusting to the above specification, connect the VIDEO IN connector.	A BUS: INT BURST LEVEL adjustment ⊘ RV116/AD-76 (C4) B BUS: INT BURST LEVEL adjustment ⊘ RV216/AD-76 (K4)

OVERALL

SECTION 4
BLOCK DIAGRAMS

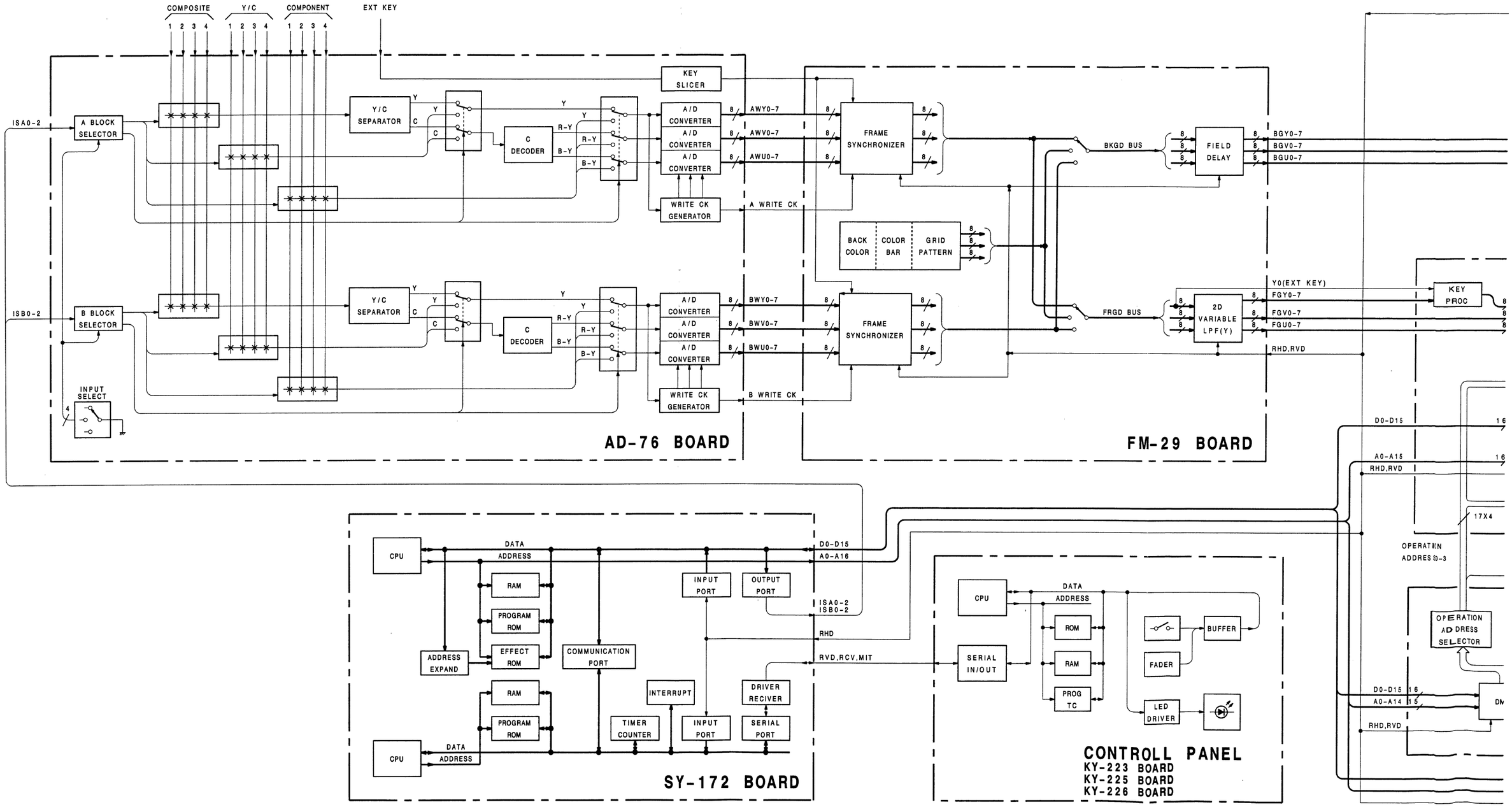

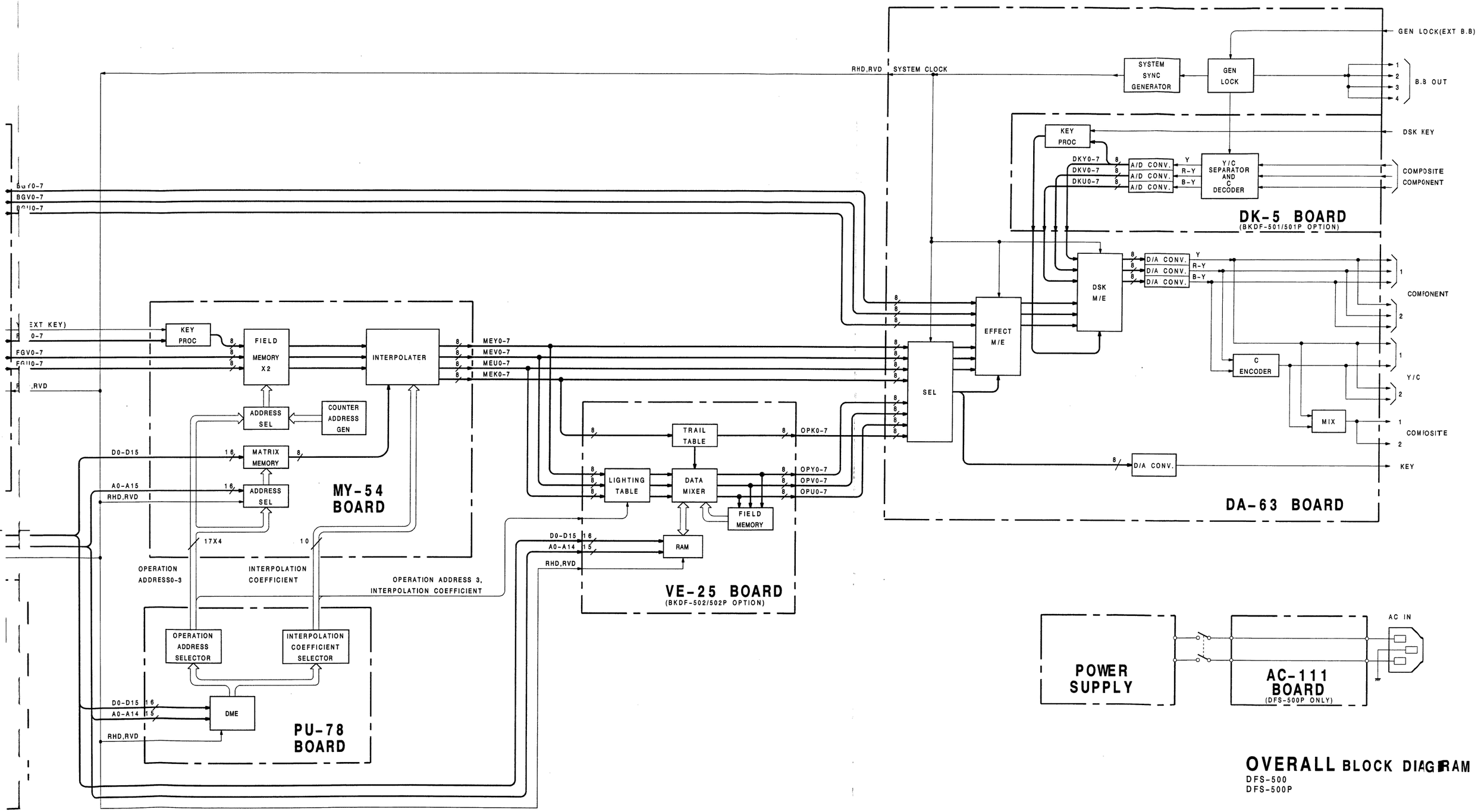

OVERALL BLOCK DIAGRAM

DFS-500
DFS-500P

AD-76;A/D Converter

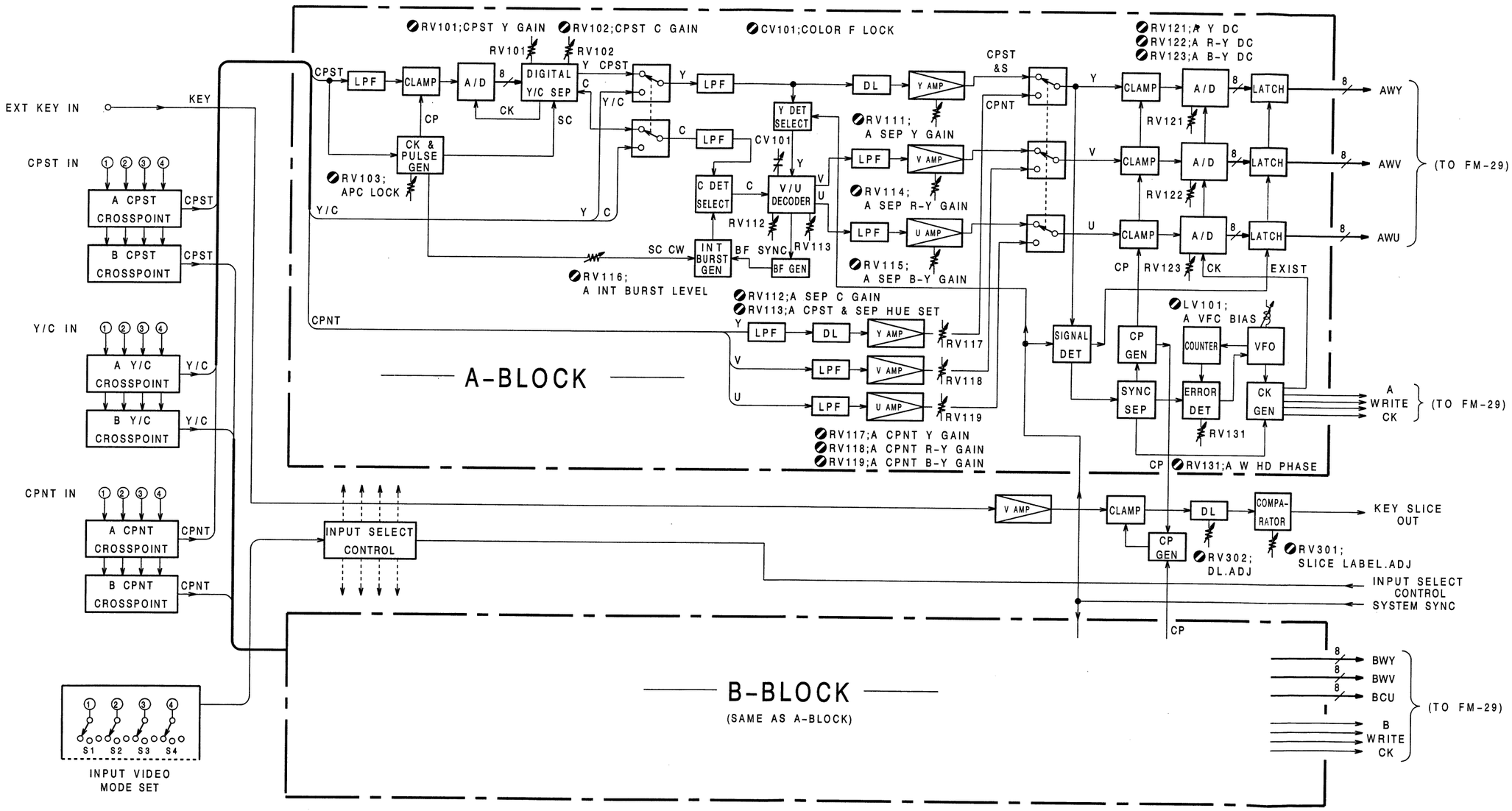

AD-76 BLOCK DIAGRAM
DFS-500
DFS-500P

(TO FM-29)

(TO FM-29)

SL
UT

J
T SELECT
ONTROL
EM SYNC

TO FM-29)

DIAGRAM

FM-29;Frame Synchronizer

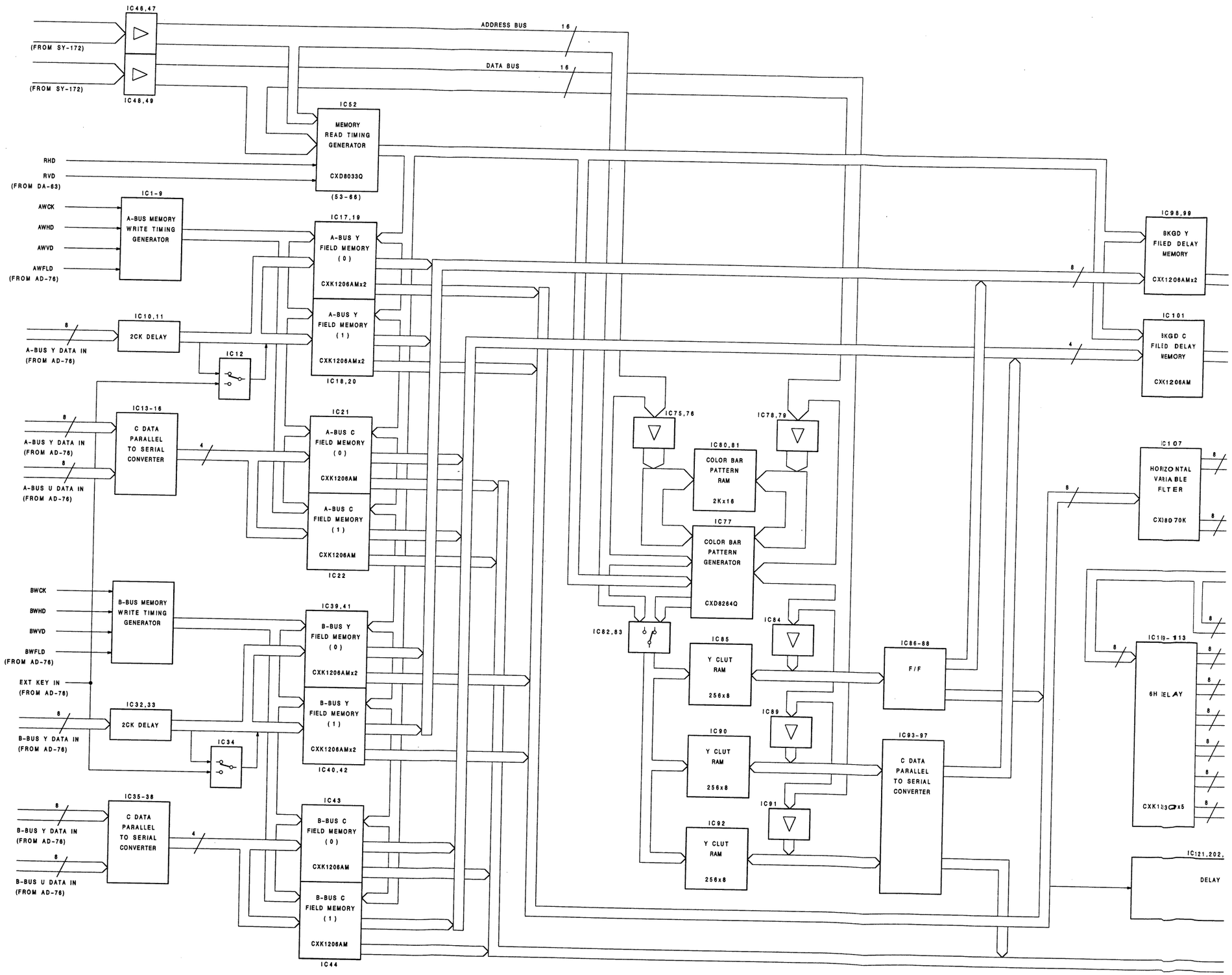

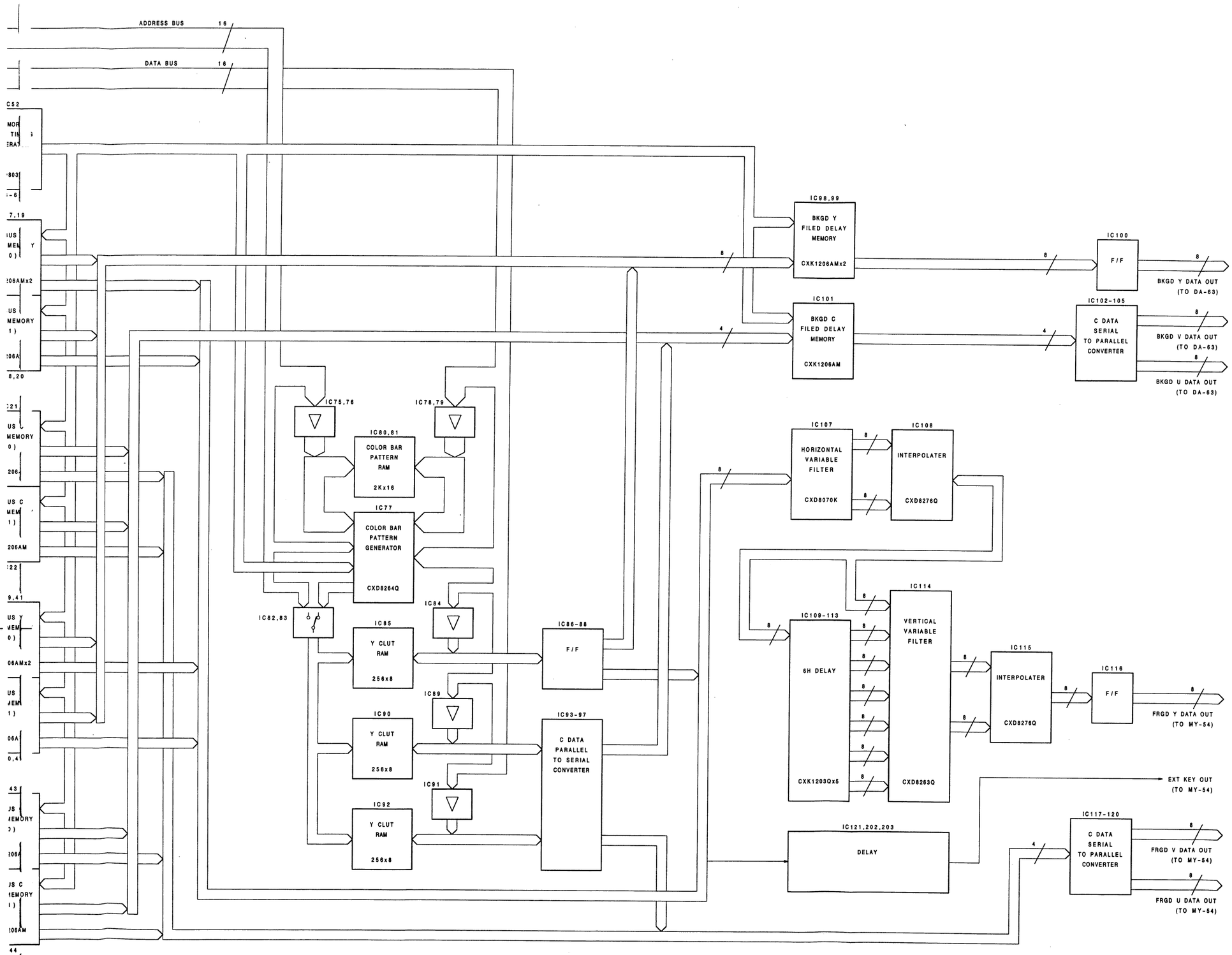

FM-29 BLOCK DIAGRAM
DFS-500
DFS-500P

MY-54;Field Memory

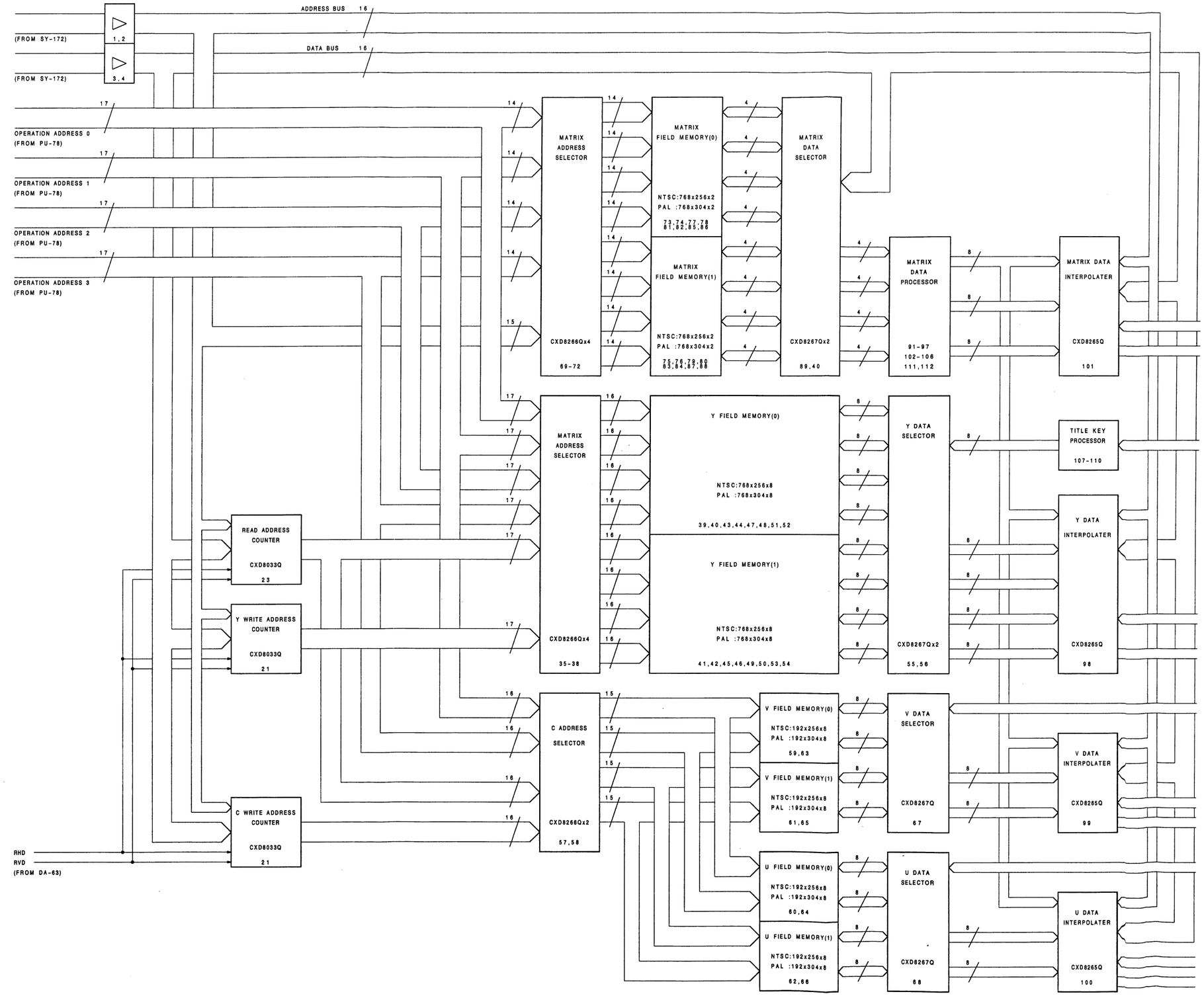

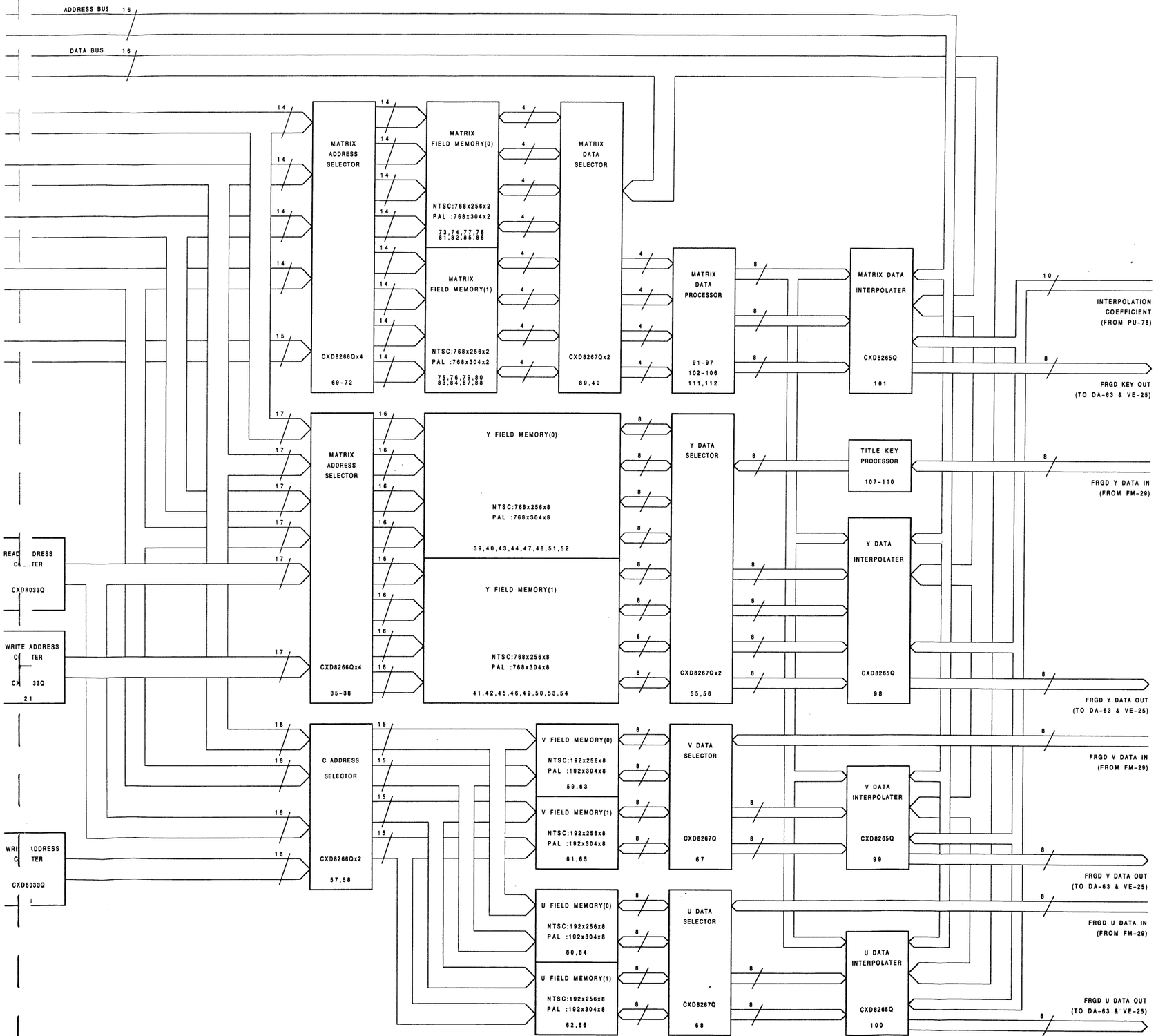

MY-54 BLOCK DIAGRAM
DFS-500
DFS-500P

PU-78;Address Operation

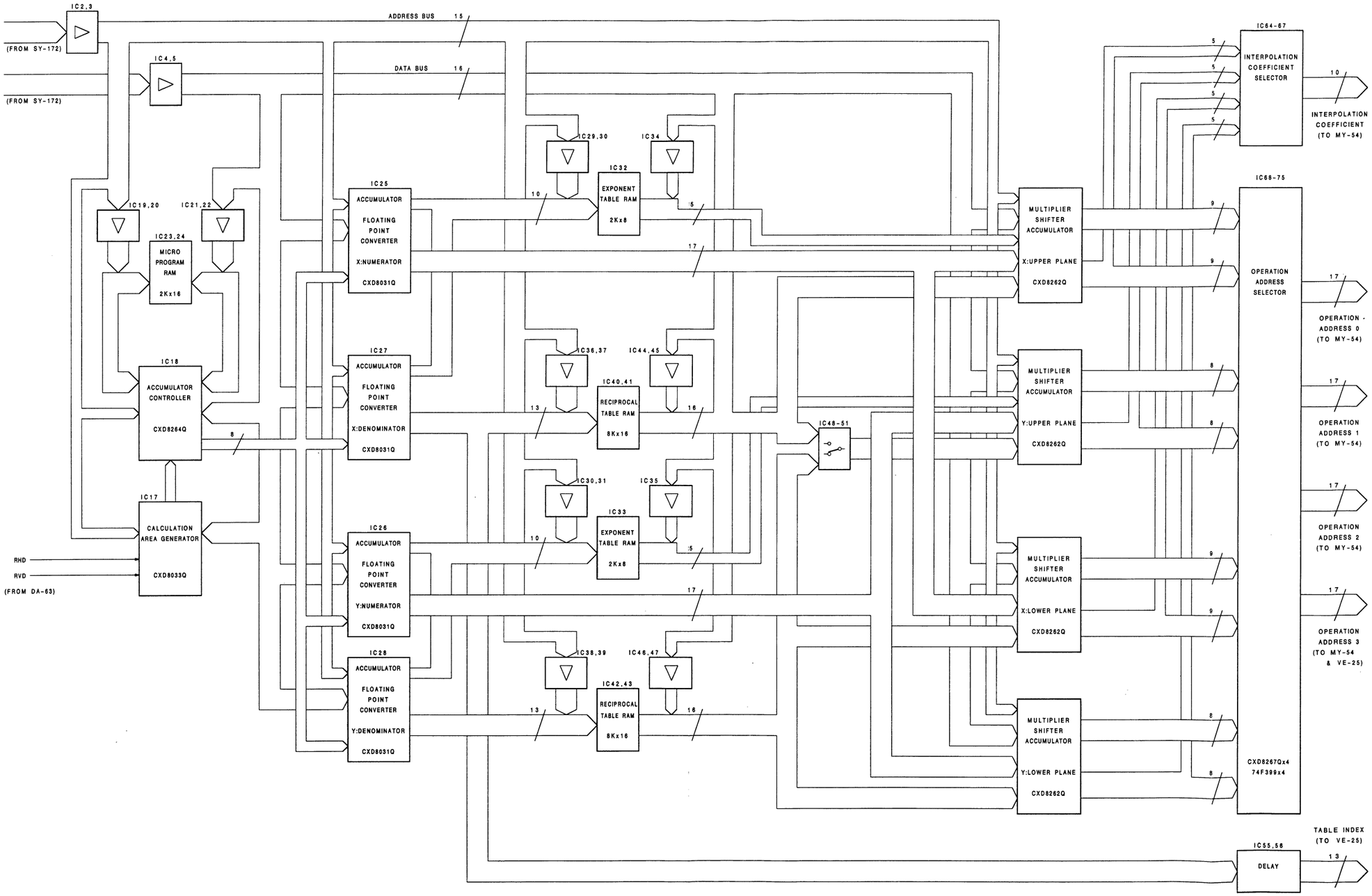

PU-78 BLOCK DIAGRAM
DFS-500
DFS-500P

4-5

DA-63;D/A Converter

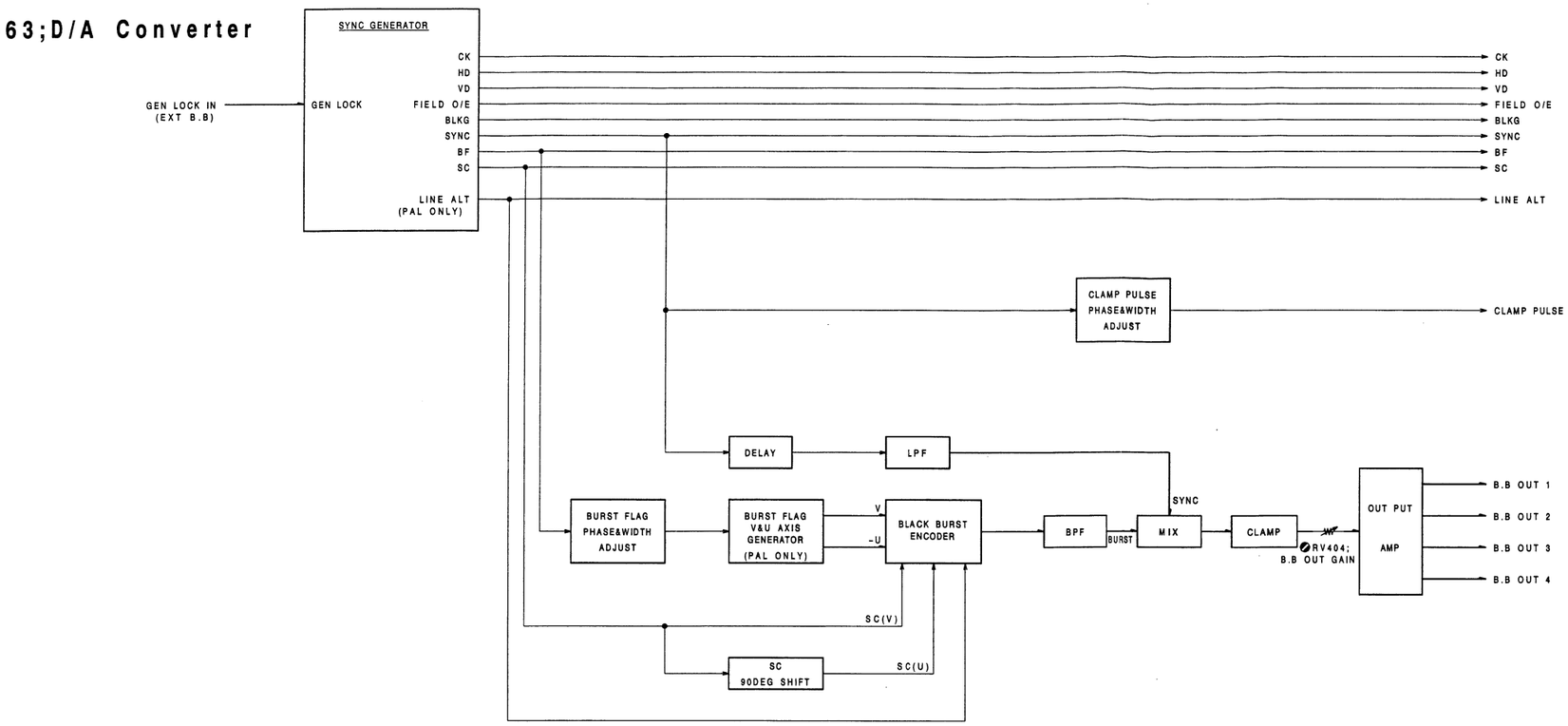

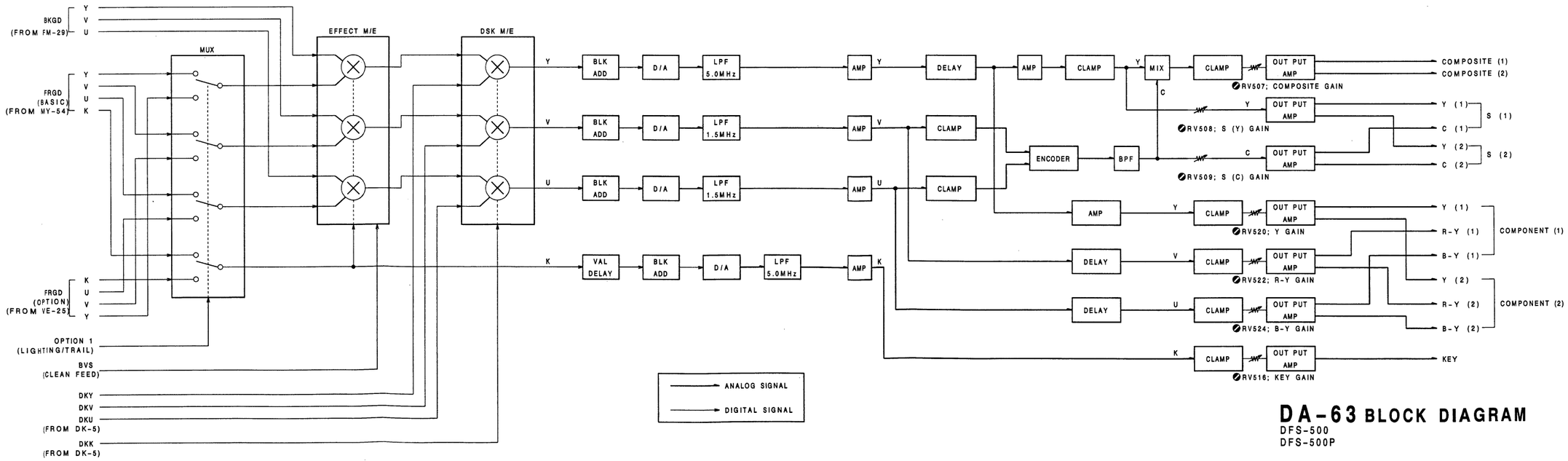

DA-63 BLOCK DIAGRAM

DFS-500
DFS-500P

4-6

SY-172;System Control

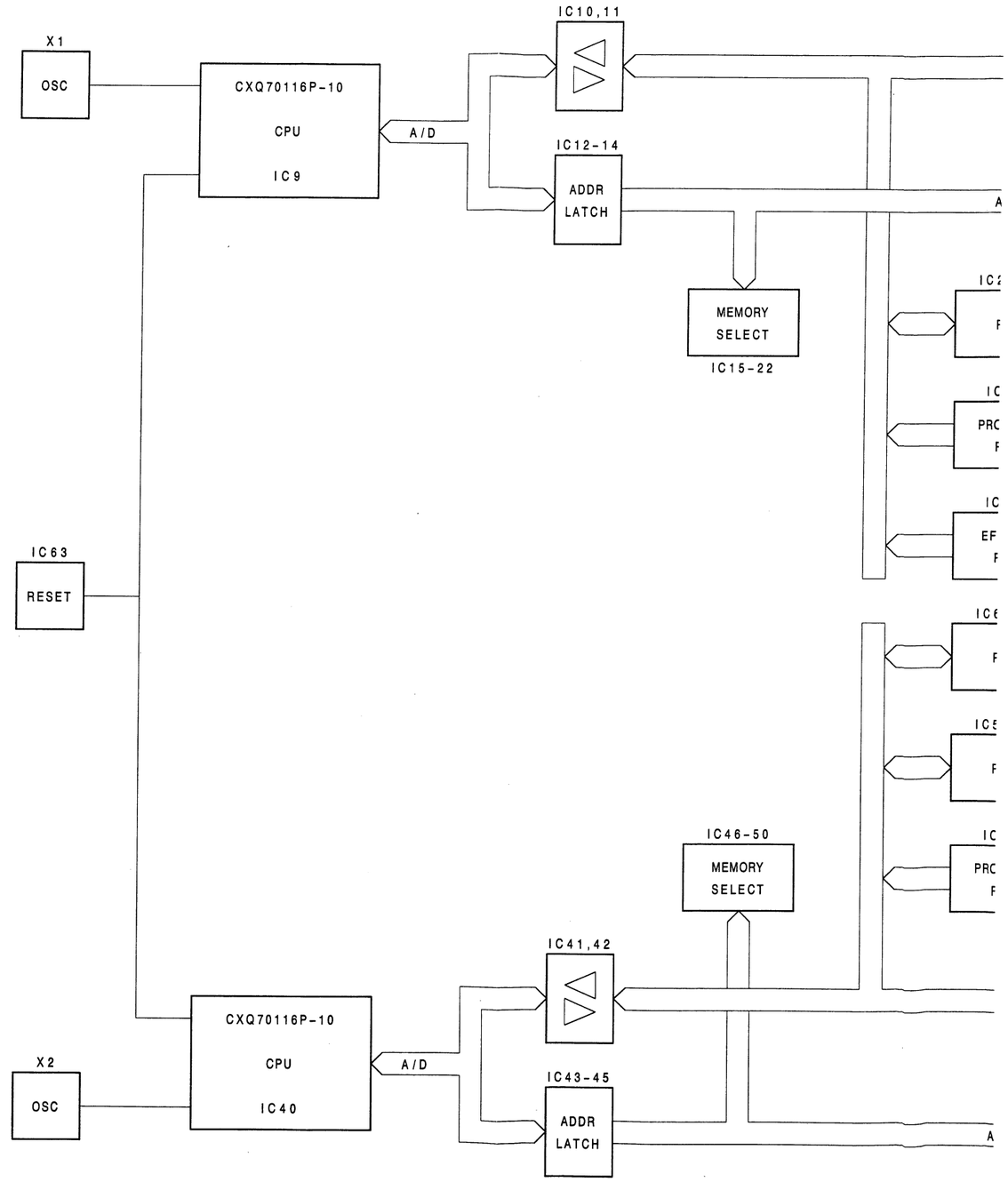

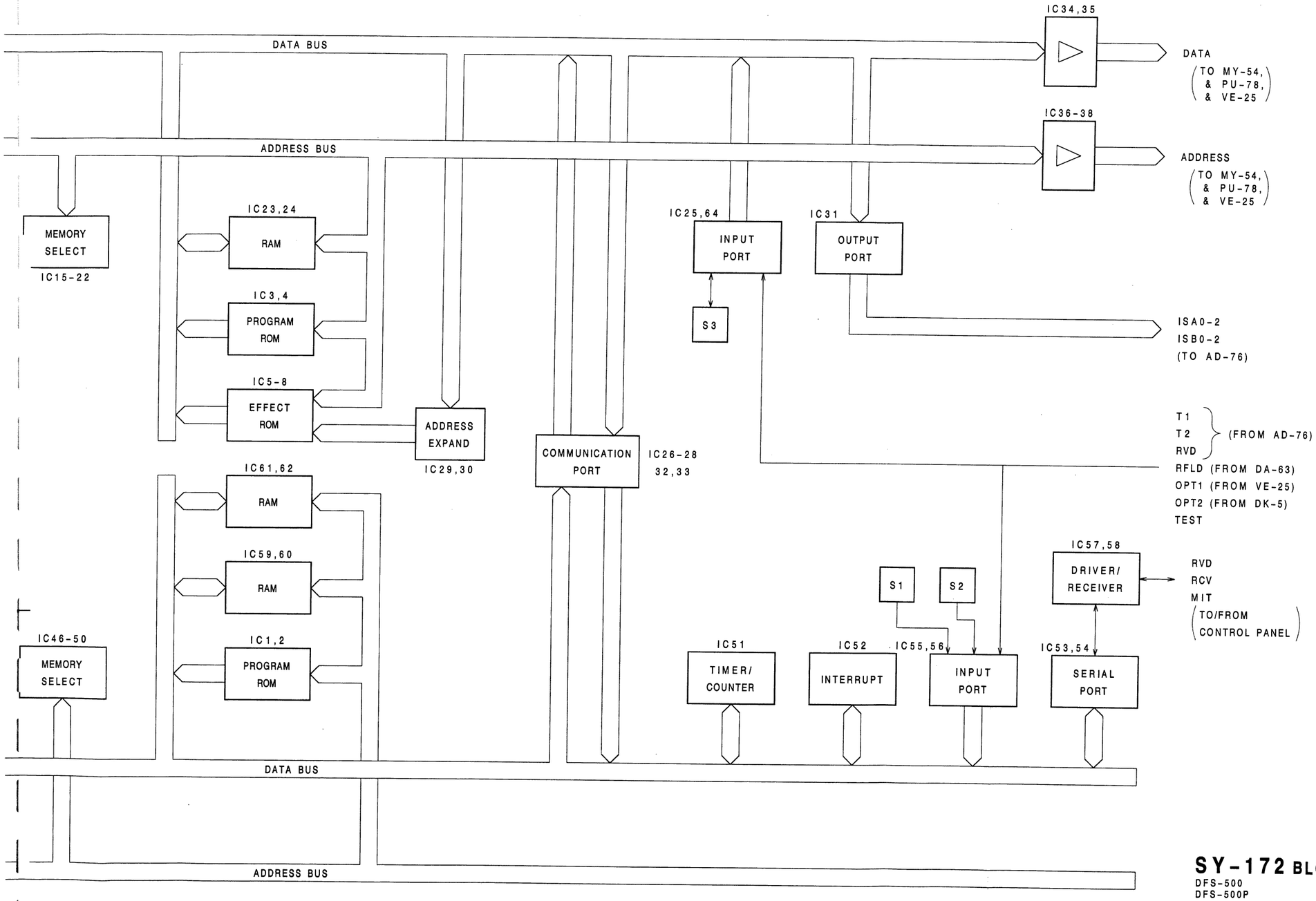

SY-172 BLOCK DIAGRAM

DFS-500
DFS-500P

CONTROL PANEL

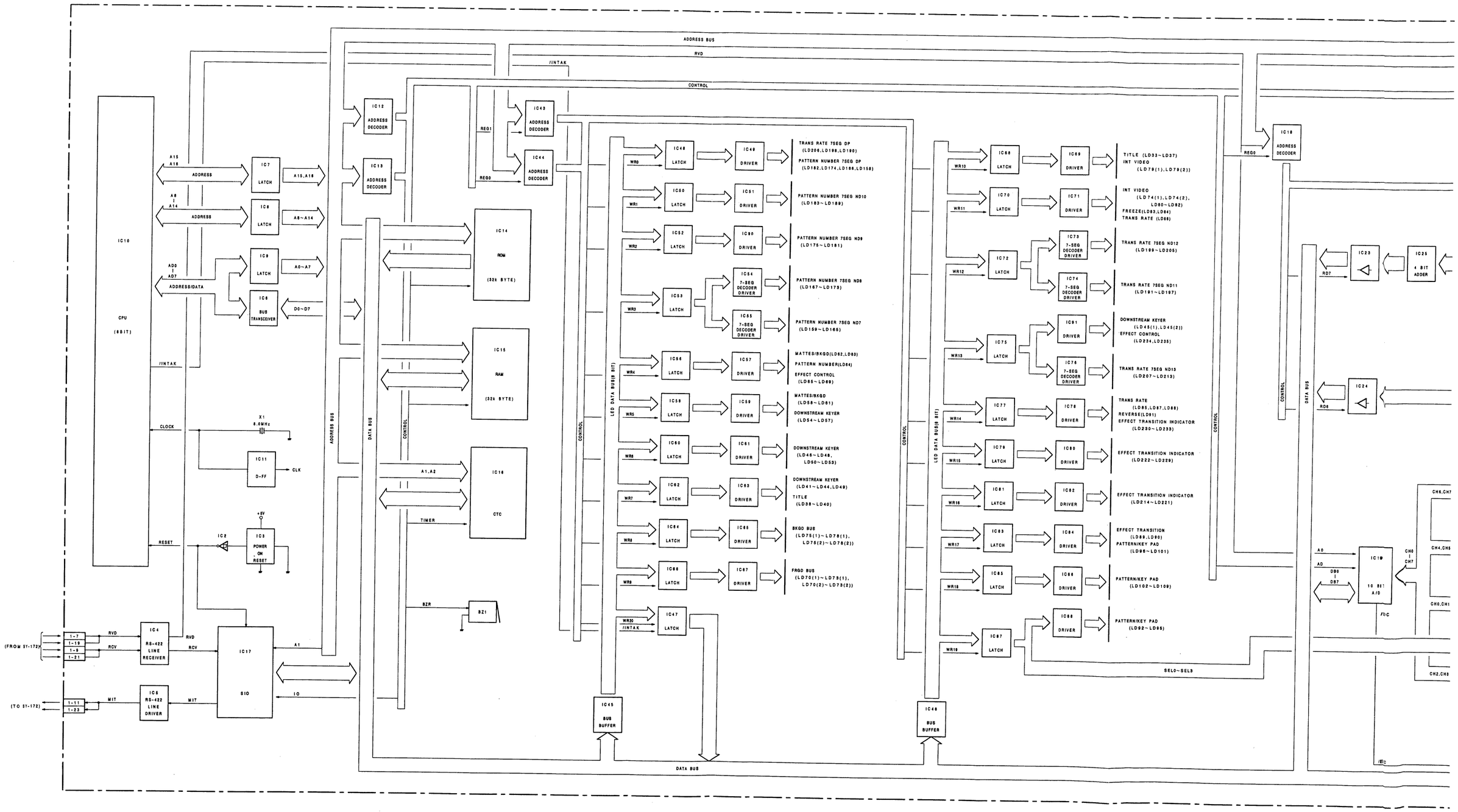

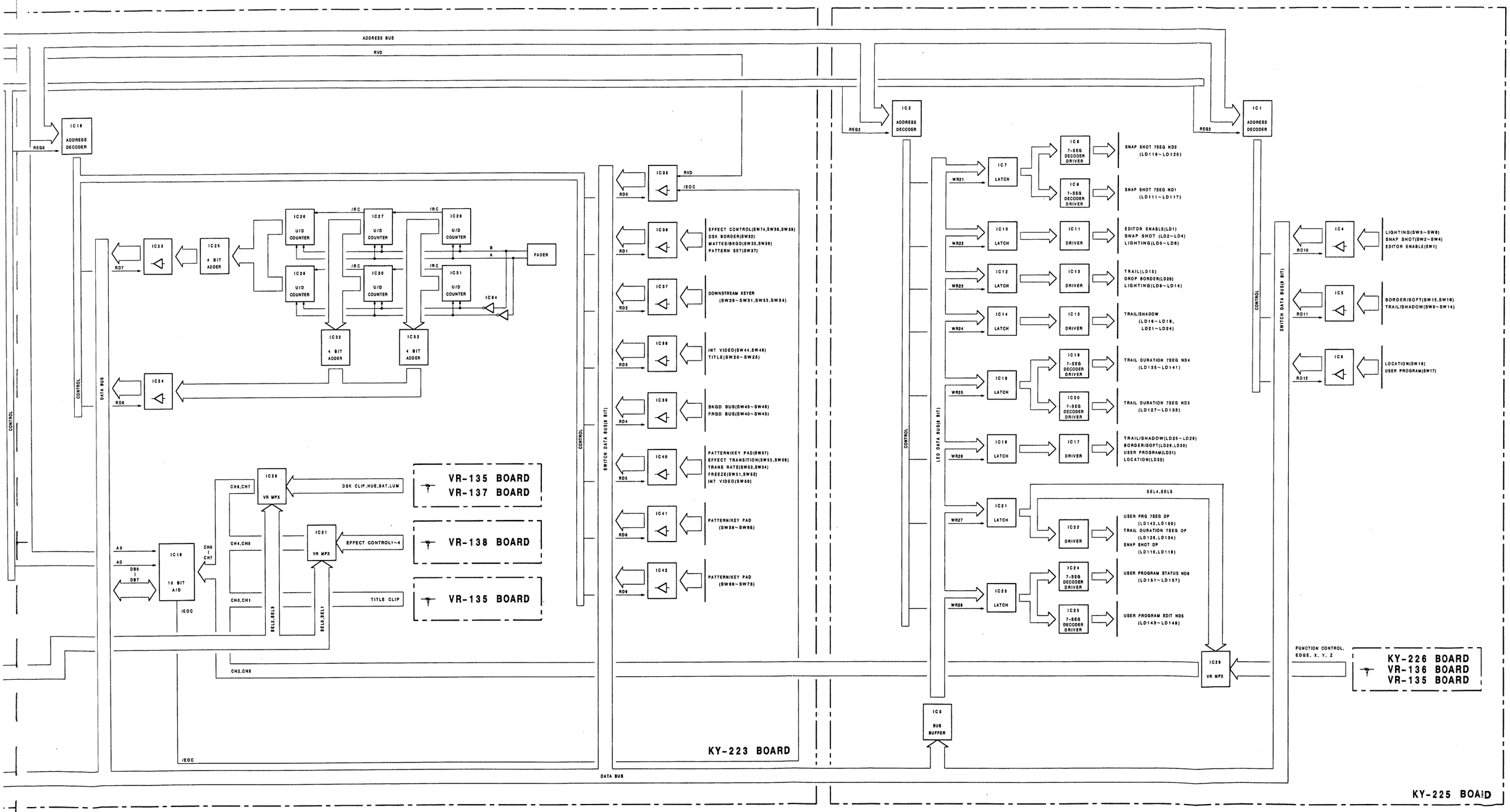

CONTROL PANEL BLOCK DIAGRAM

DFS-500
DFS-500P

SECTION 5
SCHEMATIC DIAGRAMS

Board	Function	Page
AD-76(1/7)	Input Crosspoint, Title Key Process,Voltage REG.	5-3
AD-76(2/7)	A Y/C Separator & Clock Generator	5-5
AD-76(3/7)	A Chroma Decoder & A/D Converter	5-7
AD-76(4/7)	A Write Clock Generator	5-9
AD-76(5/7)	B Y/C Separator & Clock Generator	5-11
AD-76(6/7)	B Chroma Decoder & A/D Converter	5-13
AD-76(7/7)	B Write Clock Generator	5-15
FM-29(1/6)	A Frame Memory & Write Controller	5-17
FM-29(2/6)	B Frame Memory & Write Controller	5-19
FM-29(3/6)	Control Register, Memory Read Controller	5-21
FM-29(4/6)	Internal Video Signal Generator	5-23
FM-29(5/6)	BKGD Bus Field Delay Memory	5-25
FM-29(6/6)	FRGD Bus Digital Lowpass Filter	5-27
MY-54(1/3)	Control Register, Address Counter,Title Key Process	5-29
MY-54(2/3)	Video Effect Memory	5-31
MY-54(3/3)	Matrix Memory, Interpolater	5-33
PU-78(1/3)	Control Register, Front-End Address Calculator	5-35
PU-78(2/3)	Look Up Table Memory	5-37
PU-78(3/3)	Back-End Address Calculator	5-39
DA-63(1/5)	SYNC Generator	5-41
DA-63(2/5)	Digital M/E & D/A Converter	5-43
DA-63(3/5)	PGM Out (Composite, S) Processor & B.B Generator	5-45
DA-63(4/5)	PGM Out (Component) & Key Out PRO	5-47
DA-63(5/5)	Address & Data Bus Driver	5-49
SY-172(1/2)	Effect CPU	5-51
SY-172(2/2)	Main CPU	5-53
CN-573	Connector Board	5-55
MB-385	Mother Board	5-57
KY-223(1/3)	CPU	5-59
KY-223(2/3)	LED Driver	5-61
KY-223(3/3)	LED & Switch	5-63
KY-225(1/2)	LED Driver	5-65
KY-225(2/2)	LED & Switch	5-67
FRAME WIRING(1/3)	Process Unit	5-69
FRAME WIRING(2/3)	Process Unit	5-71
FRAME WIRING(3/3)	Control Panel	5-73

注意1；⚠ 印のついた部品は安全性を維持するために重要な部品です。
従って交換する時は必ず指定の部品を使って下さい。

NOTE:
The ⚠-marked components are critical to sefety.
Replace only with same components as specified.

AD-76(1/7);Input Crosspoint,Title Key Process,Voltage REG.

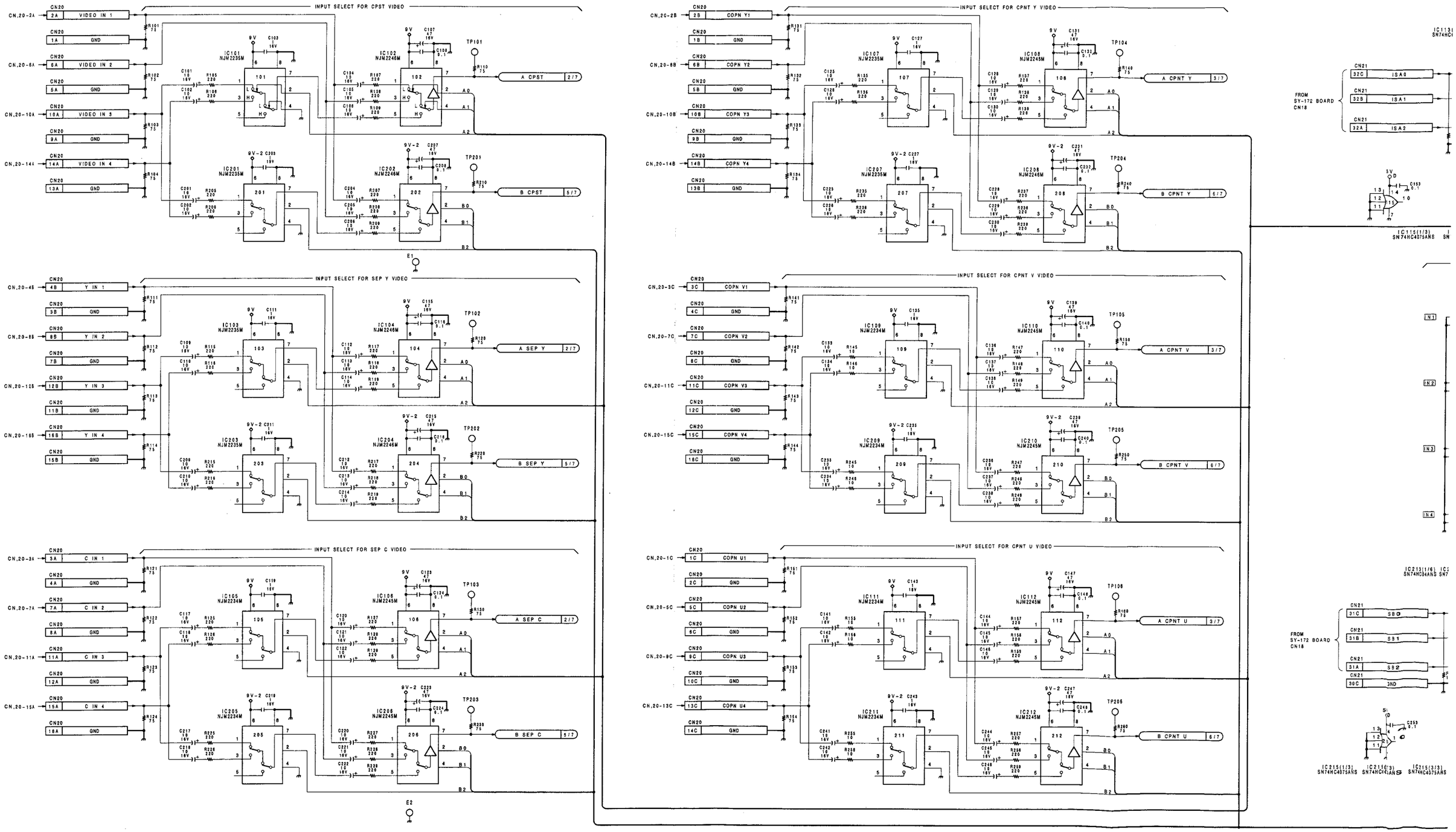

A | B | C | D | E | F | G | H | I

AD-76(1/7) PROCESS UNIT

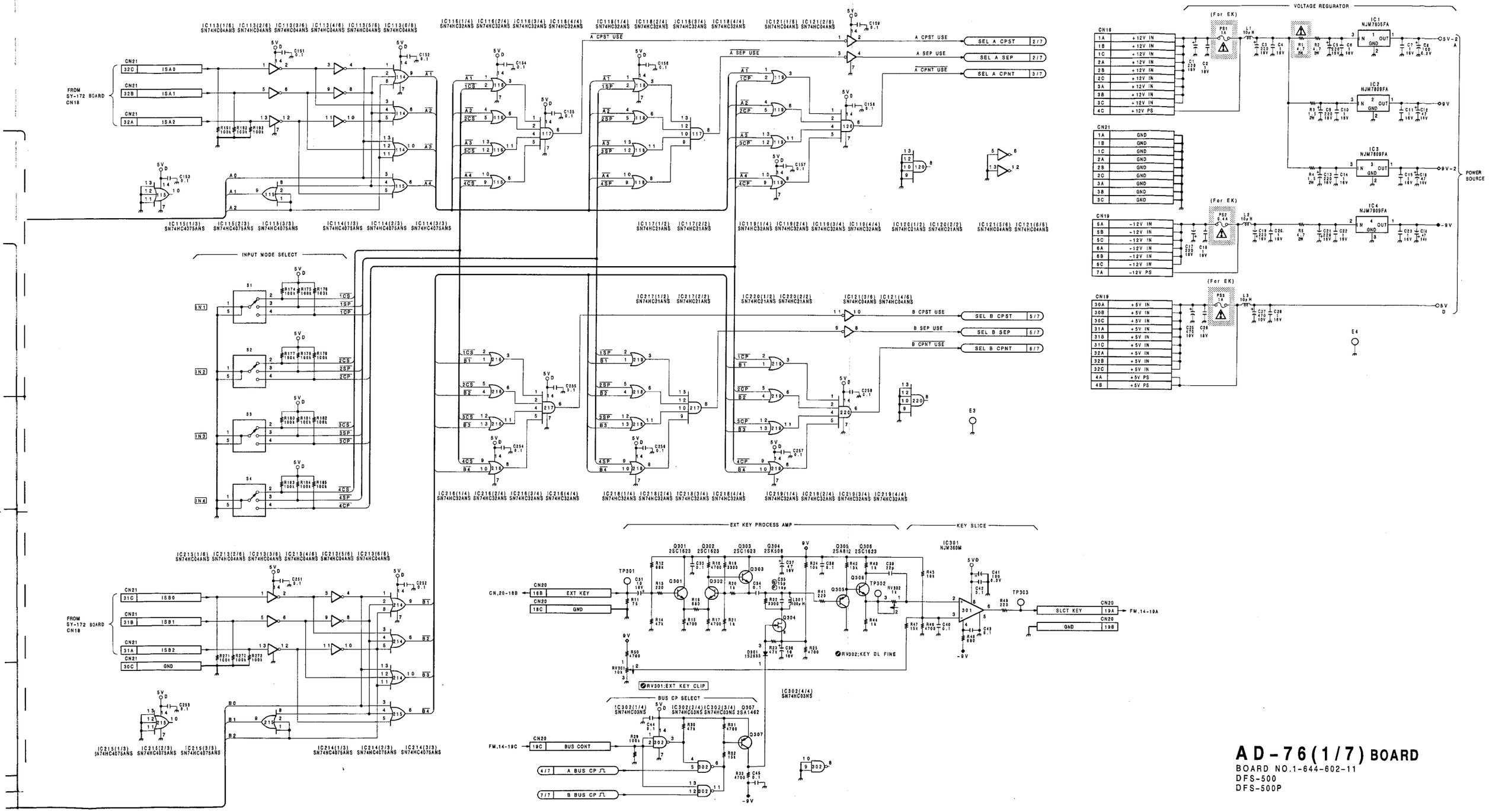

AD-76(1/7) BOARD

BOARD NO.1-644-602-11
DFS-500
DFS-500P

AD-76(2/7);A Y/C Separator & Clock Generator

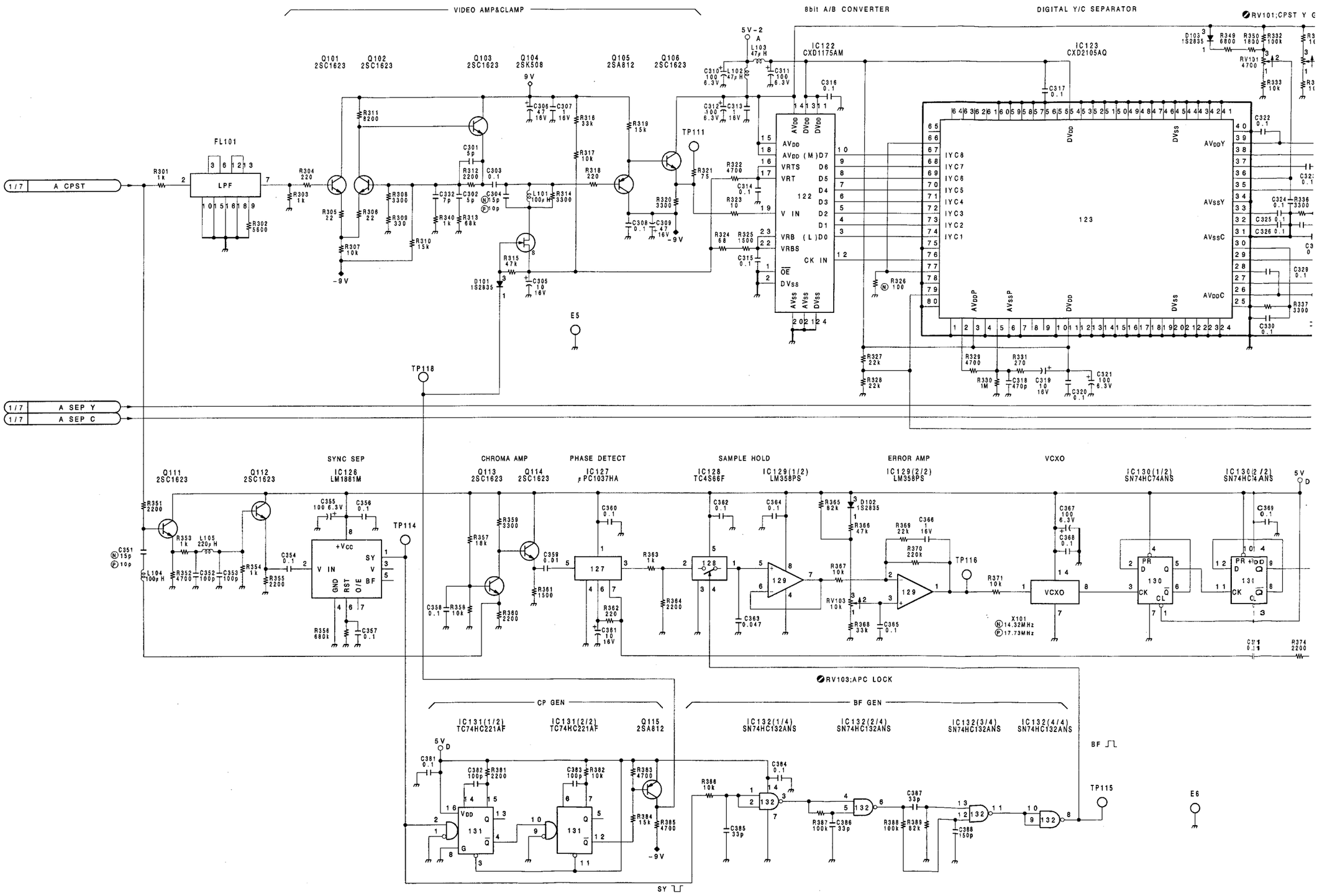

A | B | C | D | E | F | G | H

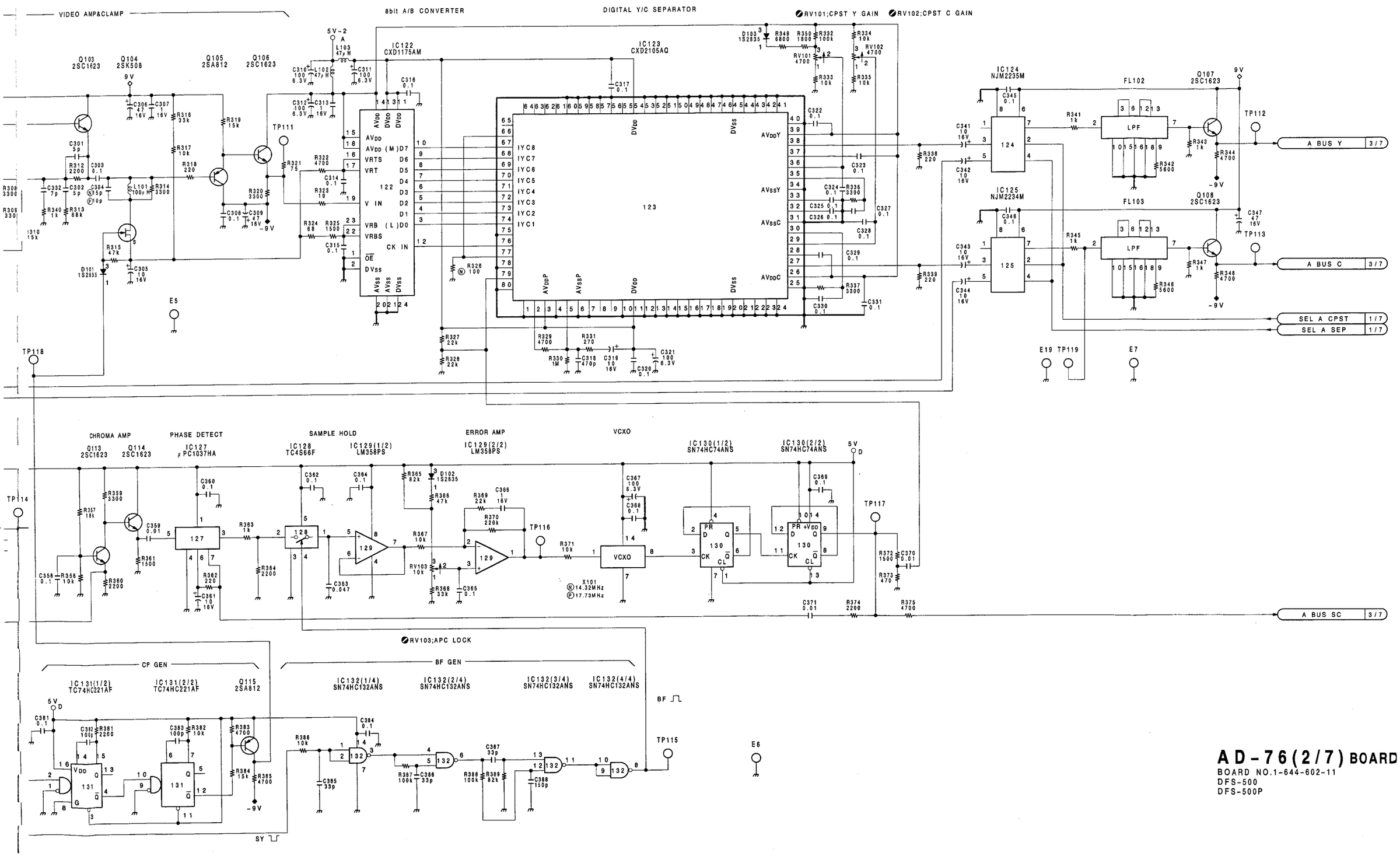

AD-76(2/7) BOARD

BOARD NO.1-644-602-11
DFS-500
DFS-500P

AD-76(3/7);A Chroma Decoder & A/D Converter

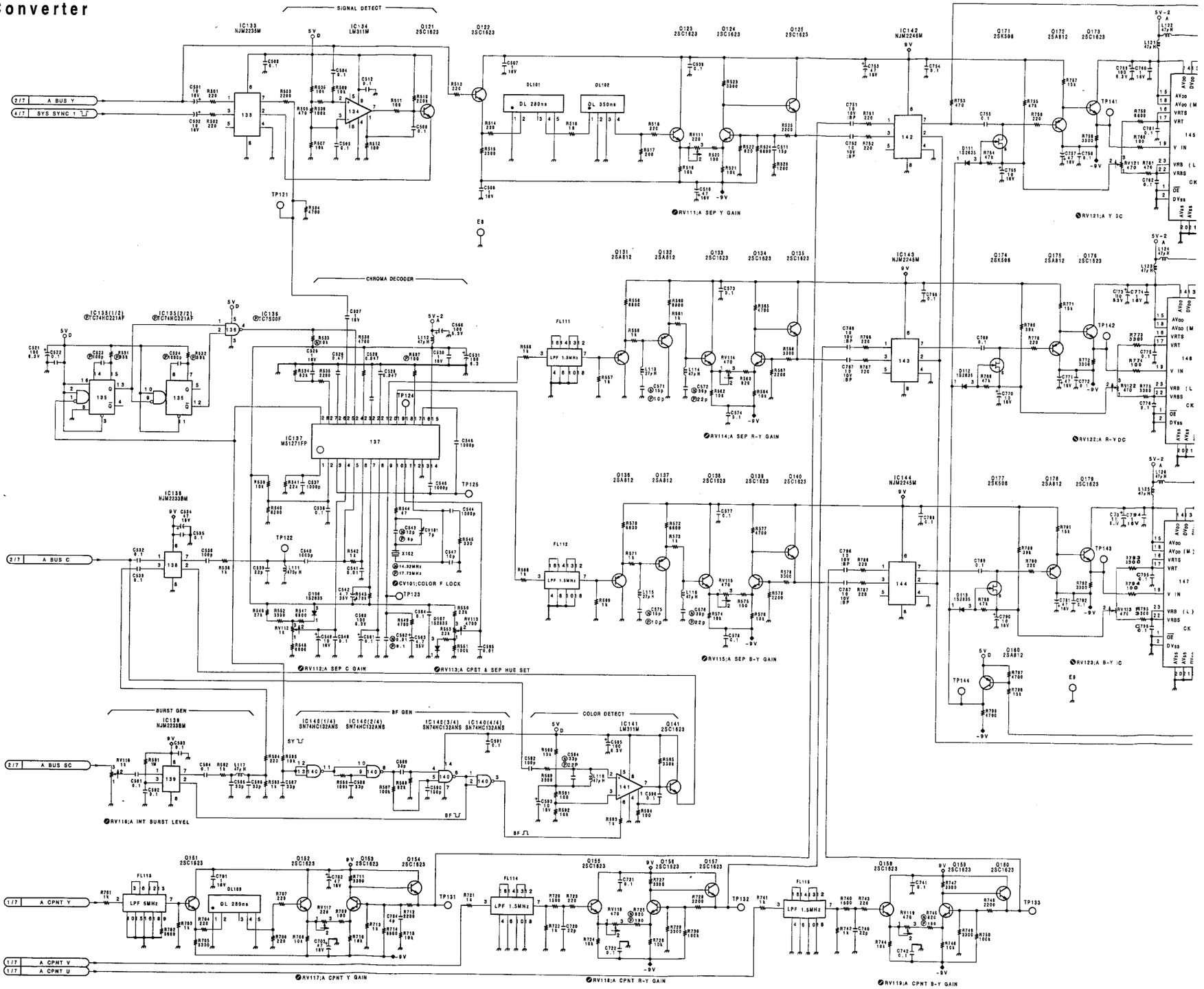

AD-76(3/7) BOARD

BOARD NO.1-644-602-11
DFS-500
DFS-500P

AD-76(4/7);A Write Clock Generator

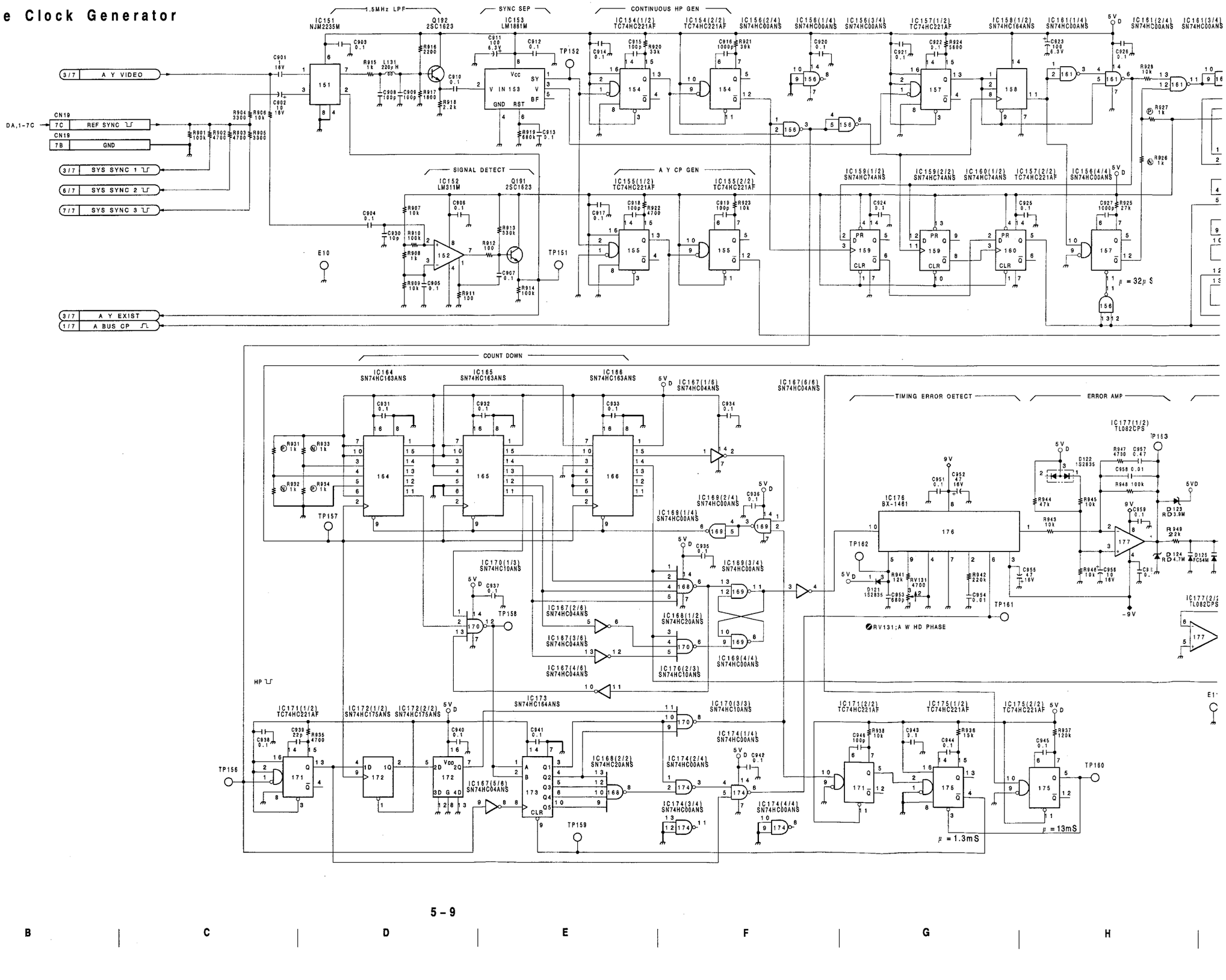

A | B | C | D | E | F | G | H

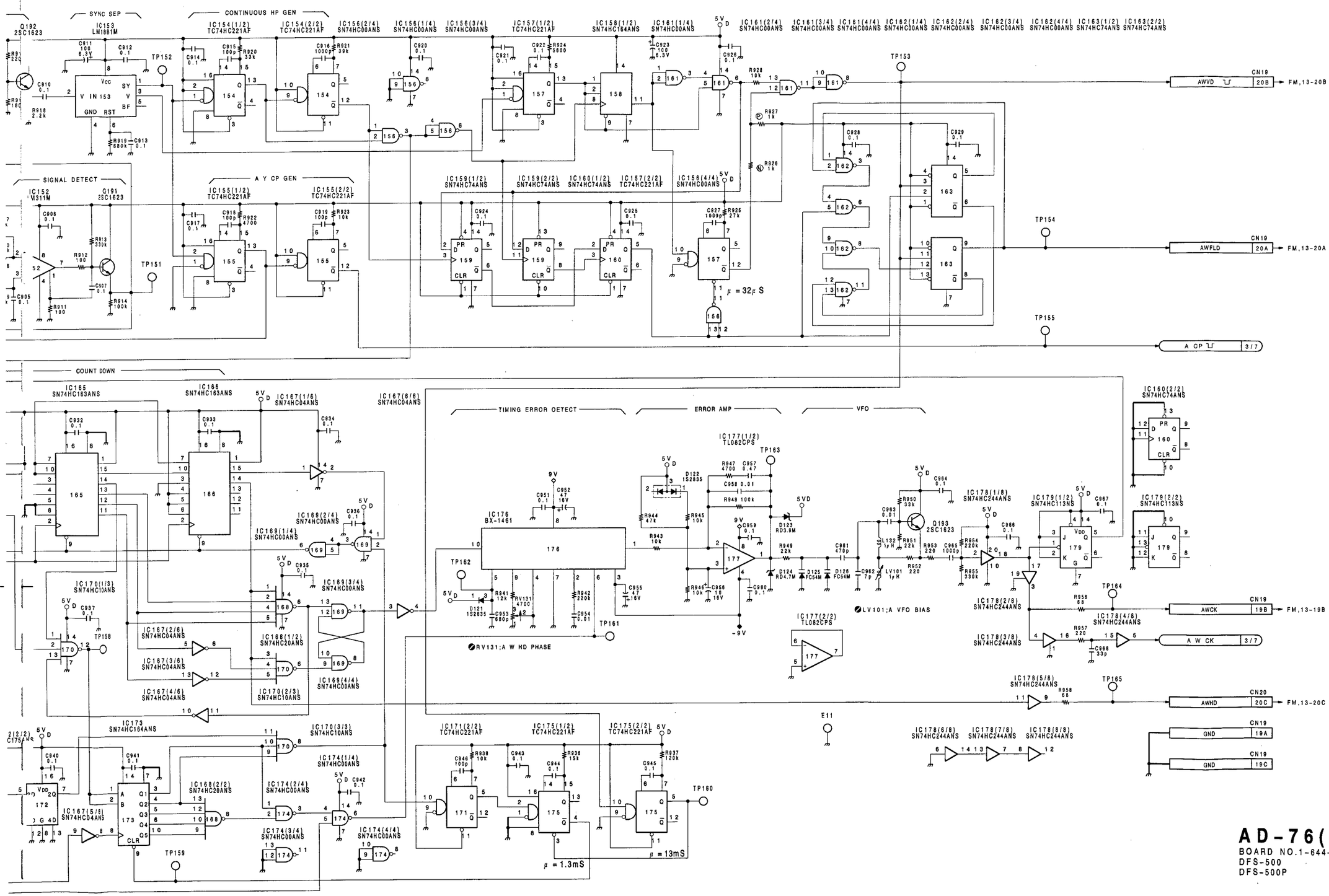

AD-76(4/7) BOARD

BOARD NO.1-644-602-11
DFS-500
DFS-500P

AD-76(5/7);B Y/C Separator & Clock Generator

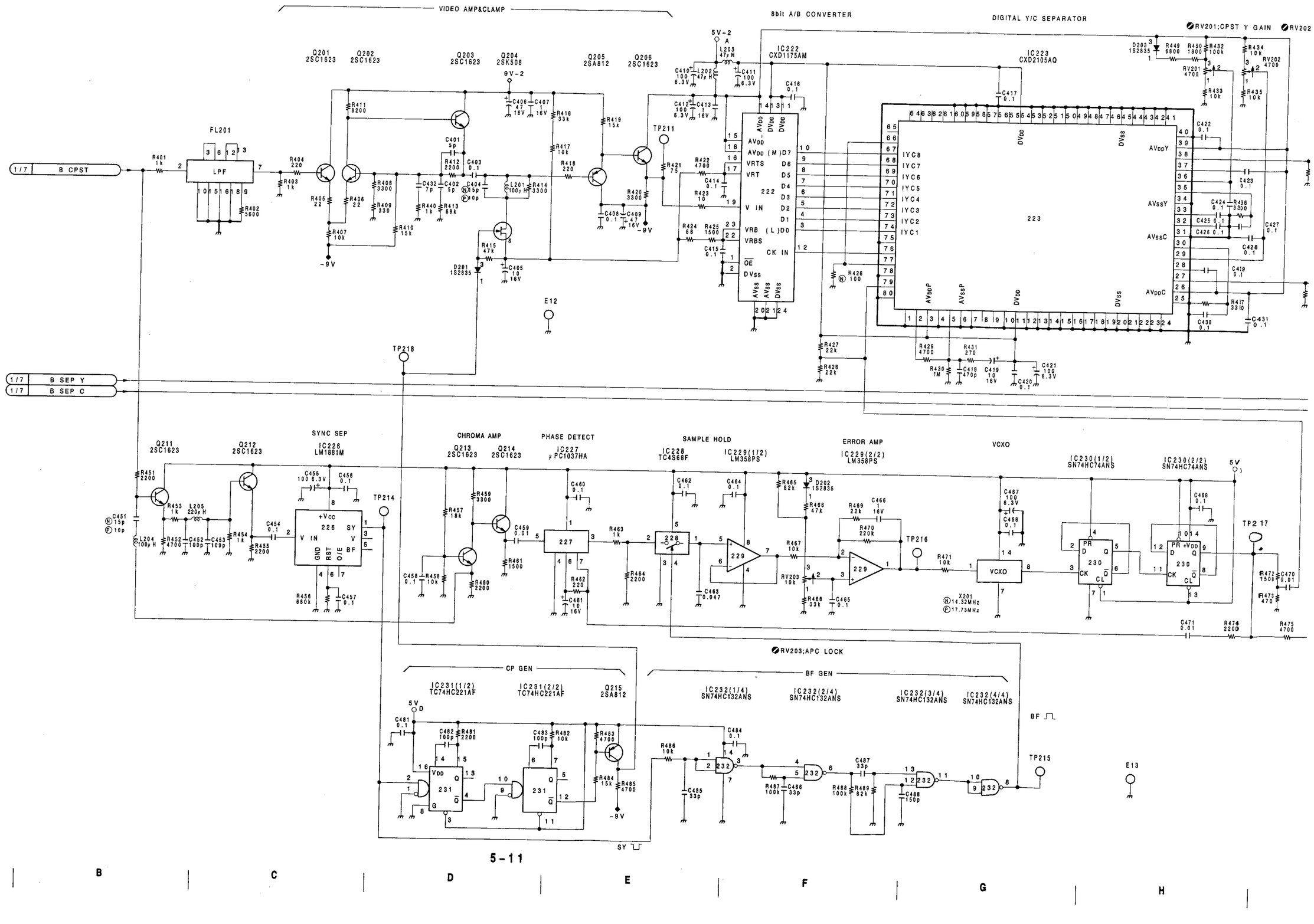

:LAMP

8bit A/B CONVERTER

DIGITAL Y/C SEPARATOR

RV201;CPST Y GAIN RV202;CPST C GAIN

IC222 CXD1175AM

IC223 CXD2105AQ

IC224 NJM2235M

IC225 NJM2234M

Q204 2SK508

Q205 2SA812

Q206 2SC1623

Q207 2SC1623

Q208 2SC1623

FL202

FL203

LPF

9V-2

5V-2

-9V

TP211

TP212

TP213

B BUS Y 6/7

B BUS C 6/7

SEL B CPST 1/7

SEL B SEP 1/7

E12

E14

OMA AMP

PHASE DETECT

SAMPLE HOLD

ERROR AMP

VCXO

IC227 μPC1037HA

IC228 TC4S66F

IC229(1/2) LM358PS

IC229(2/2) LM358PS

IC230(1/2) SN74HC74ANS

IC230(2/2) SN74HC74ANS

5V

TP216

TP217

X201 (N)14.32MHz (P)17.73MHz

B BUS SC 6/7

RV203;APC LOCK

CP GEN

BF GEN

IC231(2/2) TC74HC221AF

Q215 2SA812

IC232(1/4) SN74HC132ANS

IC232(2/4) SN74HC132ANS

IC232(3/4) SN74HC132ANS

IC232(4/4) SN74HC132ANS

BF

SY

TP215

E13

AD-76(5/7) BOARD

BOARD NO.1-644-602-11
DFS-500
DFS-500P

AD-76(6/7);B Chroma Decoder & A/D Converter

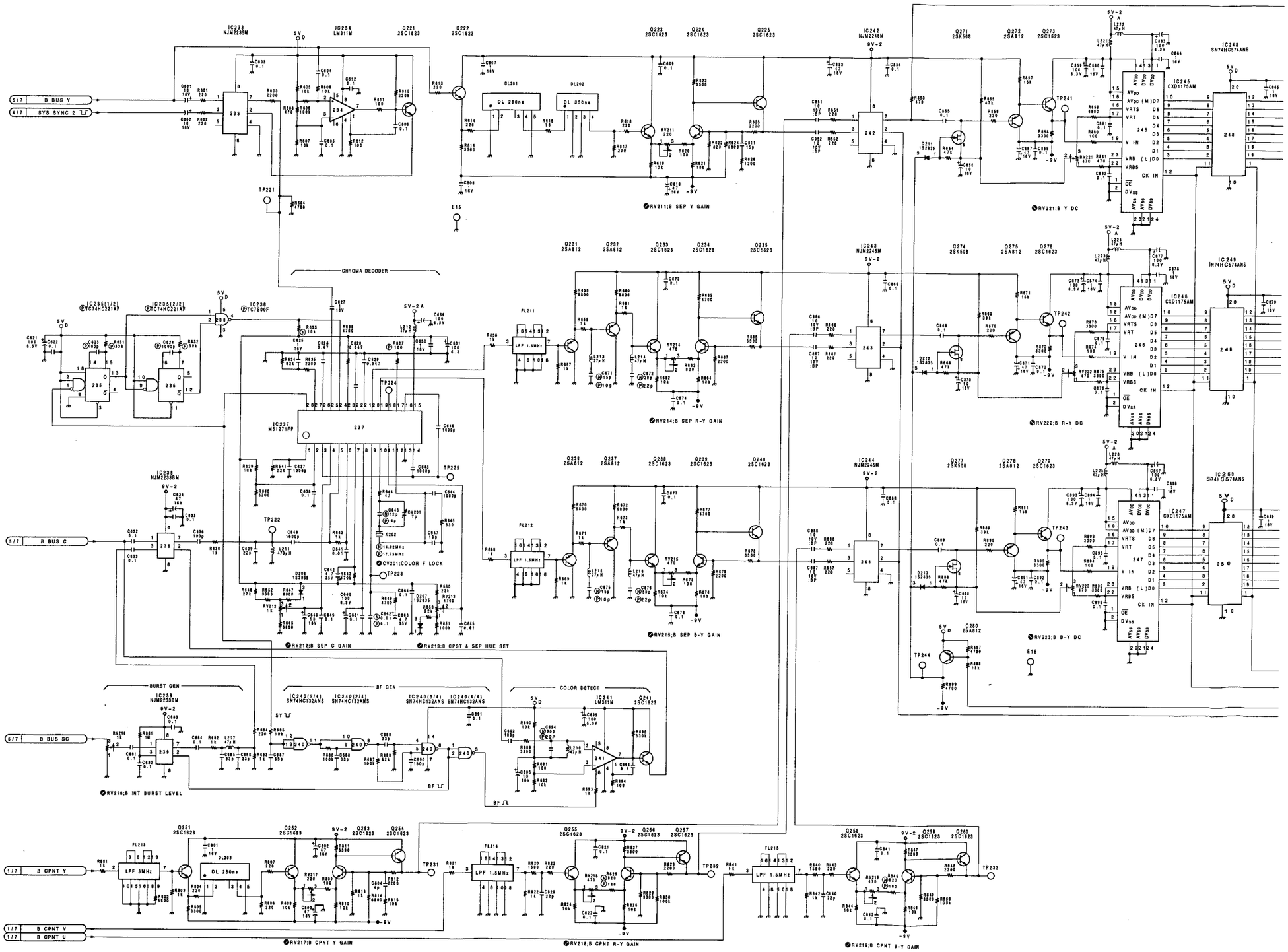

5-13

A | B | C | D | E | F | G | H

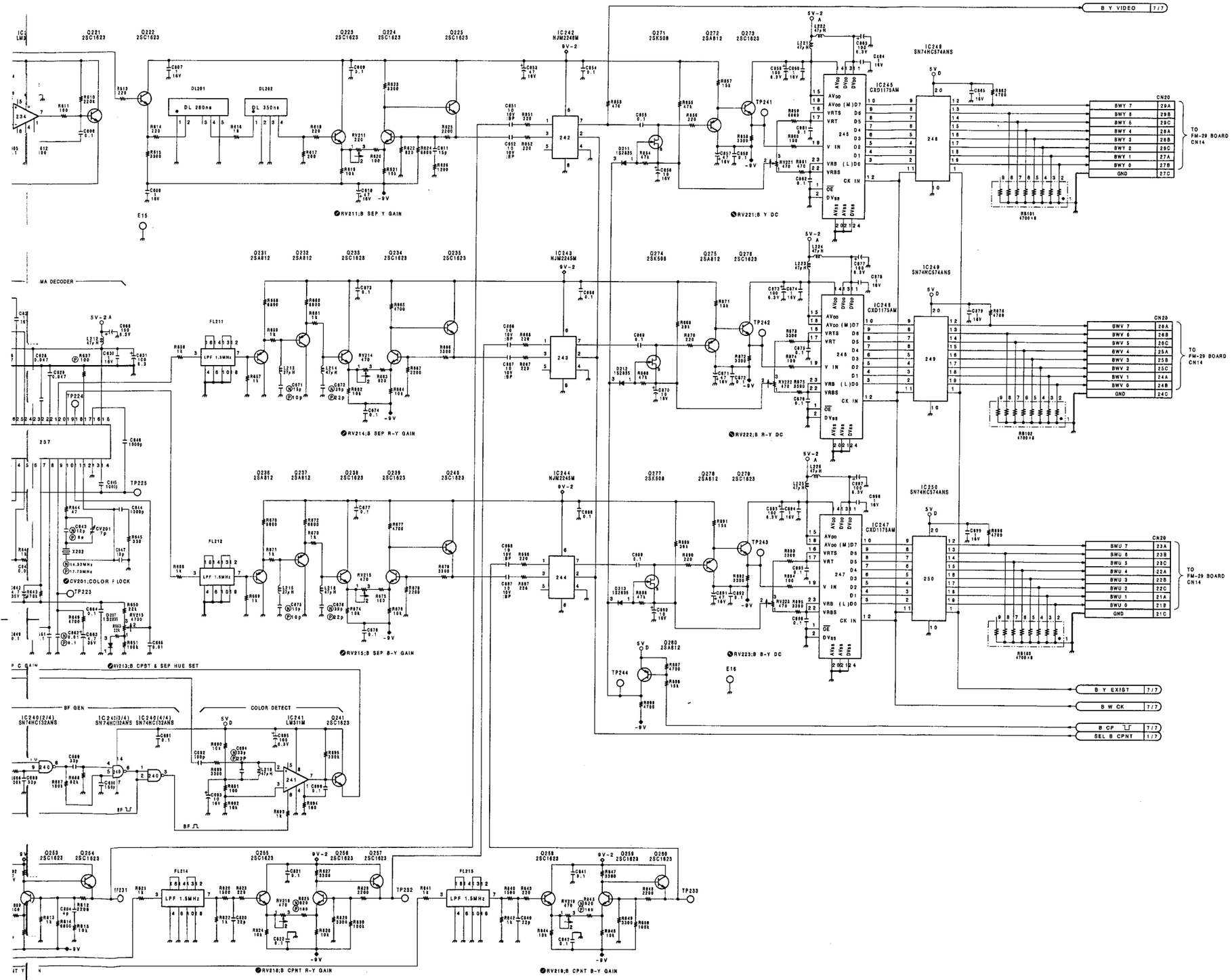

AD-76(6/7) BOARD

BOARD NO.1-644-602-11
DFS-500
DFS-500P

AD-76(7/7);B Write Clock Generator

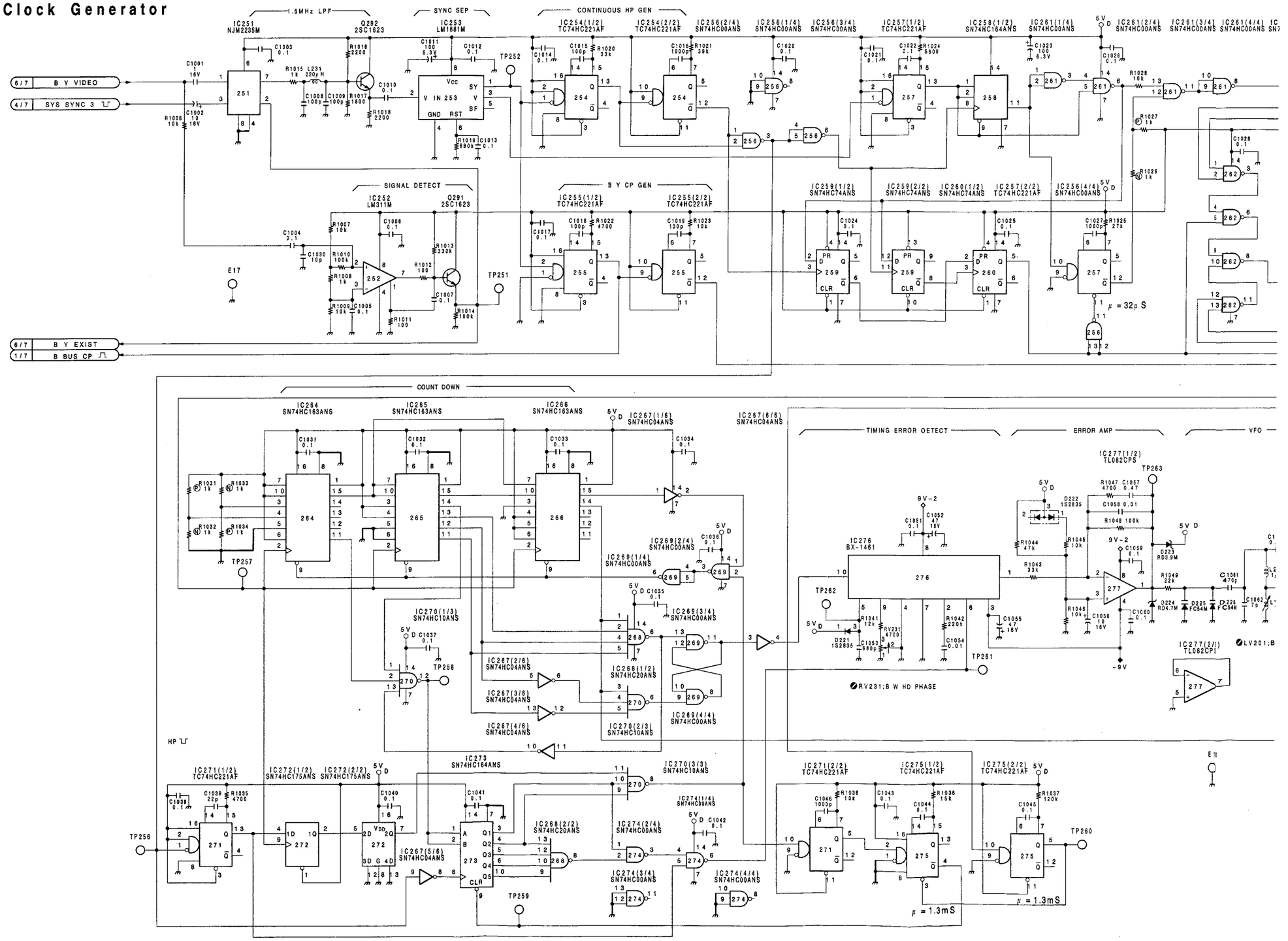

A | B | C | D | E | F | G | H

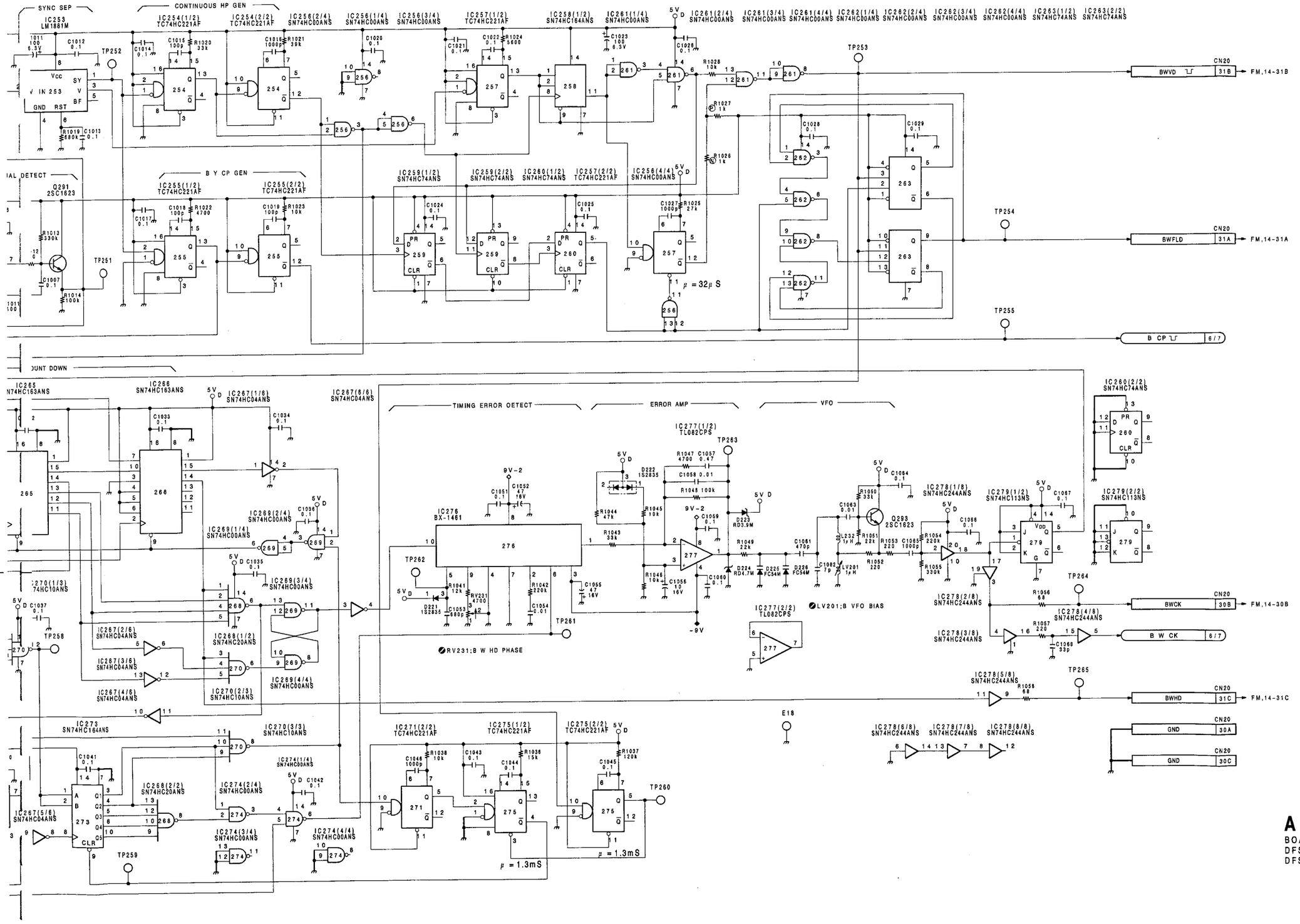

AD-76(7/7) BOARD

BOARD NO.1-644-602-11
DFS-500
DFS-500P

FM-29(1/6);A Frame Memory & Write Controller

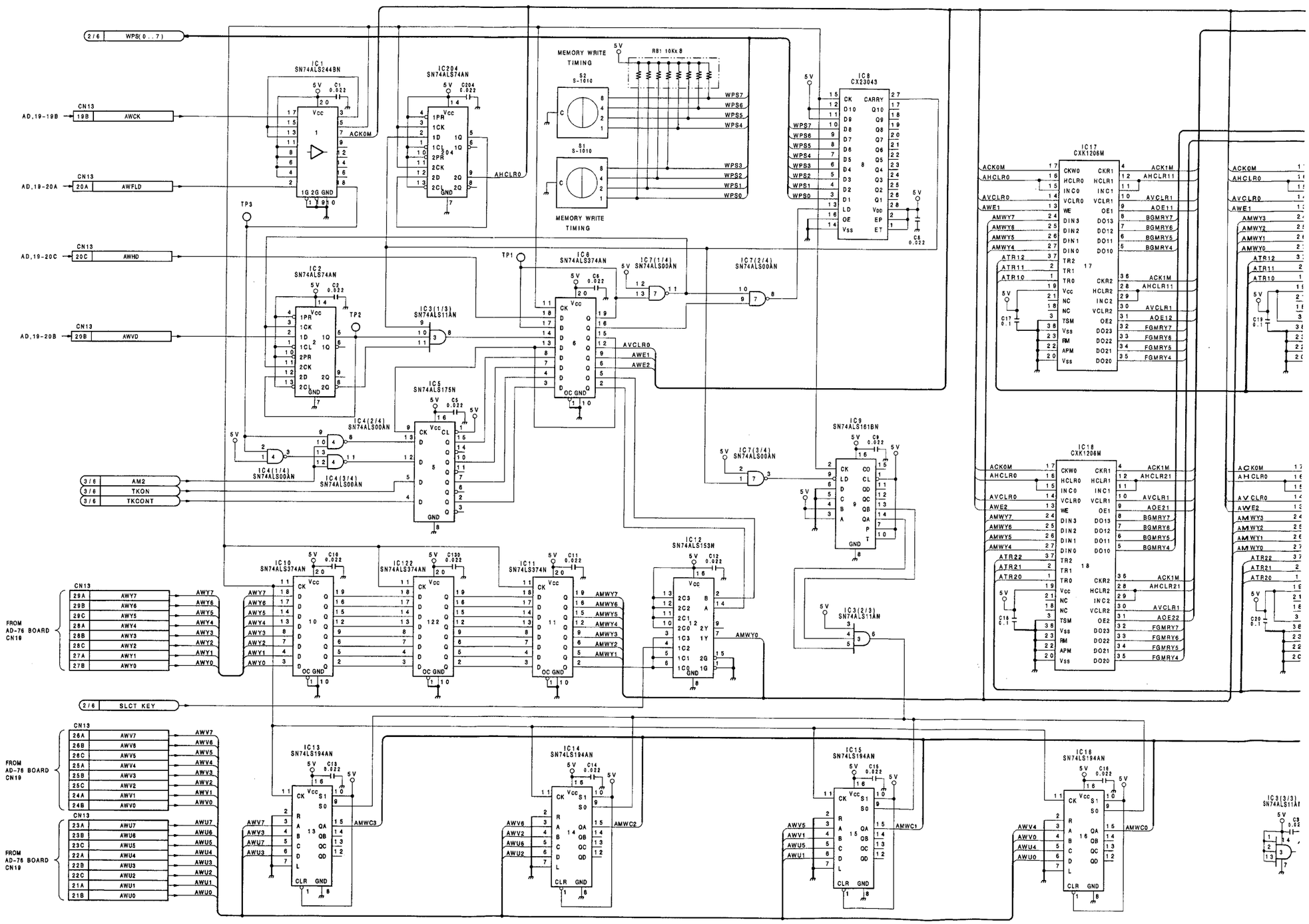

A | B | C | D | E | F | G | H

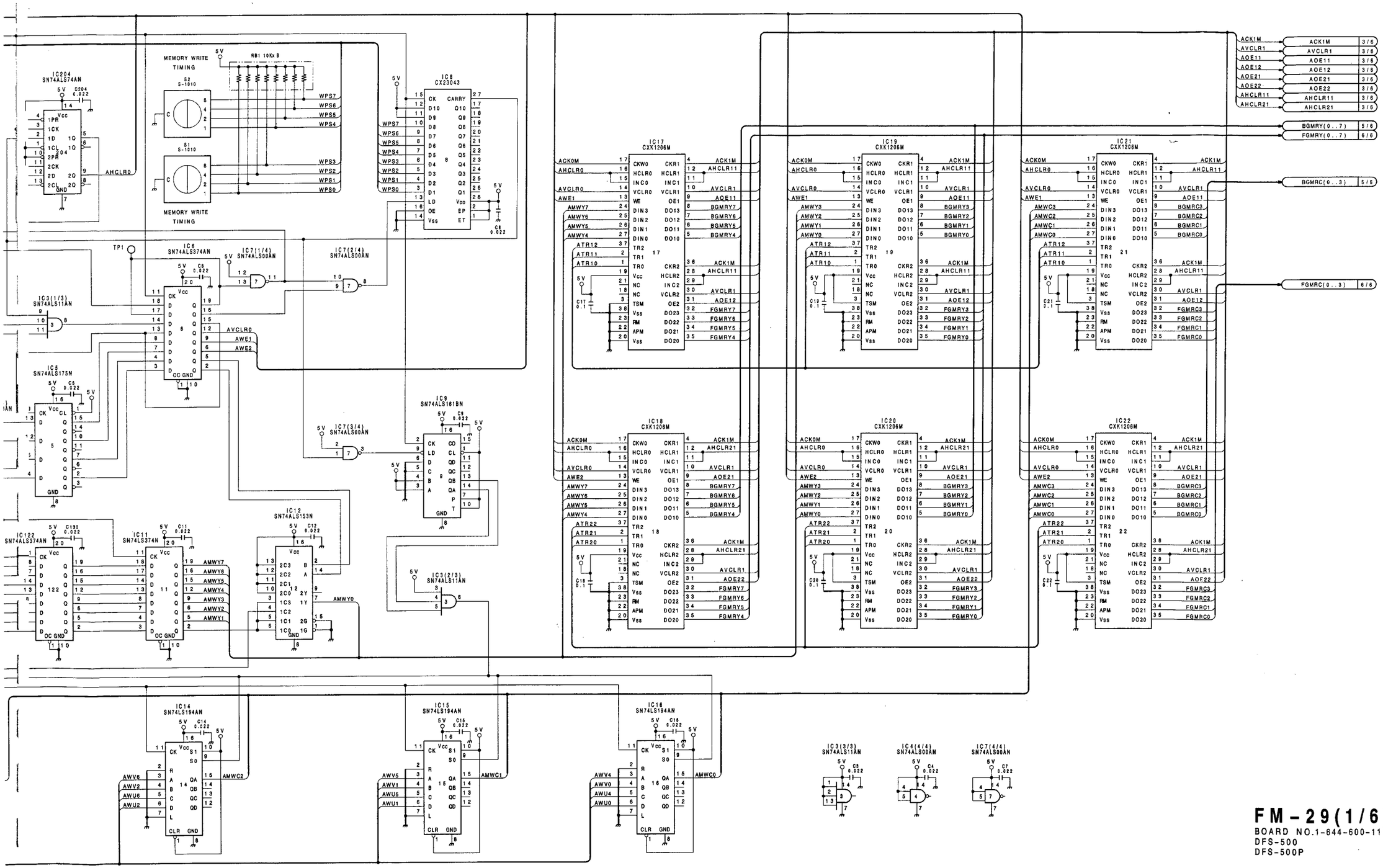

FM-29(1/6) BOARD

BOARD NO.1-644-600-11
DFS-500
DFS-500P

FM-29(2/6);B Frame Memory & Write Controller

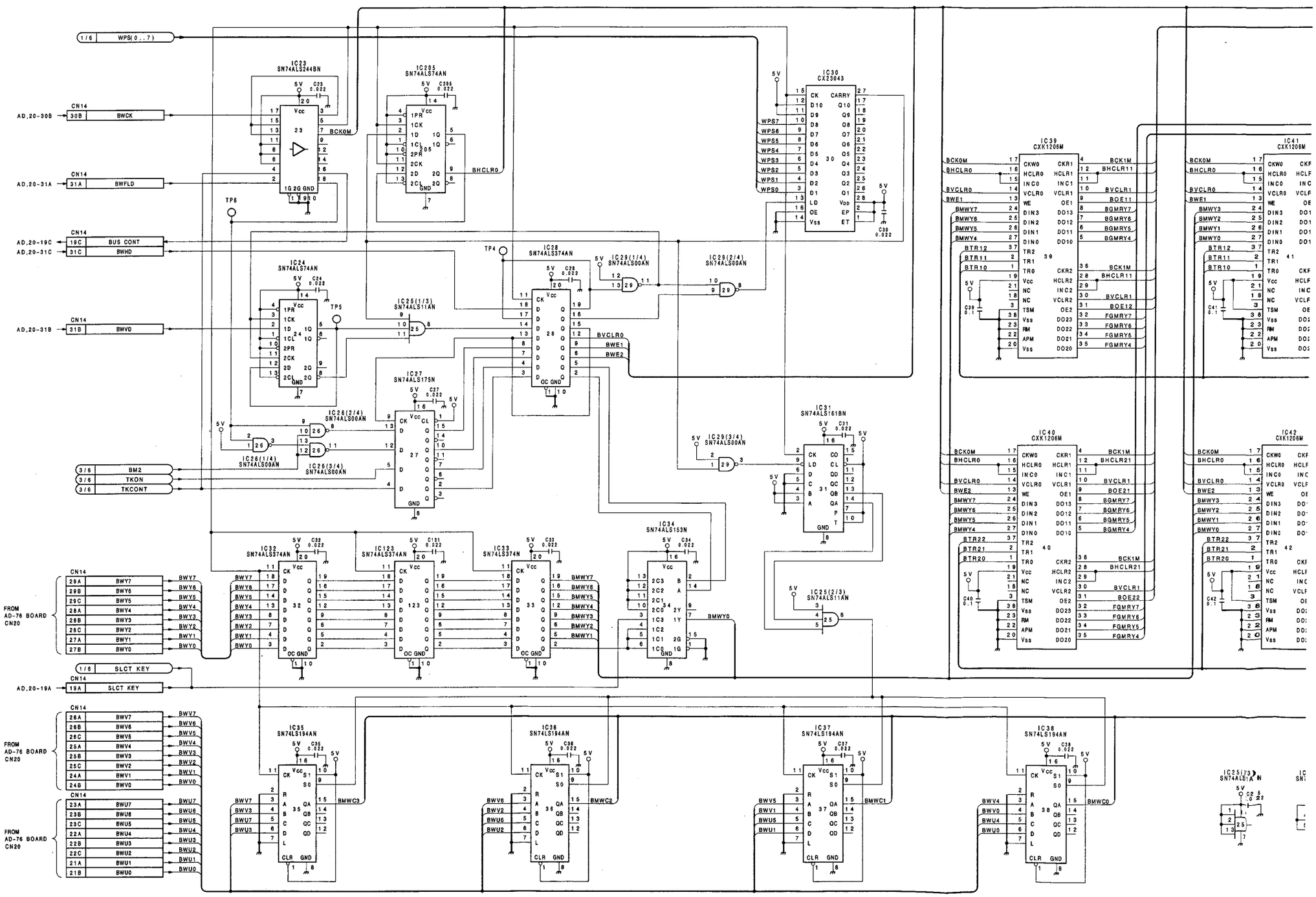

A B C D E F G H

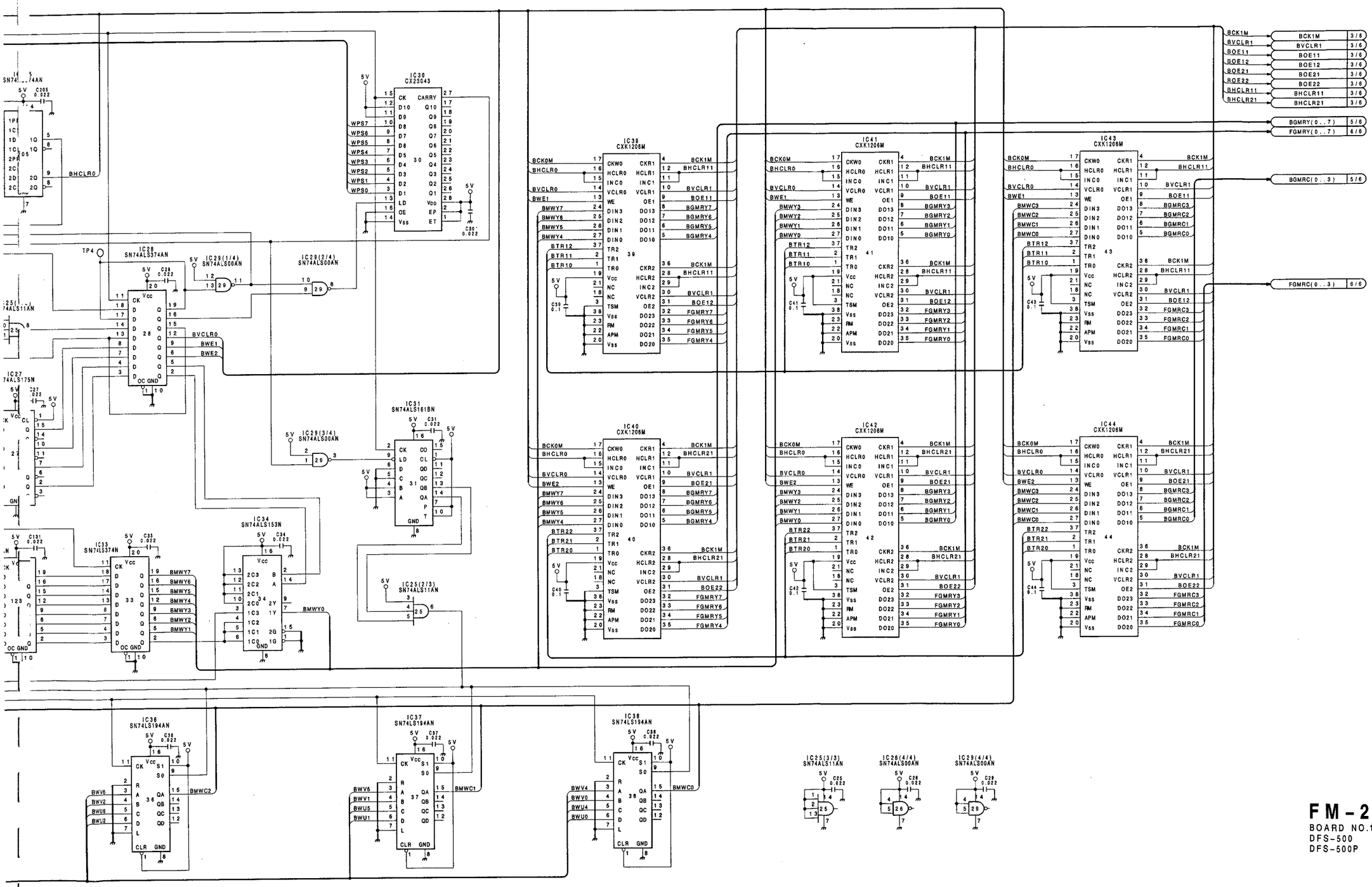

FM-29(2/6) BOARD

BOARD NO.1-644-600-11
DFS-500
DFS-500P

FM-29(3/6);Control Register,Memory Read Controller

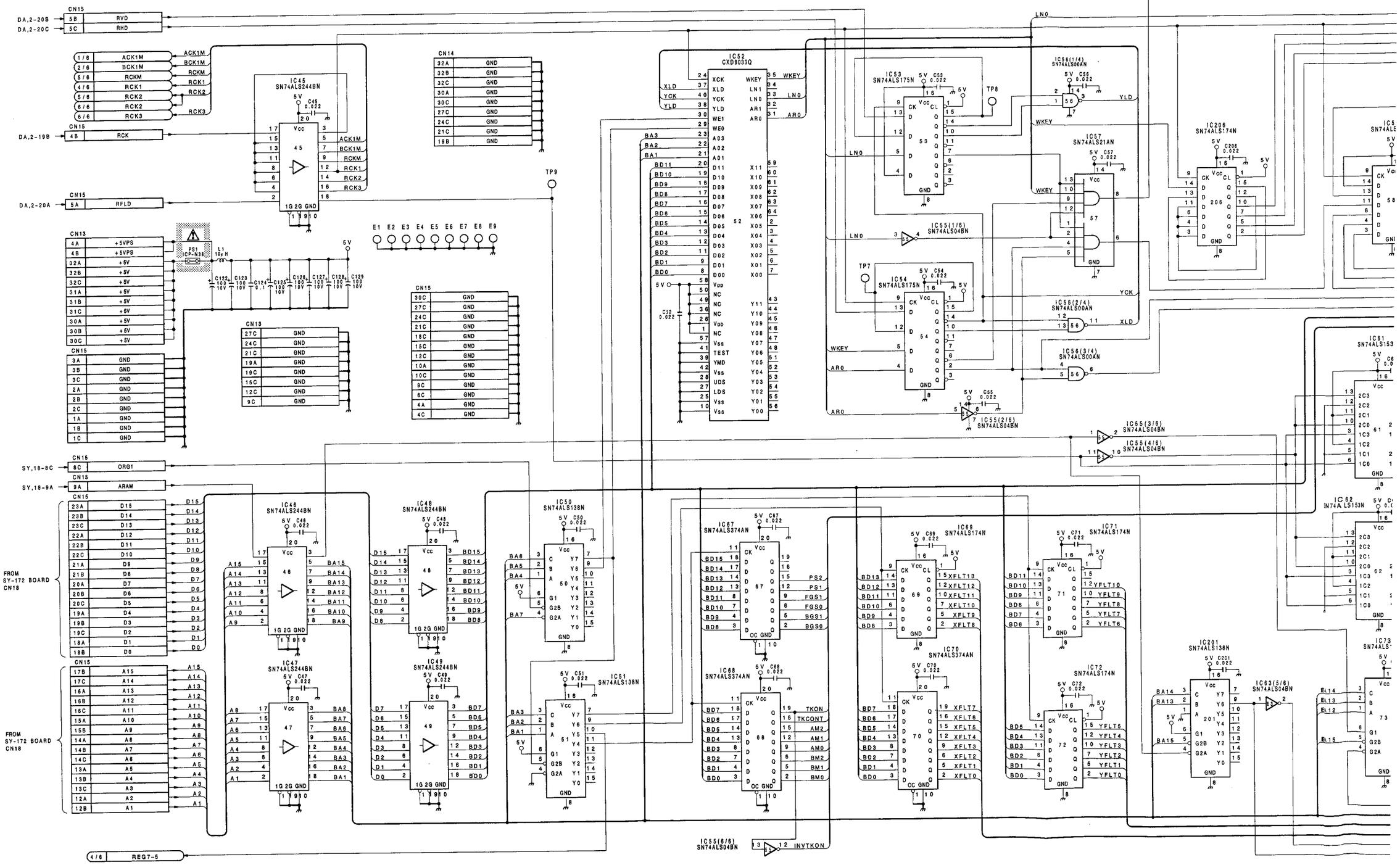

5-21

A | B | C | D | E | F | G | H

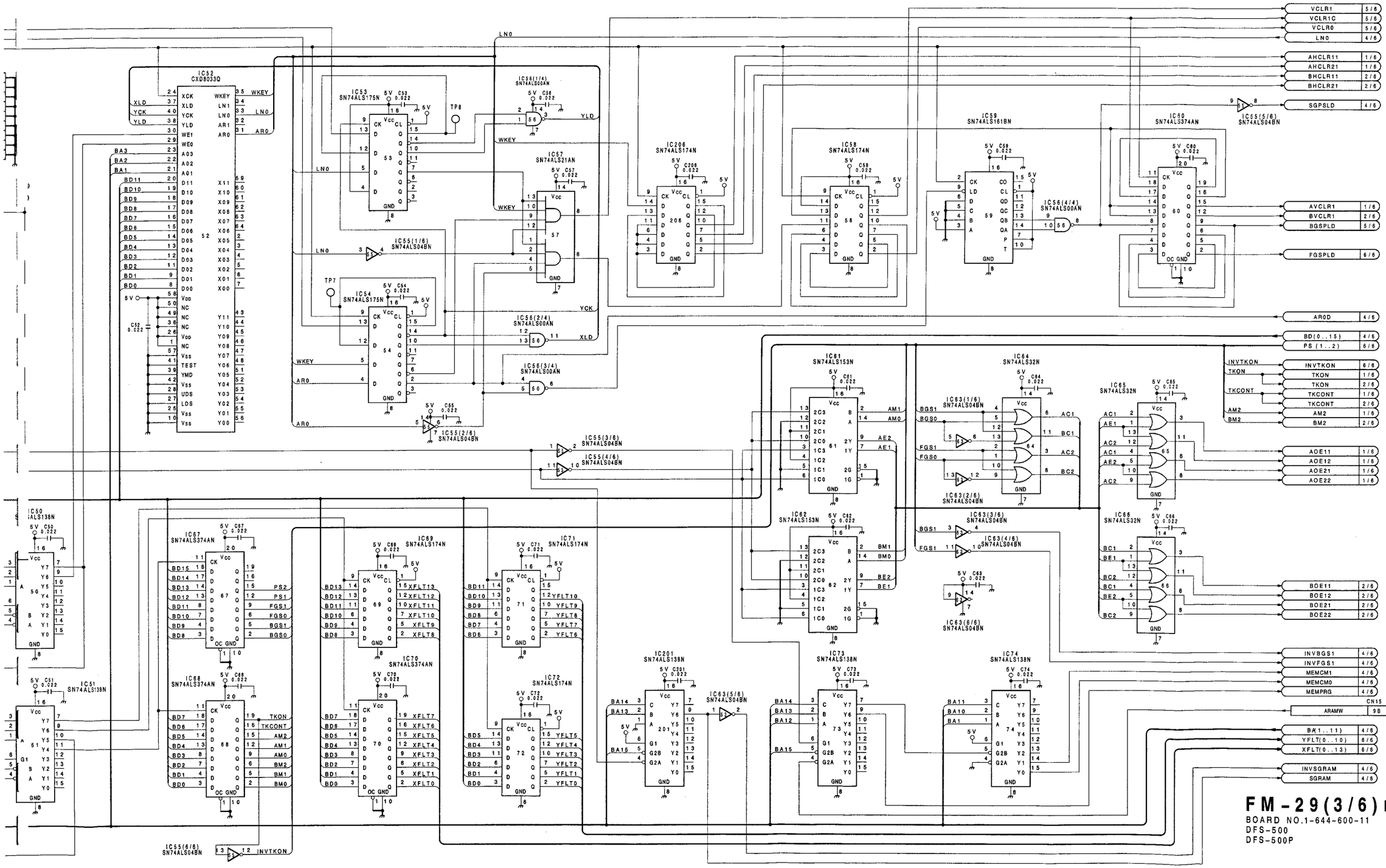

FM-29(3/6) BOARD

BOARD NO.1-644-600-11
DFS-500
DFS-500P

FM-29(4/6);Internal Video Signal Generator

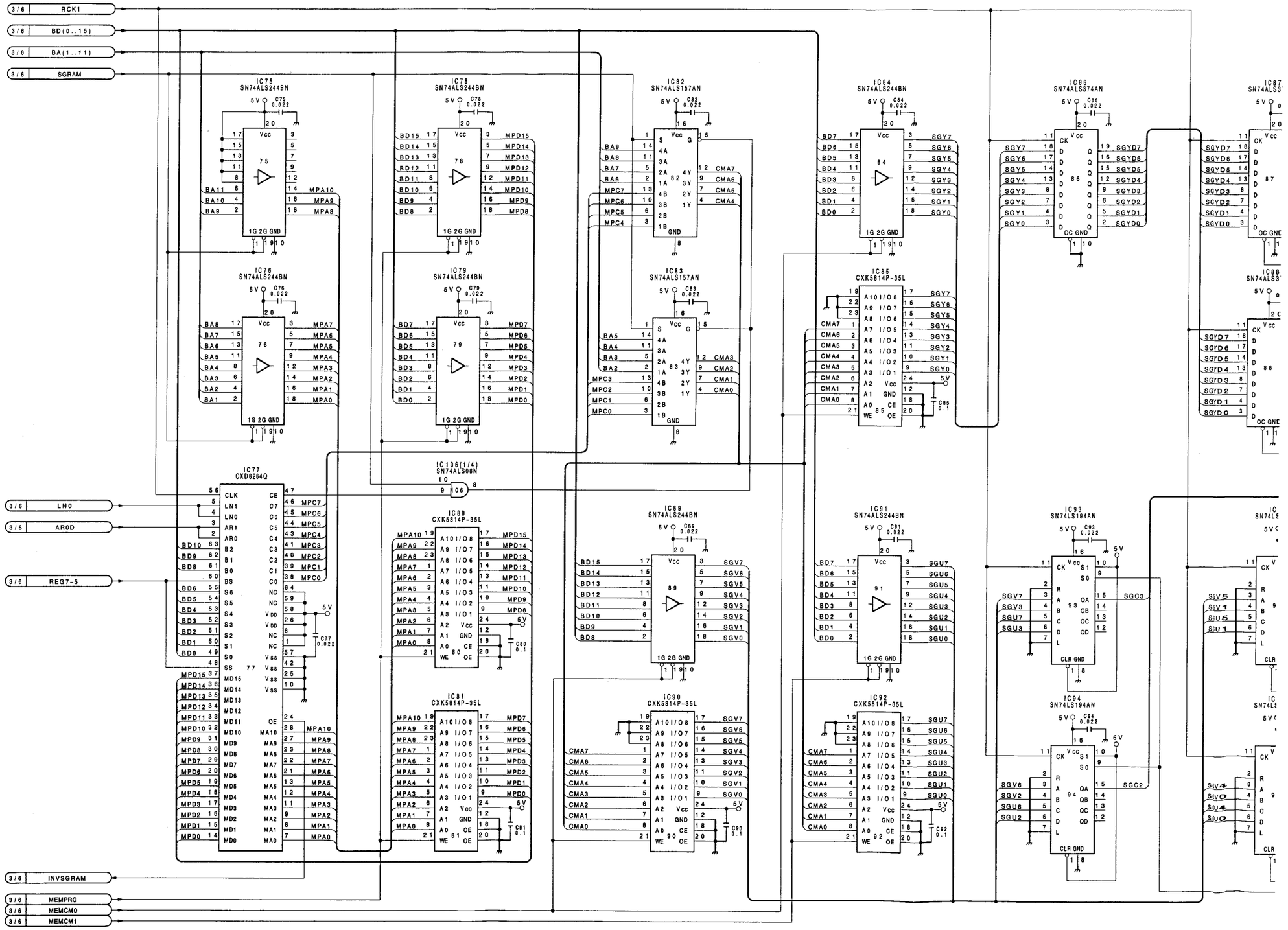

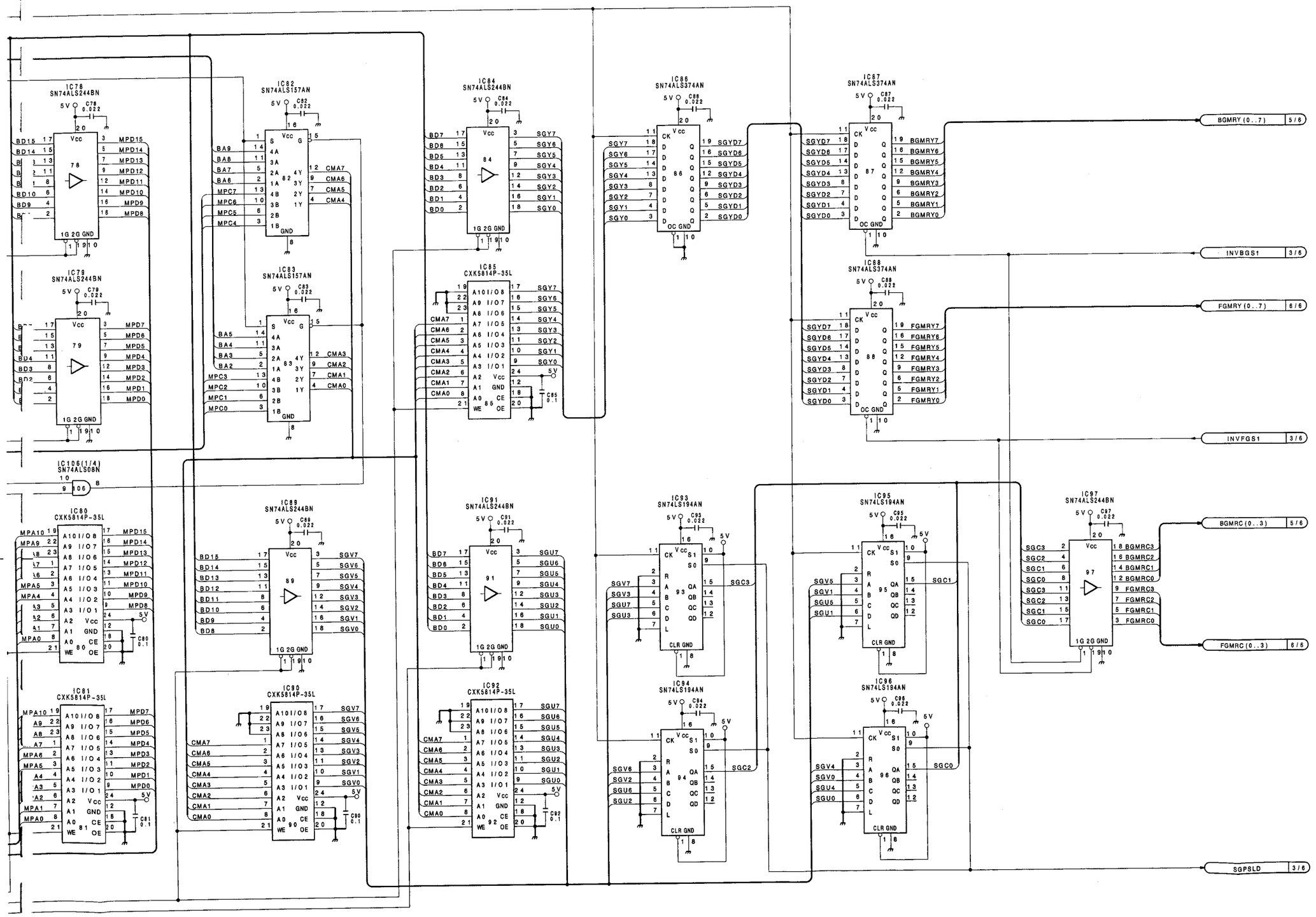

FM-29(4/6) BOARD

BOARD NO.1-644-600-11
DFS-500
DFS-500P

FM-29(5/6);BKGD Bus Field Delay Memory

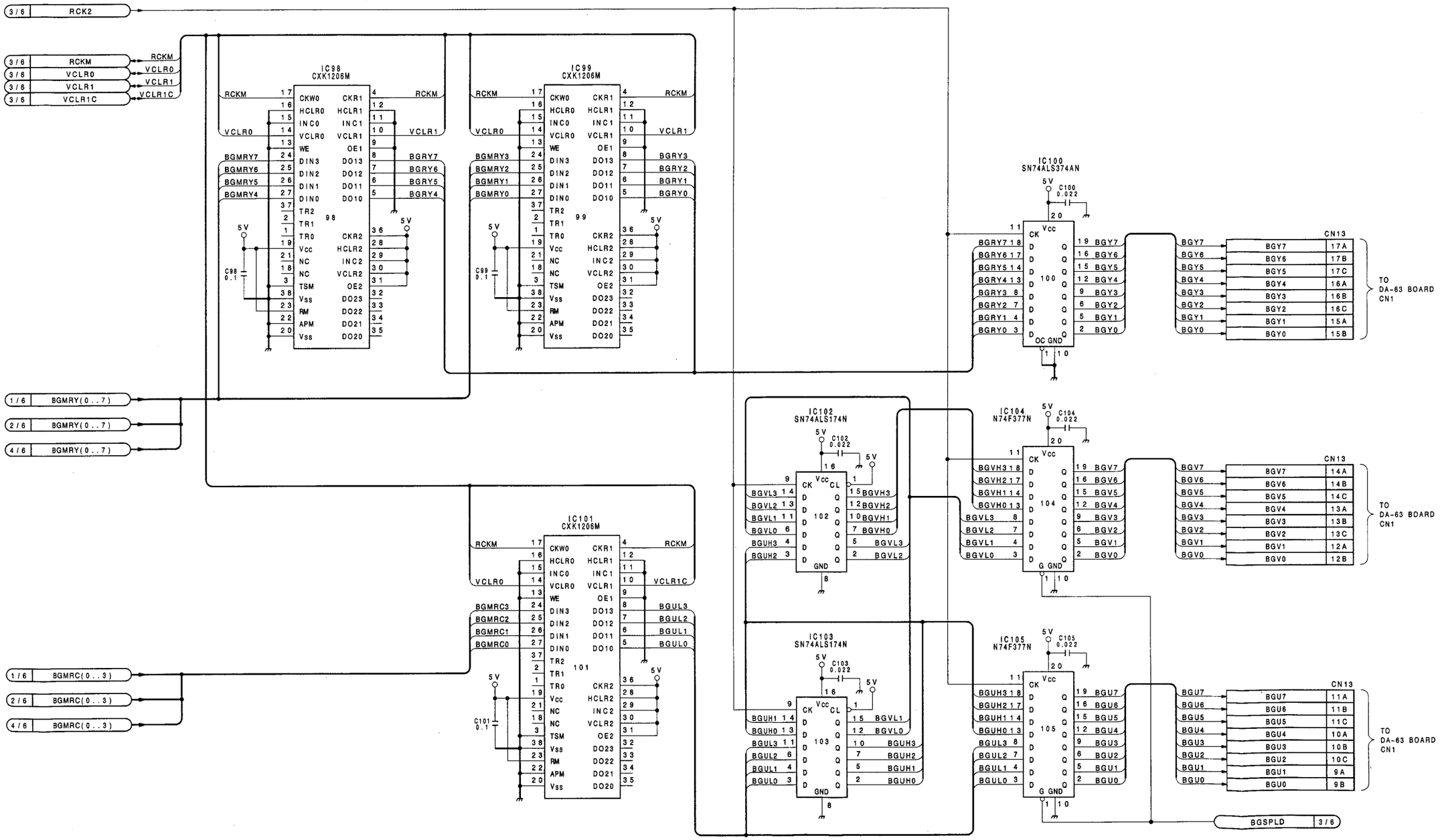

FM-29(5/6) BOARD
BOARD NO.1-644-600-11
DFS-500
DFS-500P

FM-29(6/6);FRGD Bus Digital Lowpass Filter

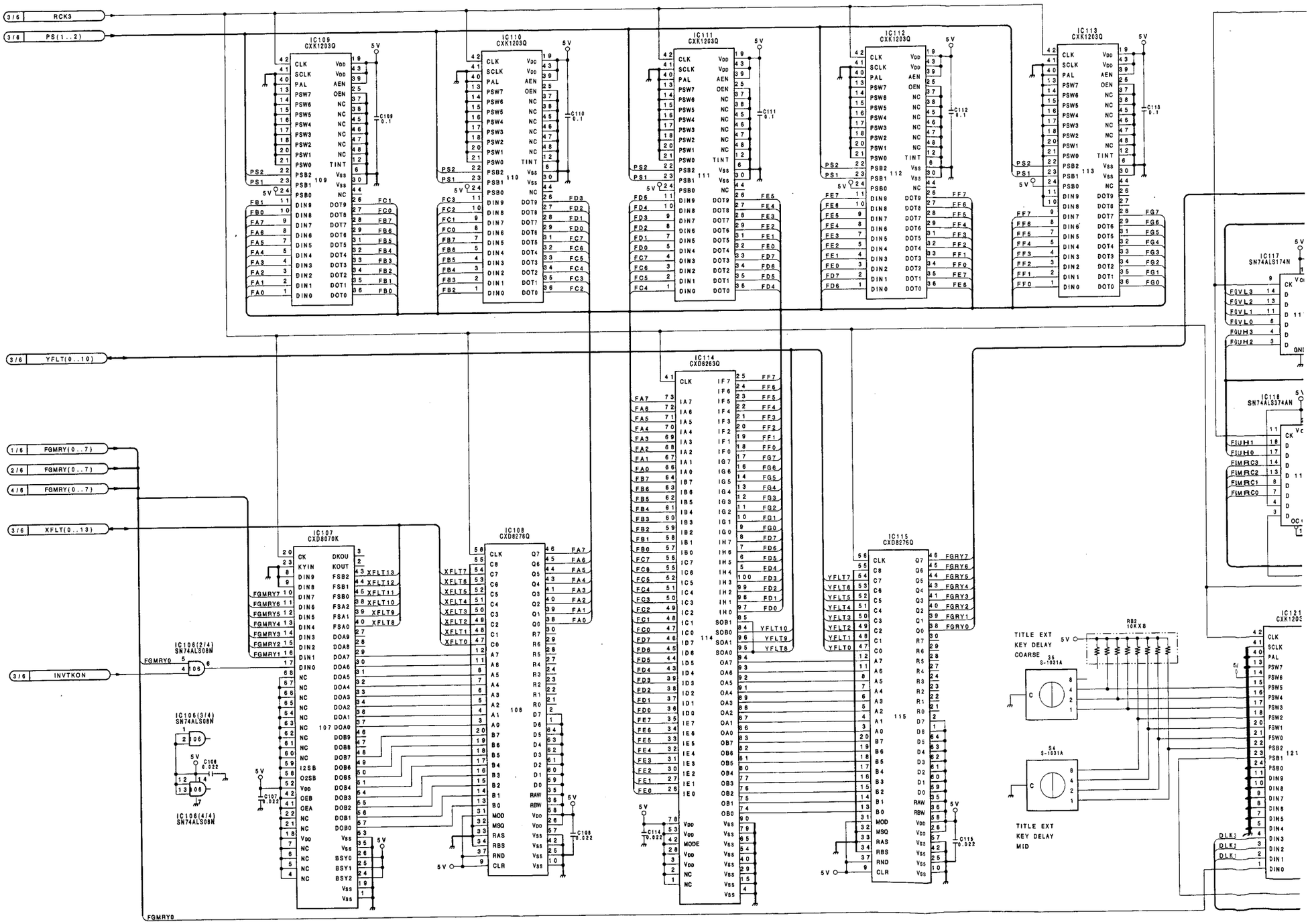

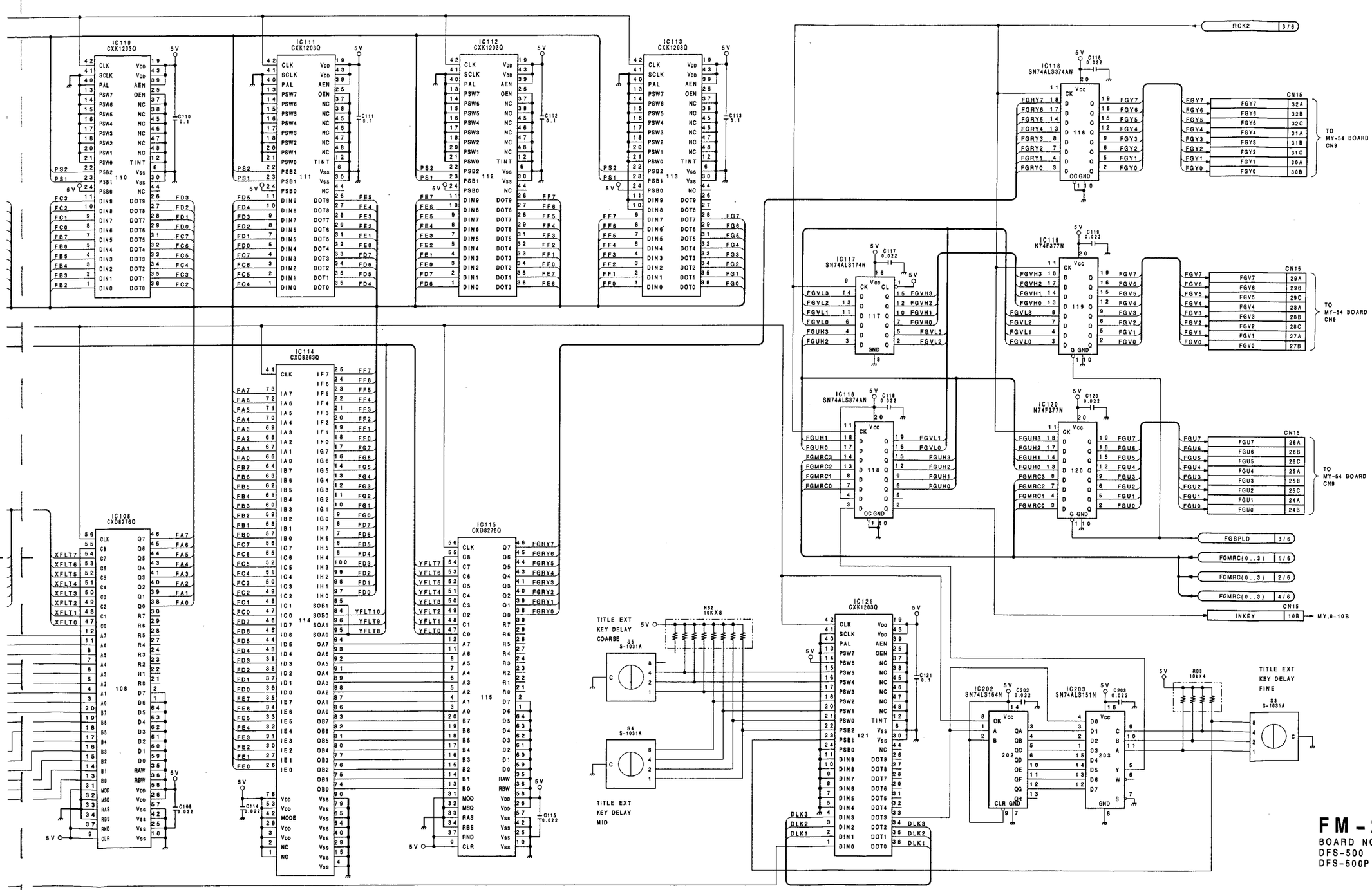

FM-29(6/6) BOARD

BOARD NO.1-644-600-11
DFS-500
DFS-500P

MY-54(1/3);Control Register,Address Counter,Title Key Process

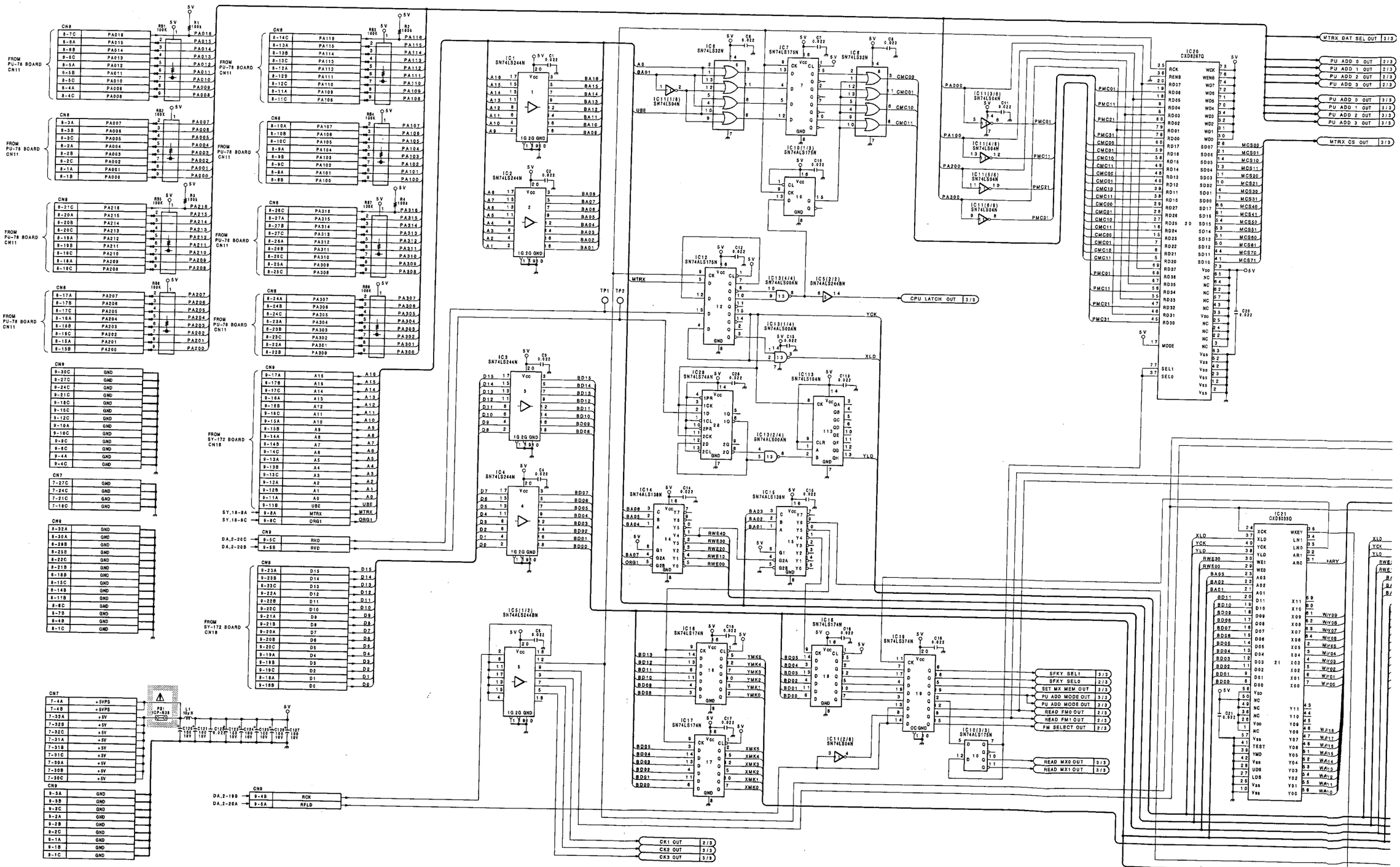

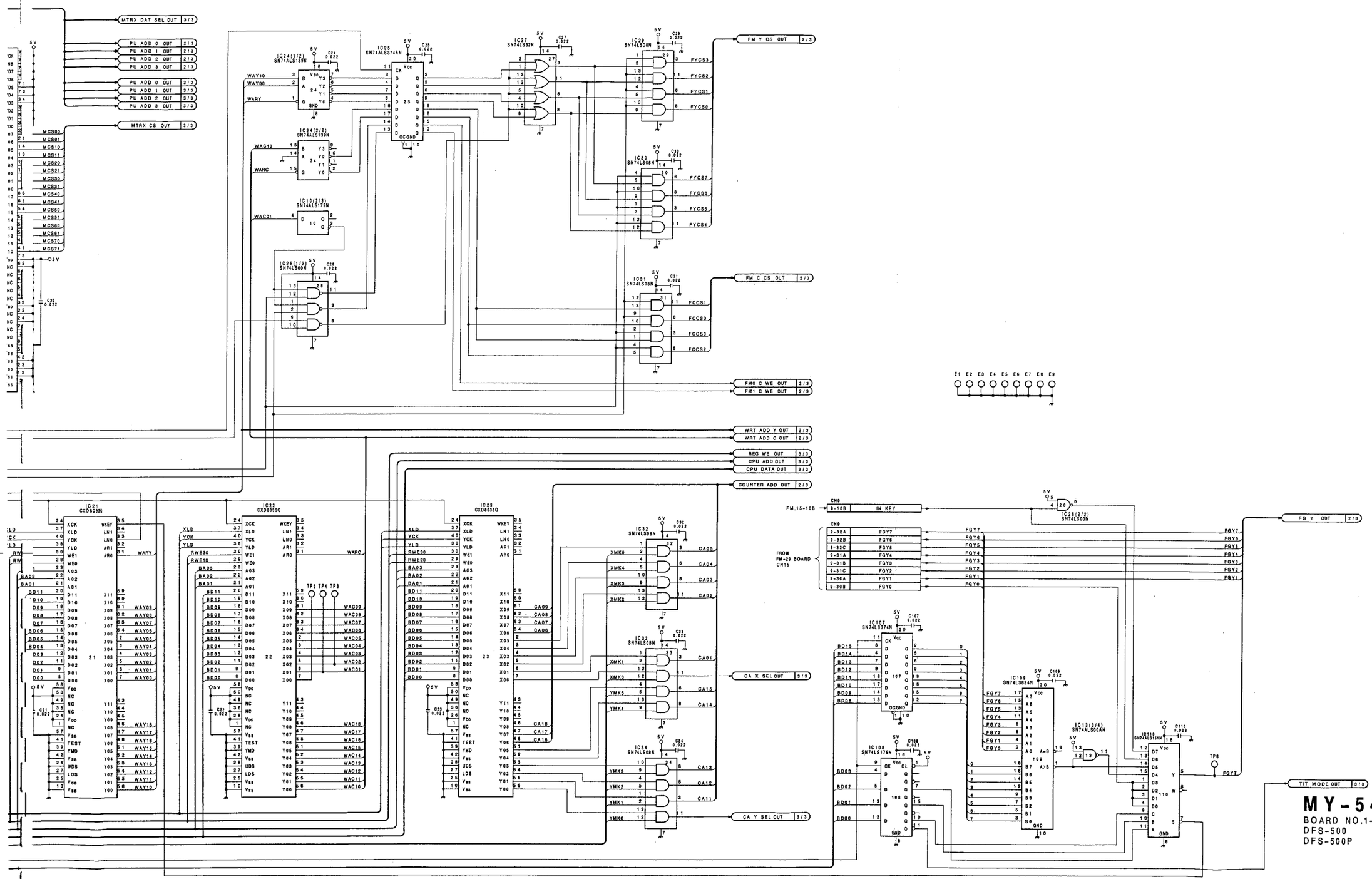

MY-54(1/3) BOARD

BOARD NO.1-644-599-11
DFS-500
DFS-500P

MY-54(2/3);Video Effect Memory

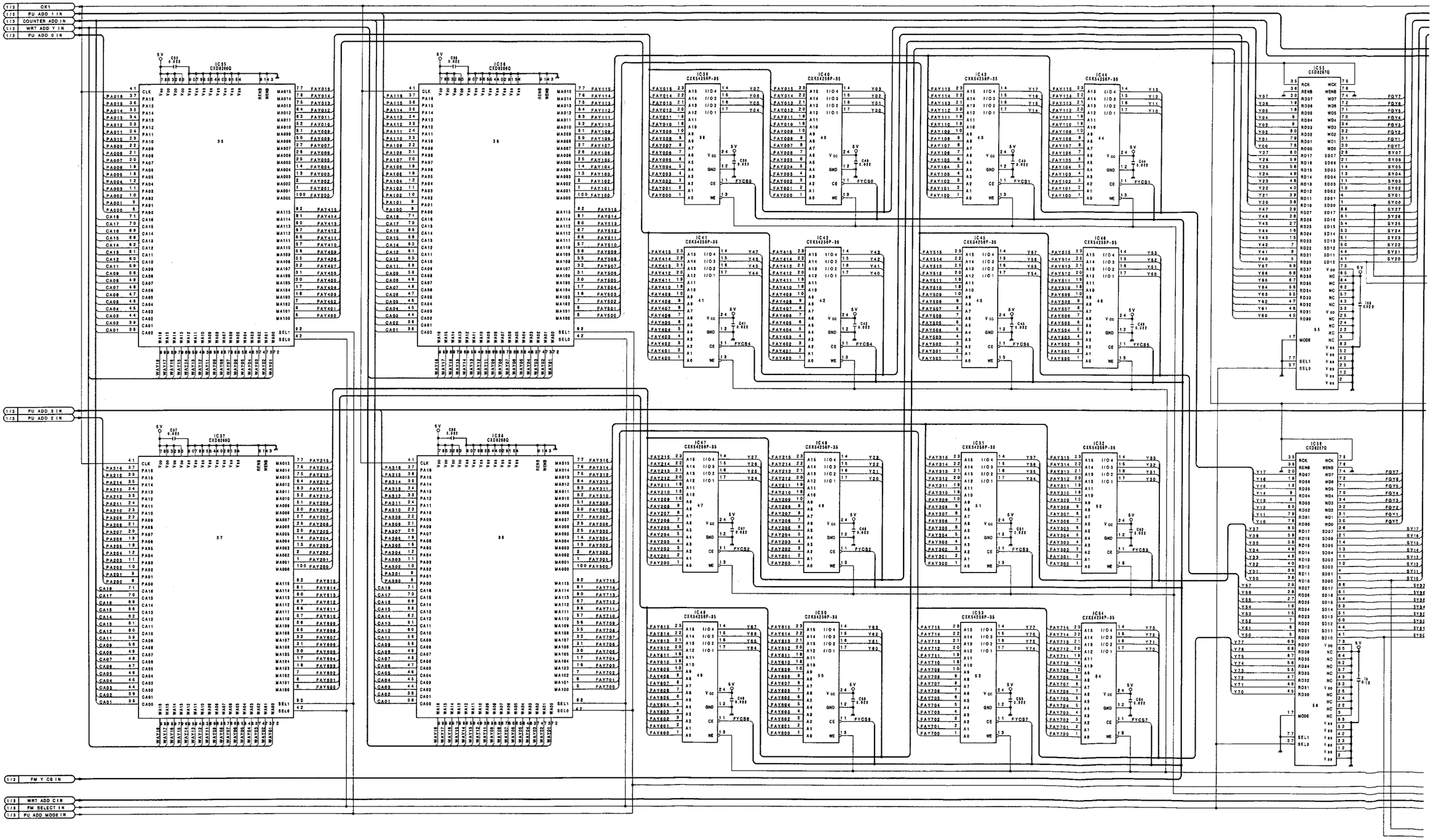

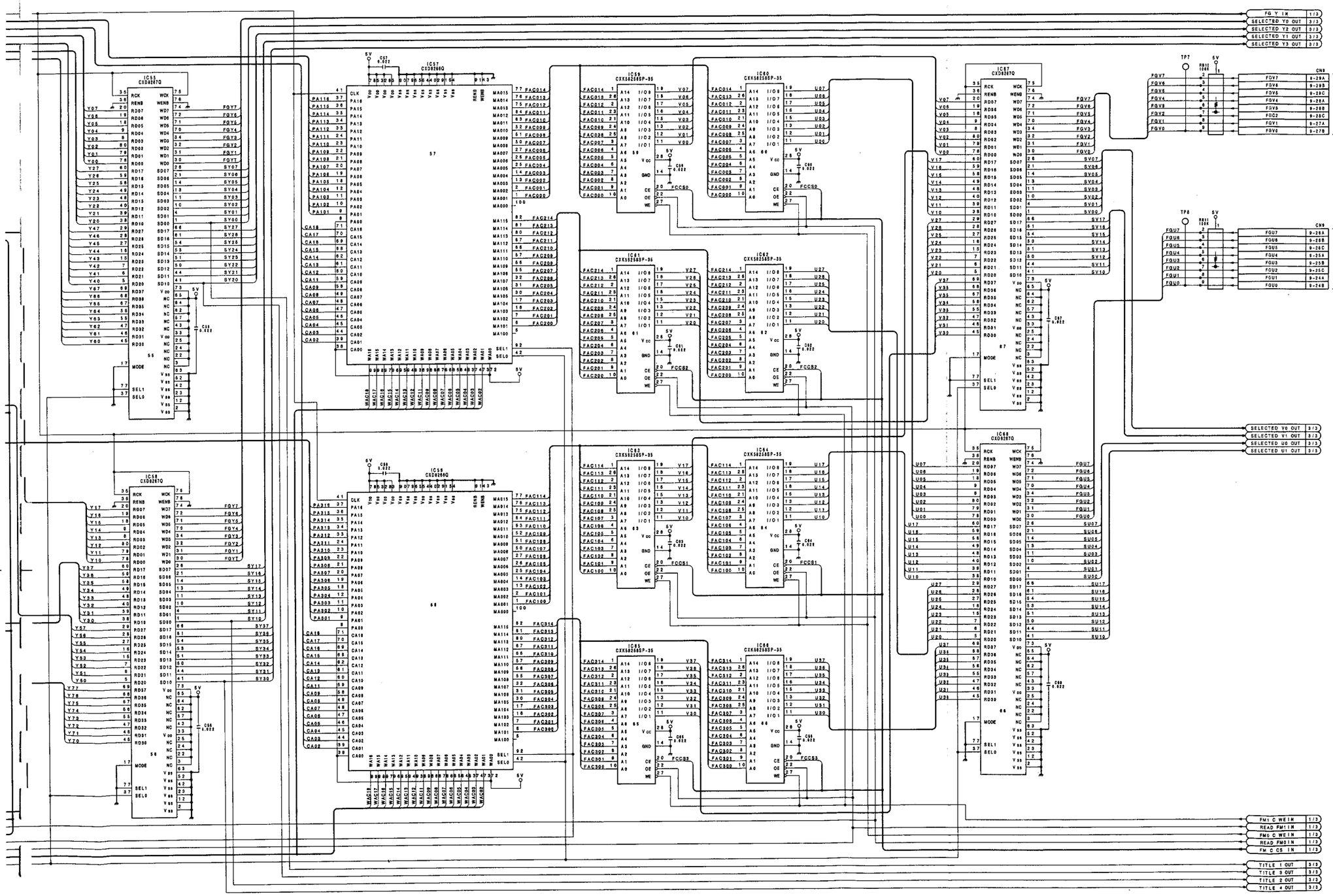

MY-54(2/3) BOARD

BOARD NO.1-644-599-11
DFS-500
DFS-500P

MY-54(3/3);Matrix Memory,Interpolater

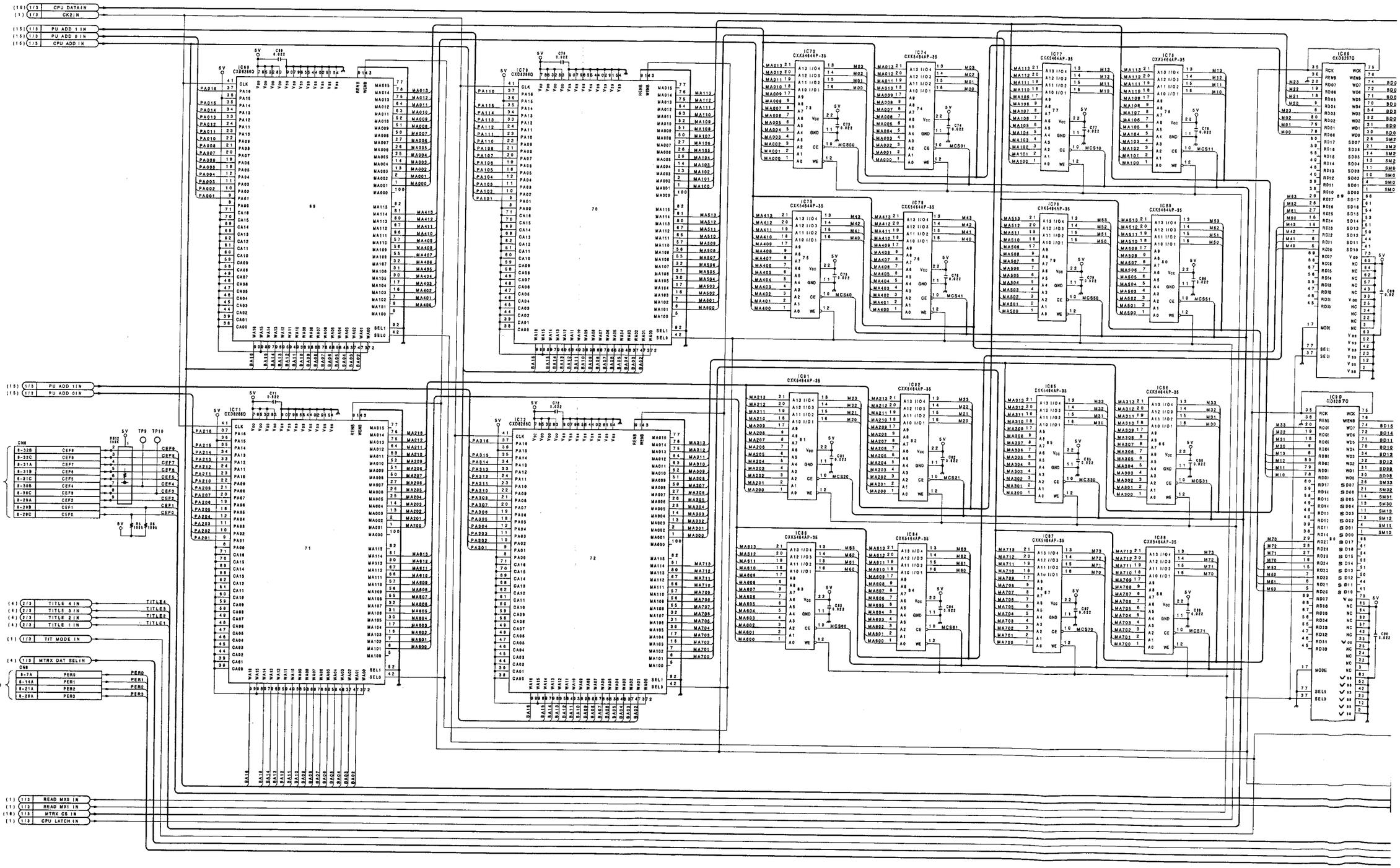

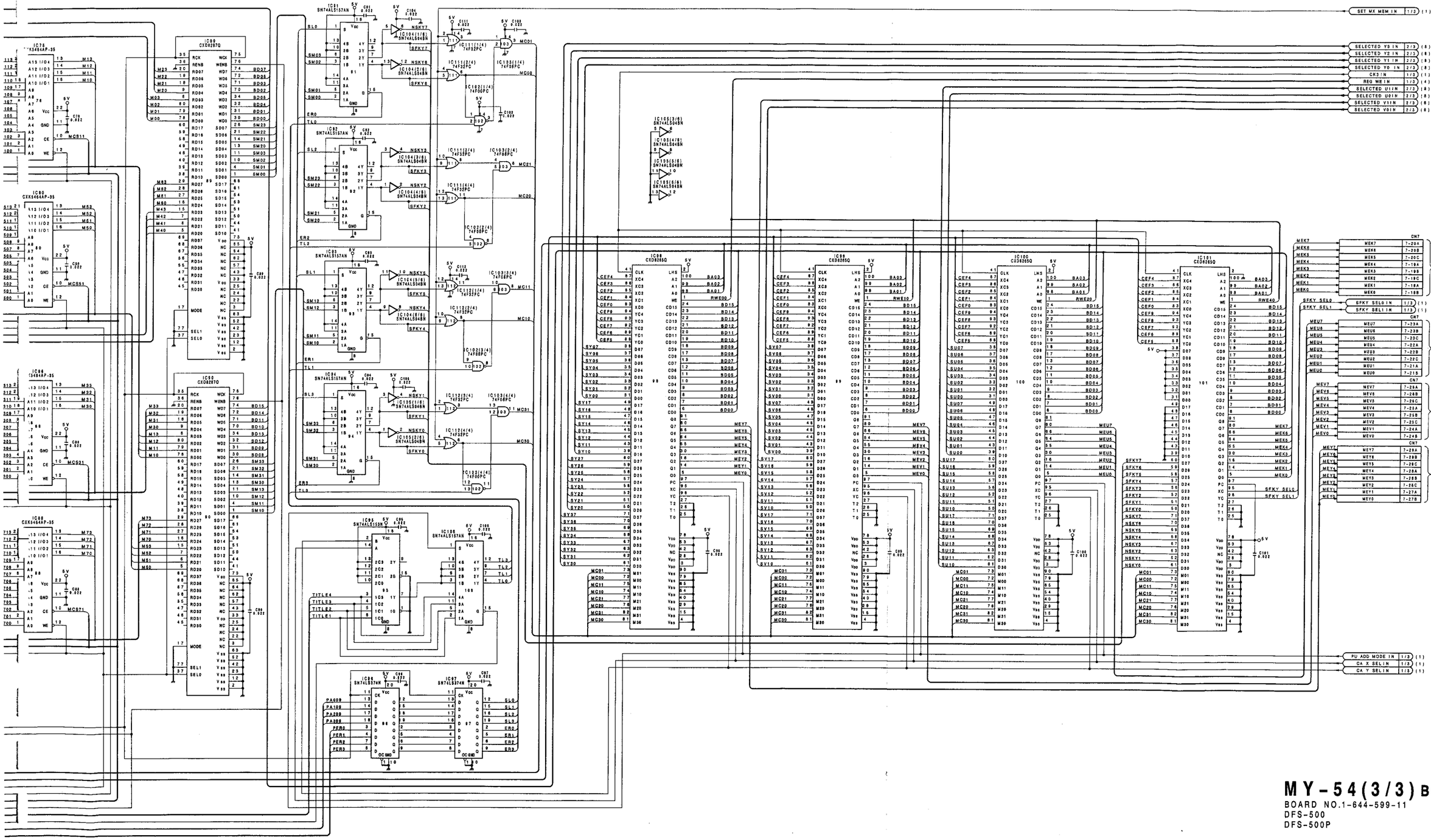

MY-54(3/3) BOARD

BOARD NO.1-644-599-11
DFS-500
DFS-500P

PU-78(1/3);Control Register,Front-End Address Calculator

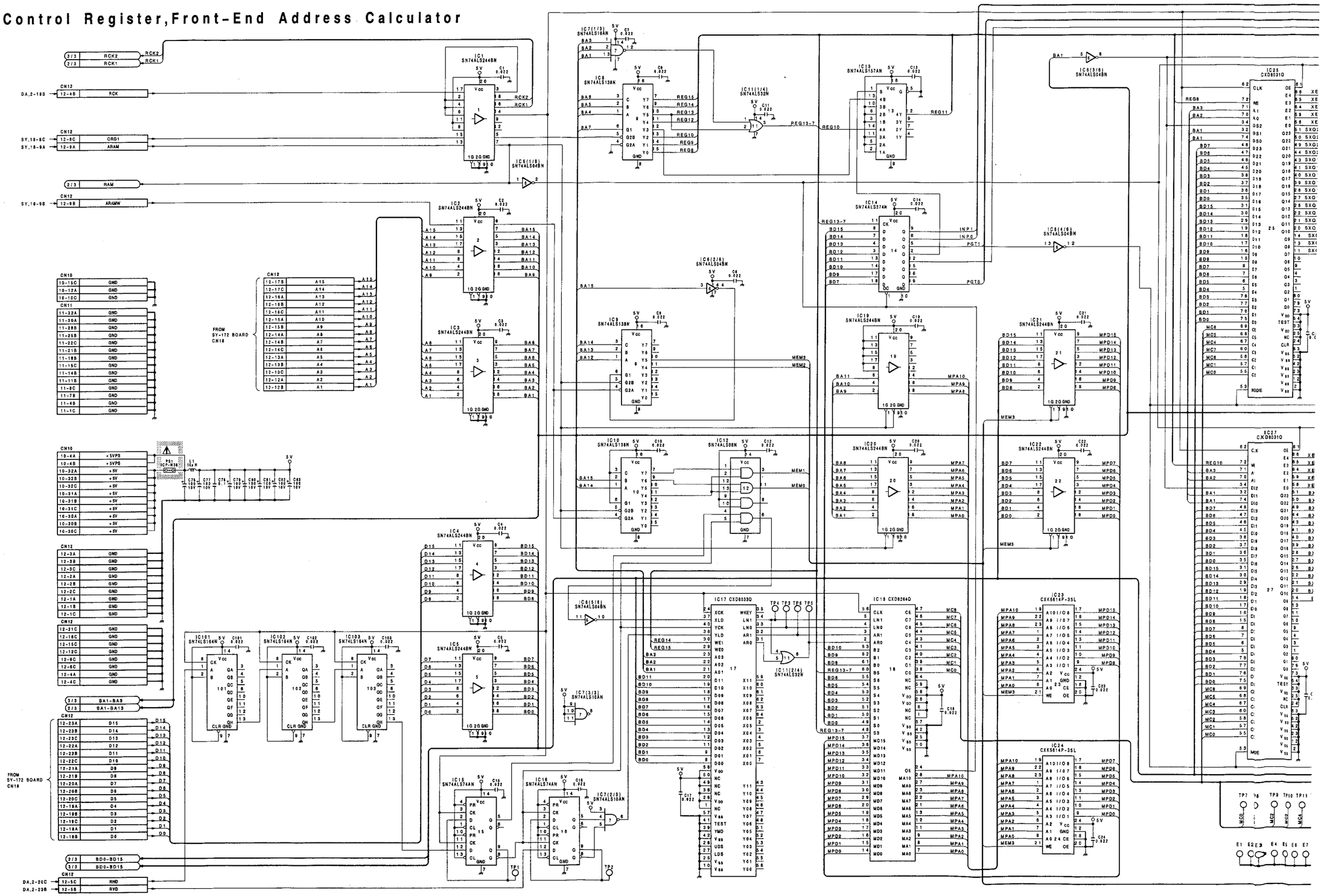

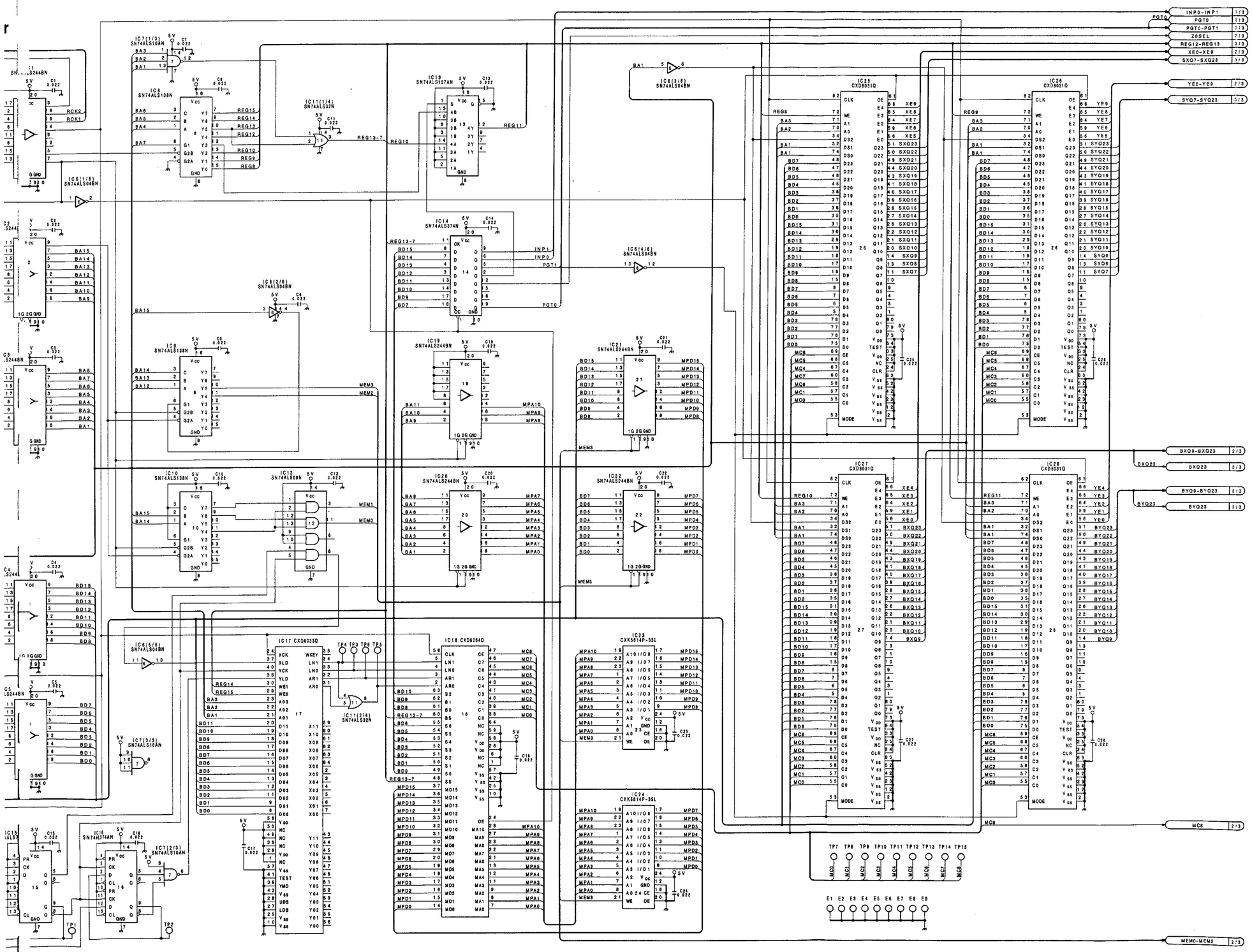

PU-78(1/3) BOARD

BOARD NO.1-644-598-11
DFS-500
DFS-500P

PU-78(2/3);Look Up Table Memory

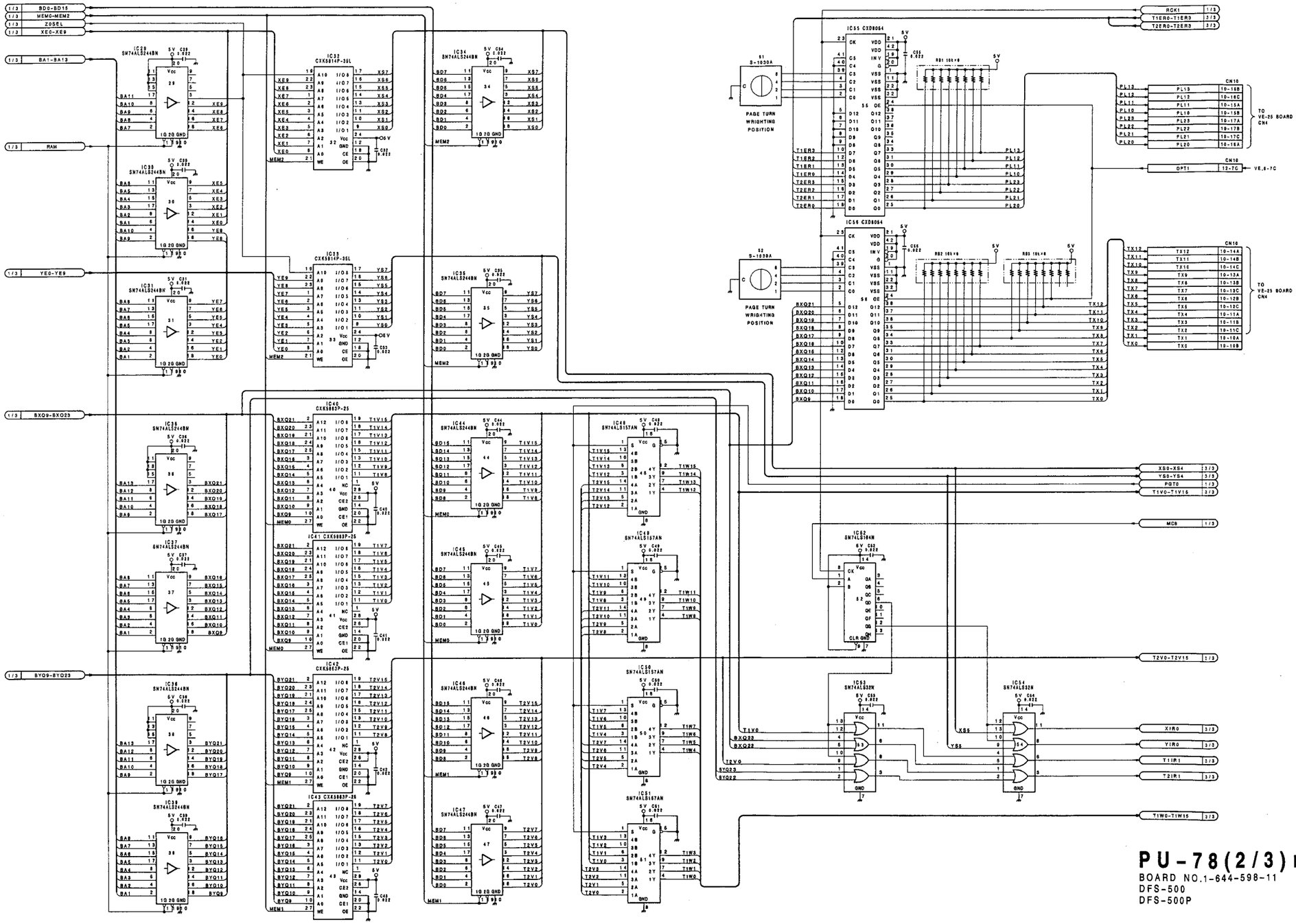

PU-78(2/3) BOARD
BOARD NO.1-644-598-11
DFS-500
DFS-500P

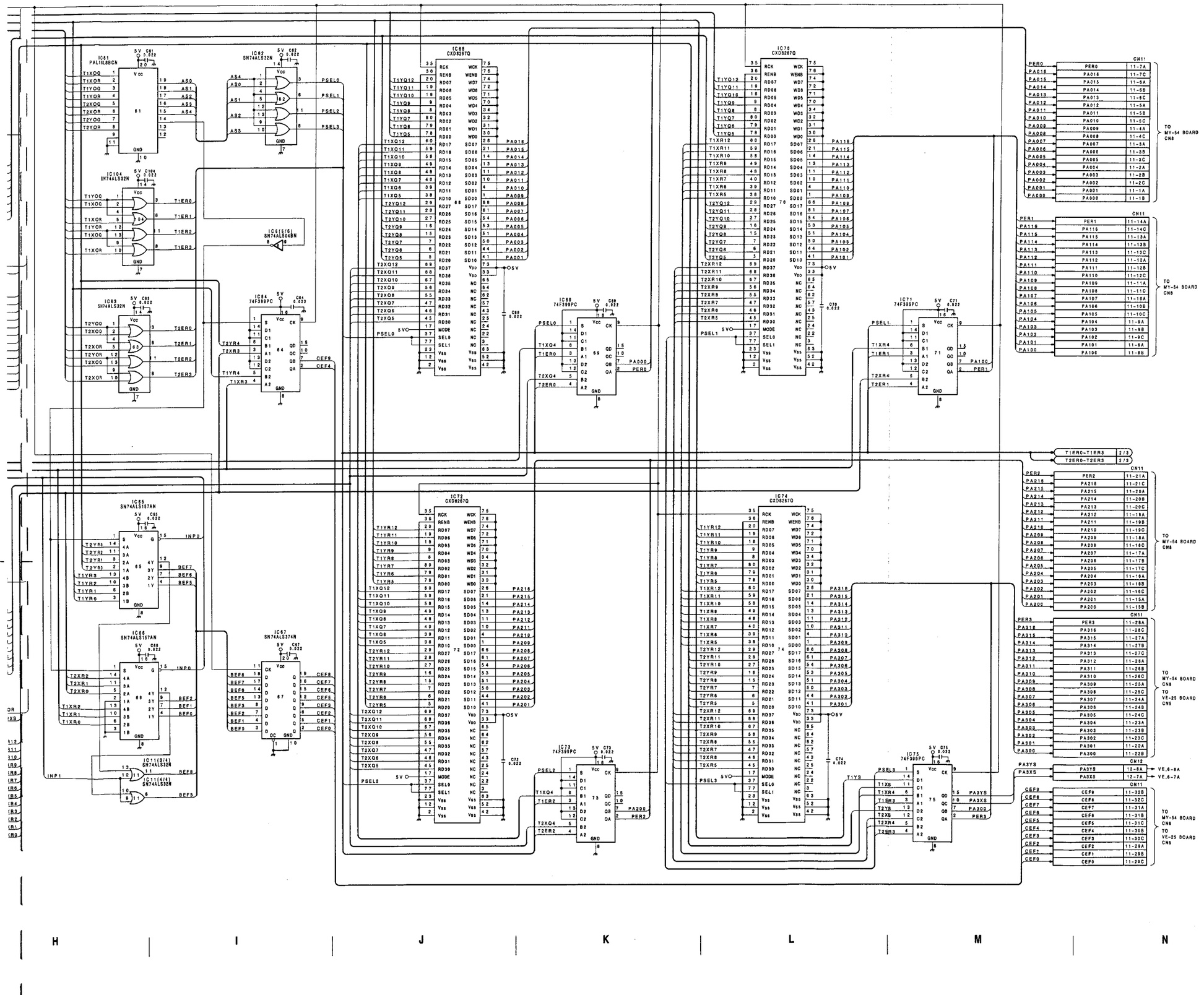

PU-78(3/3) BOARD

BOARD NO.1-644-598-11
DFS-500
DFS-500P

PU-78(3/3);Back-End Address Calculator

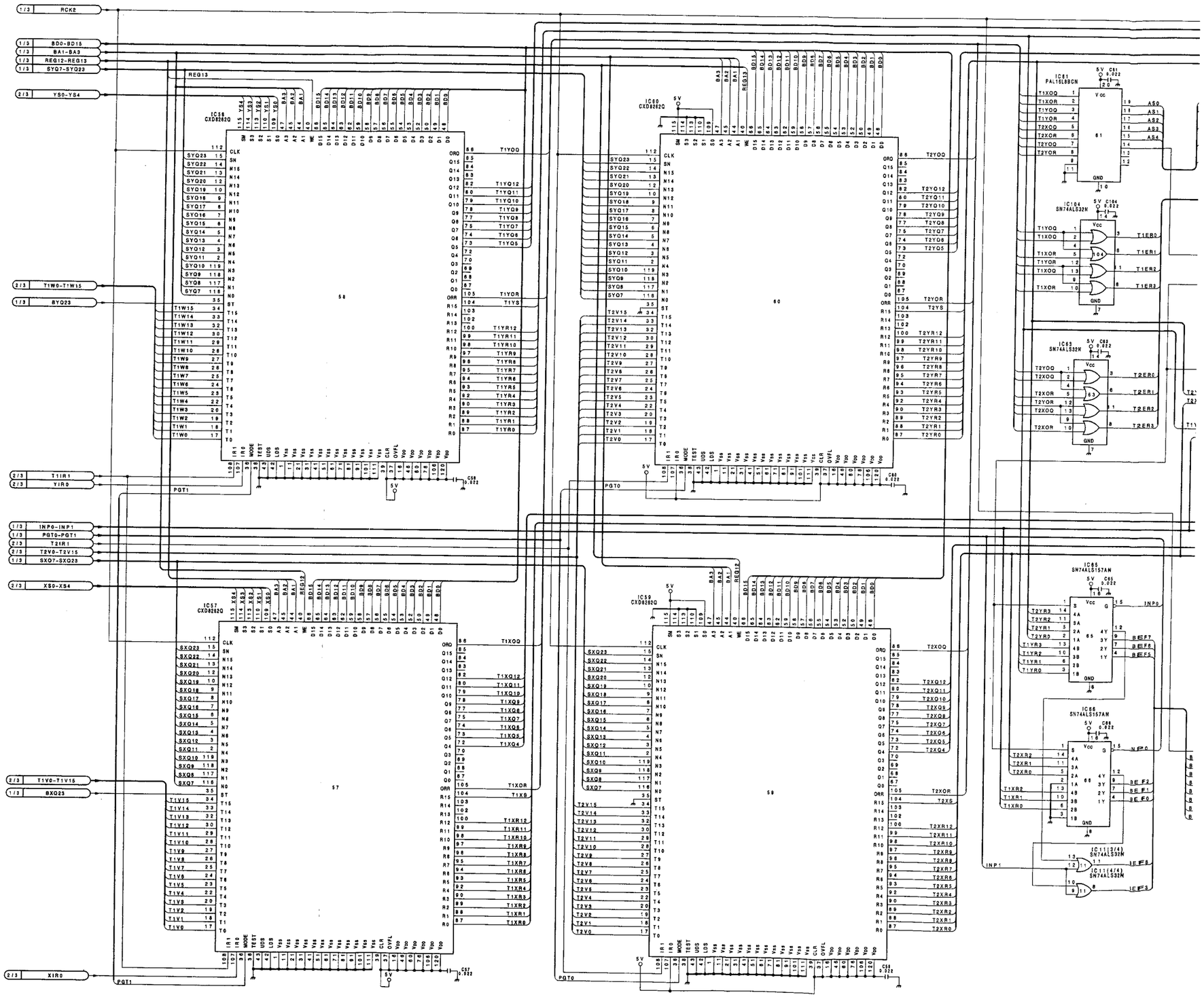

DA-63(1/5);SYNC Generator

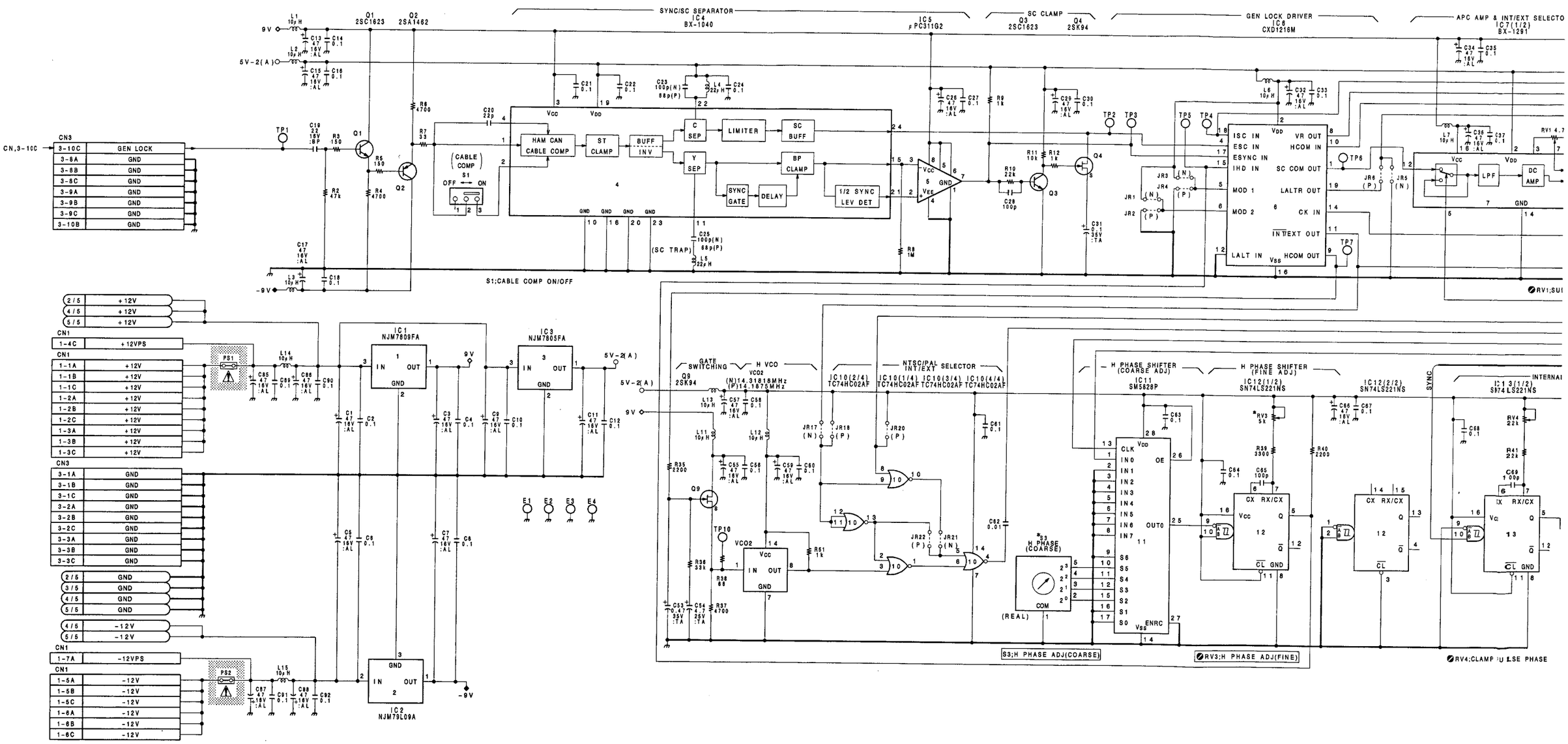

APC AMP & INT/EXT SELECTOR IC7(1/2) BX-1291
SC VCO VCO1 (N)14.31818MHz (P)17.734475MHz
SYNC GENERATOR IC8 CXD1217M
SC PHASE SHIFTER IC9 IB-38
SC 0°/180° SELECTOR IC7(2/2) BX-1291
Q5 2SC1623
SC PHASE TEMP.COMPENSATOR
Q6 2SC2757
Q7 2SA1462
Q8 2SC1623
FL1 (N)3.58MHz (P)4.43MHz
TH1 S300-01
D1 1S2935-T1
D2 1SS123-T1
D3 1SS123-T1
IC20(1/3) MC14053BF
IC20(2/3) MC14053BF
IC20(3/3) MC14053BF
IC17(1/6) TC4584BF
IC17(3/6) TC4584BF
IC17(2/6) TC4584BF
IC17(4/6) TC4584BF
IC17(6/6) TC4584BF
IC17(5/6) TC4584BF
IC18(1/6) TC4584BF
IC18(2/6) TC4584BF
IC18(3/6) TC4584BF
IC18(4/6) TC4584BF
IC18(5/6) TC4584BF
IC18(6/6) TC4584BF
IC19 SN74ALS244BNS
IC12(2/2) SN74LS221NS
IC13(1/2) SN74LS221NS
IC13(2/2) SN74LS221NS
INTERNAL CLAMP GENERATOR
IC14 SN74HC574ANS
IC15 SN74HC574ANS
IC16 SN74HC574ANS
Q10 2SA812
Q11 2SA812
D4 LN28RP

RV1;SUB CARRIER FREQ ADJ
JR7;N ONLY
RV10;INT SC PHASE
RV2;GEN LOCK SC PHASE ADJ
S2;SC PHASE 0°/180° SELECT
LED ON: GEN LOCK
RV4;CLAMP PULSE PHASE
RV5;CLAMP PULSE WIDTH
RV6;BLKG WIDTH
RV7;BLKG PHASE
RV8;BURST WIDTH
RV9;BURST PHASE

SC	3/5
LALT	3/5
BLKG	2/5
BF	3/5
CLAMP	3/5
SYNC	3/5
CN40 INT CLAMP	40-37 → DK,40-37
CN2 RHD	2-20C → VE,MY,FM,PU
CN2 RVD	2-20B → VE,MY,FM,PU
CN2 RFLD	2-20A → VE,MY,FM,SY
CN2 RCK	2-19B → VE,MY,PU,FM
CN2 GND	2-19A
CN2 GND	2-19C
CN2 GND	2-21C
RCK 1	2/5
RCK 2	2/5
CN40 RHD	40-49
CN40 RVD	40-48
CN40 RCK	40-50
→ TO DK-5 BOARD CN40	
CN1 REF SYNC	1-7C → AD,19-7C
CN1 GND	1-7B

DA-63(1/5) BOARD

BOARD NO.1-644-601-11
DFS-500
DFS-500P

DA-63(2/5);Digital M/E & D/A Converter

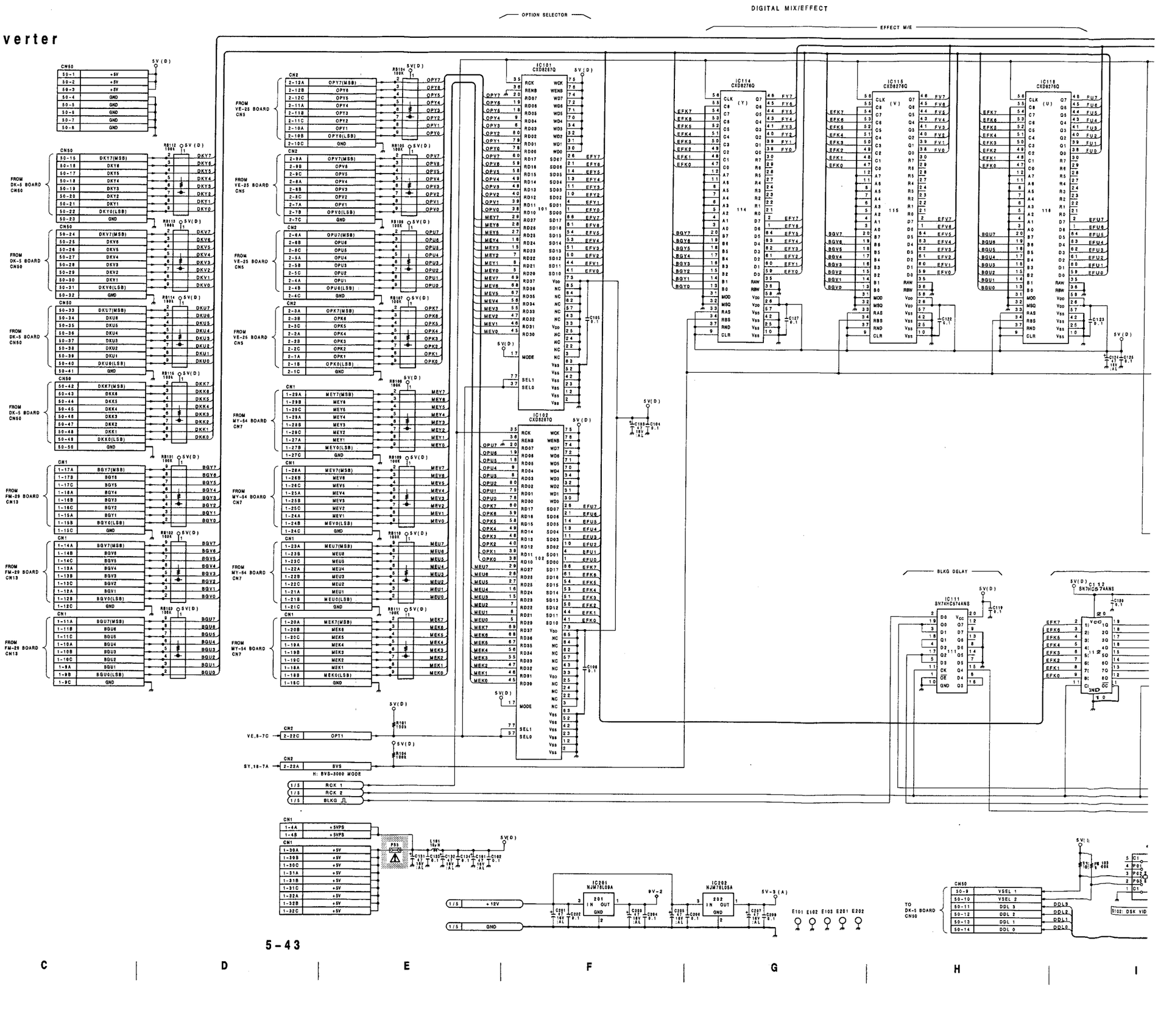

DA-63(2/5) PROCESS UNIT

D/A CONVERTER

DSK M/E

BLANKING ADD

D/A CONVERTER

2CK DELAY(Y)

BLKG DELAY

KEY DELAY

S101: KEY OUT DELAY ADJ

S102: DSK VIDEO FORMAT SELECT

S103: DSK EXT KEY DELAY ADJ

DA-63(2/5) BOARD

BOARD NO.1-644-601-11
DFS-500
DFS-500P

DA-63(3/5);PGM Out(Composite,S) Processor & B.B Generator

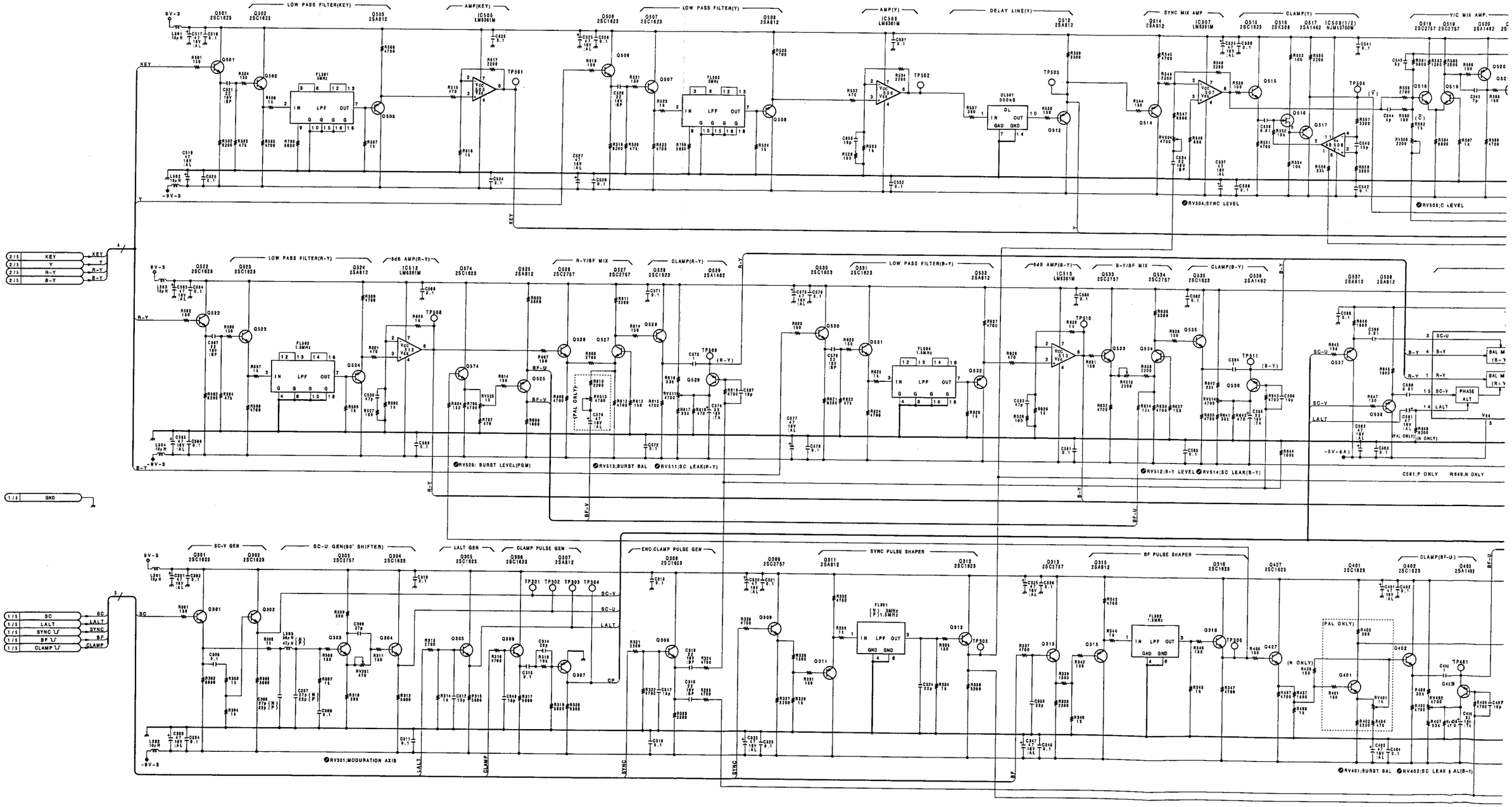

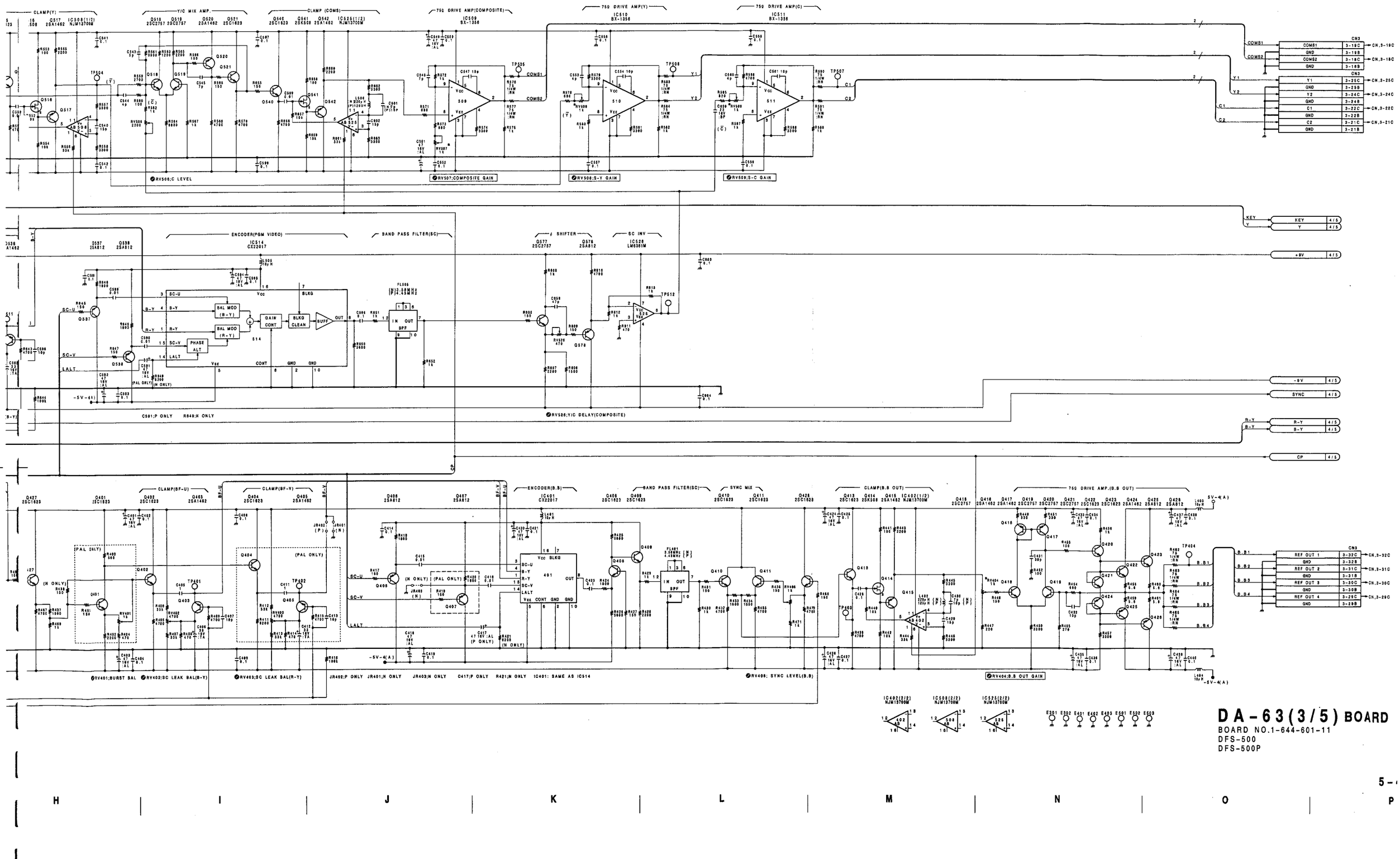

DA-63(3/5) BOARD

BOARD NO.1-644-601-11
DFS-500
DFS-500P

DA-63(4/5);PGM Out(Component) & Key Out PRO

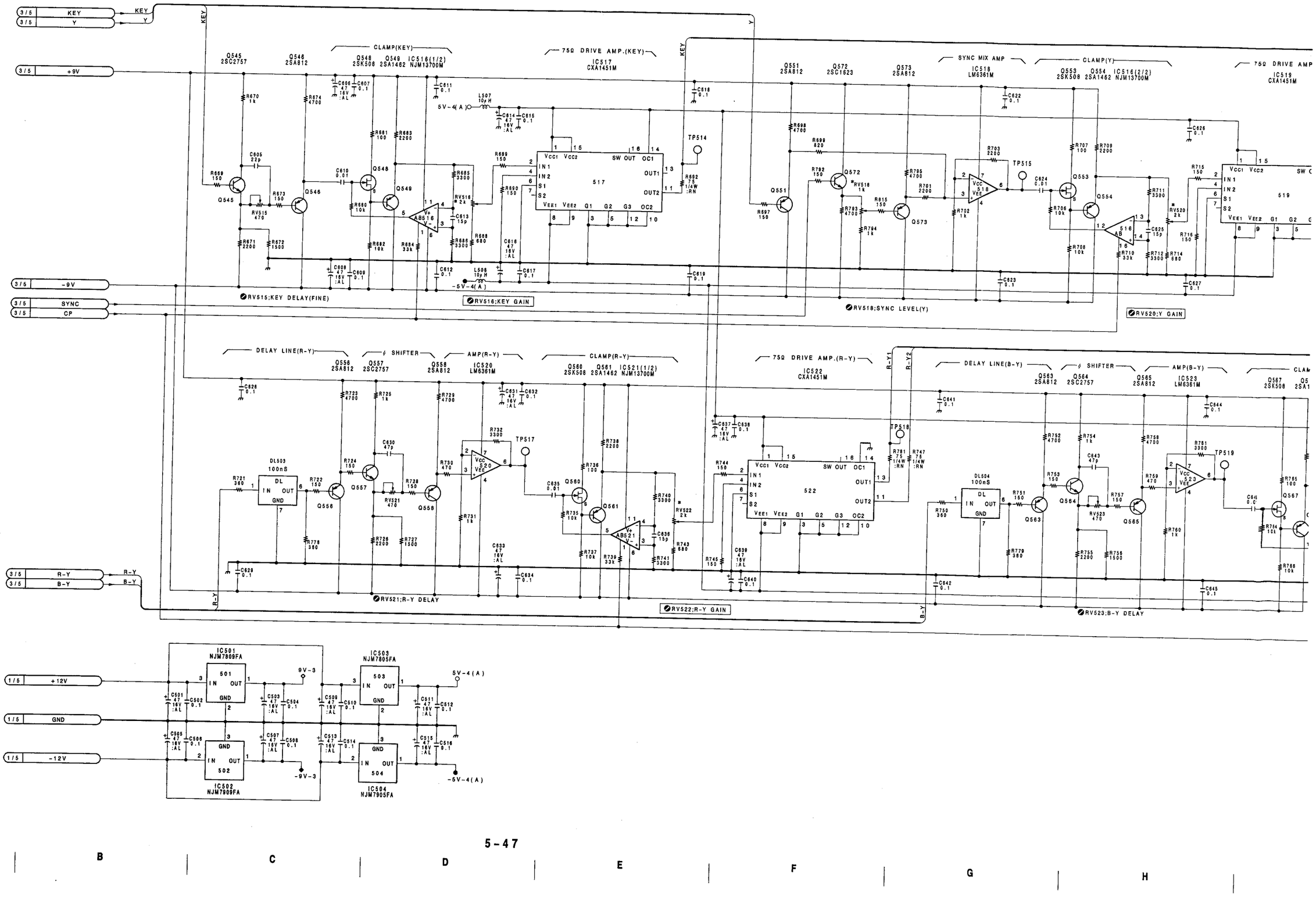

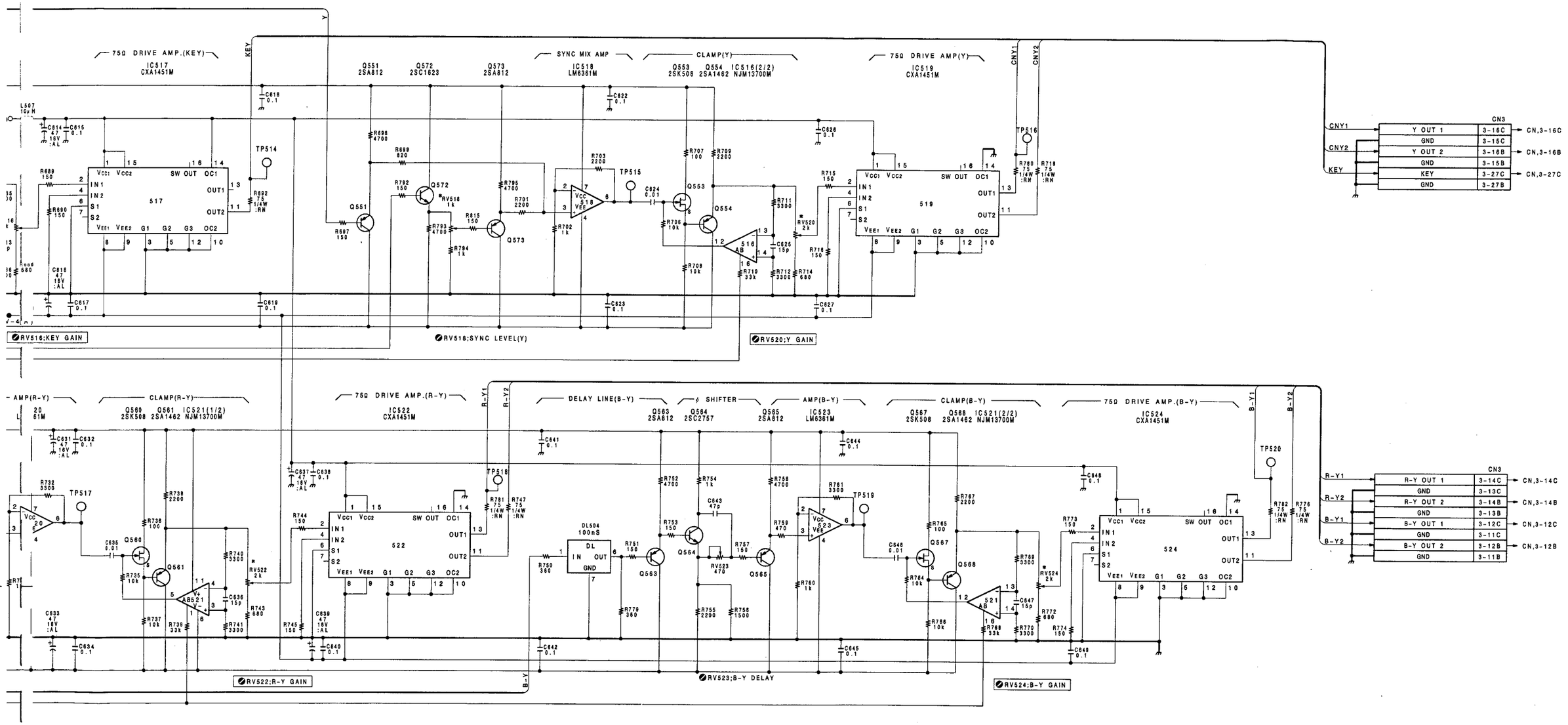

DA-63(4/5) BOARD

BOARD NO.1-644-601-11
DFS-500
DFS-500P

DA-63(5/5);Address & Data Bus Driver

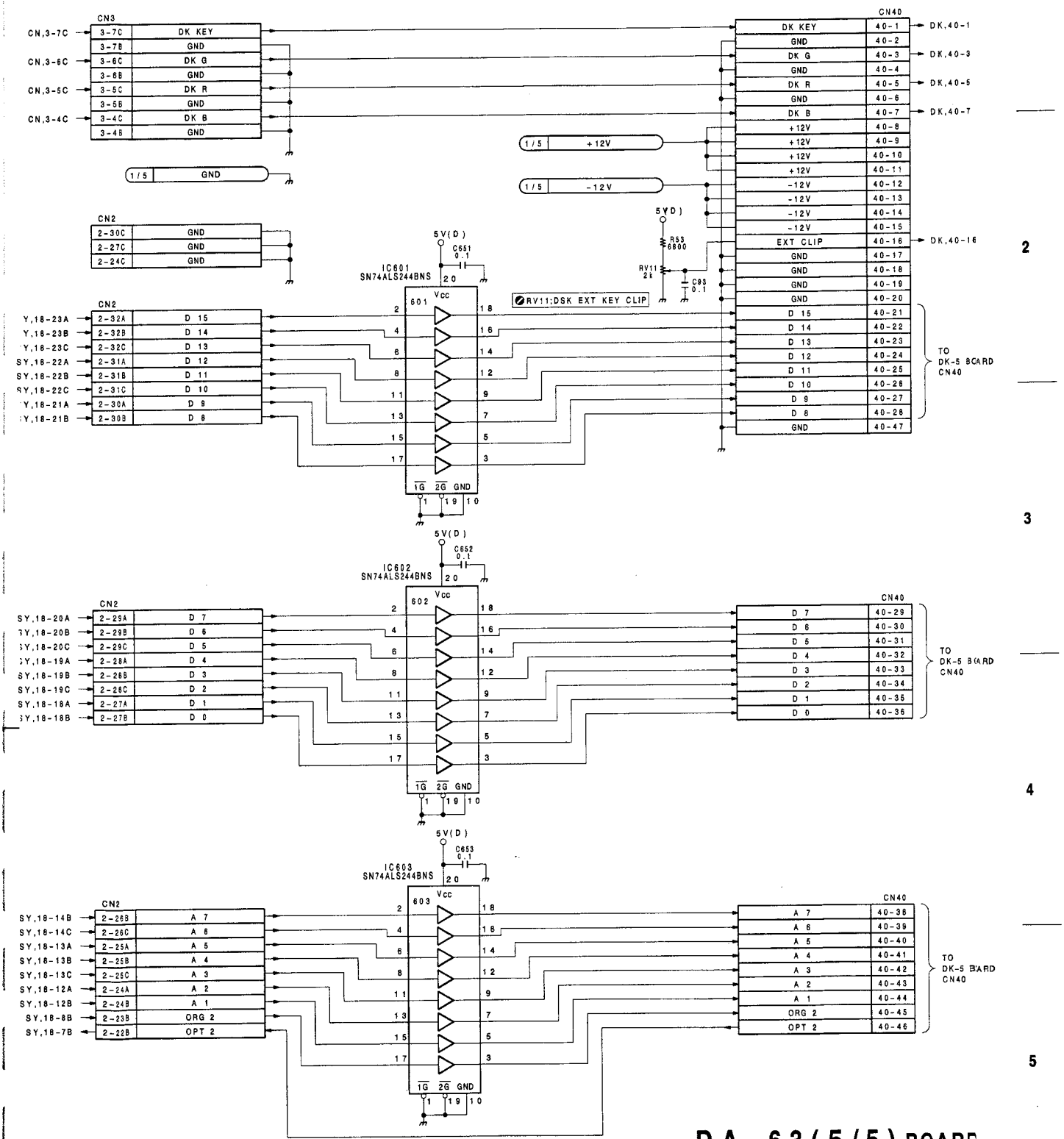

DA-63(5/5) BOARD

BOARD NO.1-644-601-11
DFS-500
DFS-500P

SY-172(1/2);Effect CPU

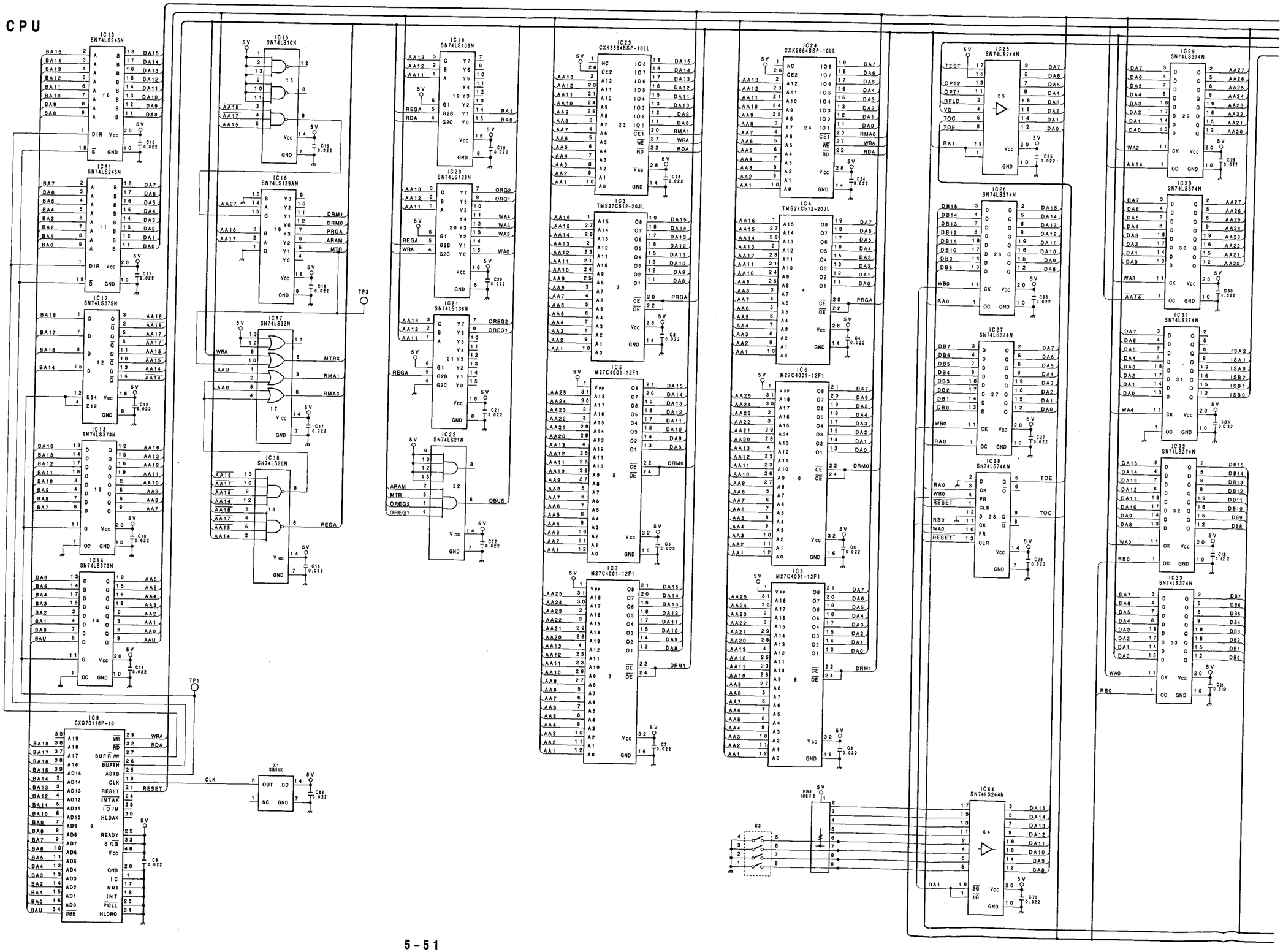

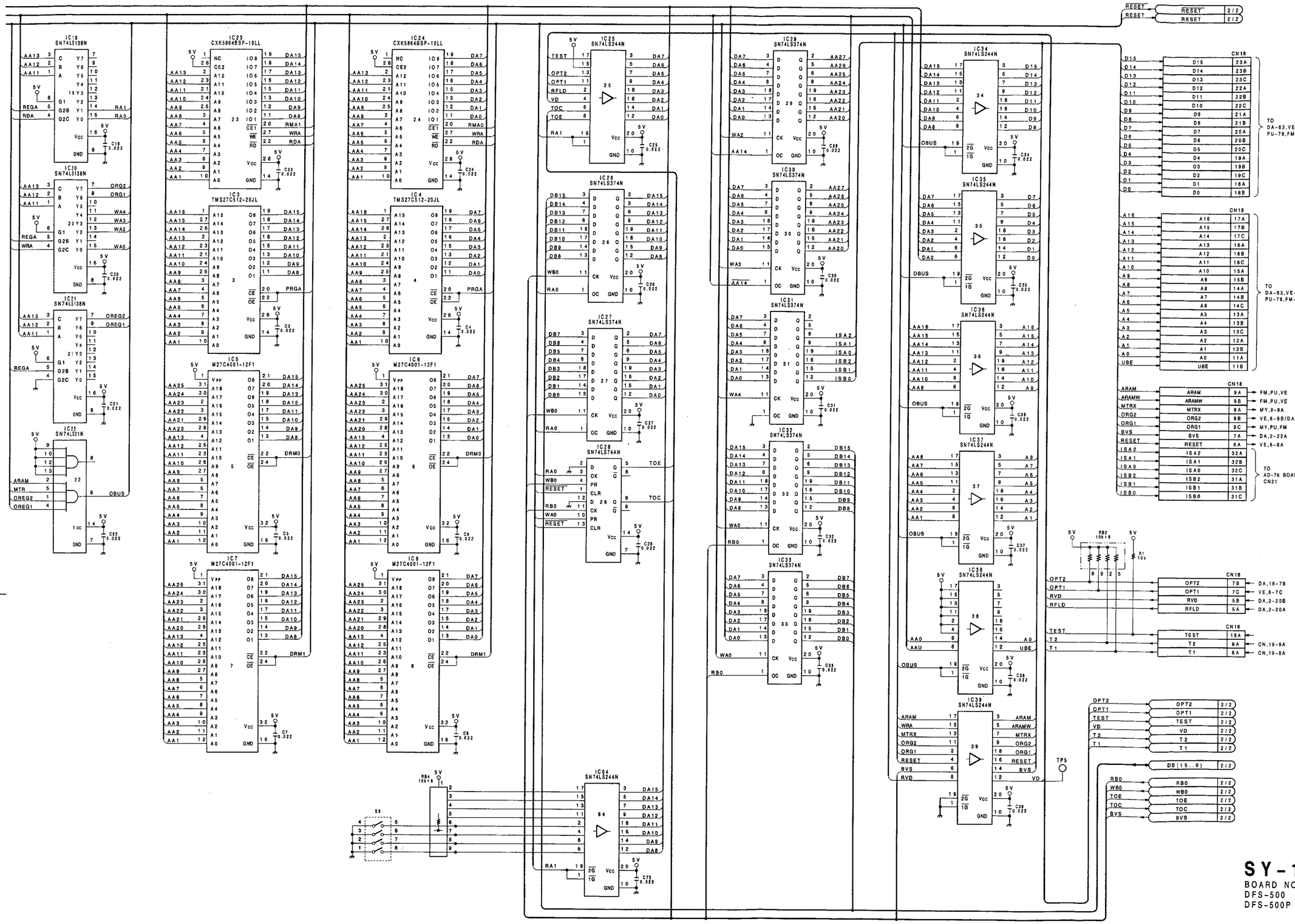

SY-172(1/2) BOARD

BOARD NO.1-644-597-11
DFS-500
DFS-500P

SY-172(2/2);Main CPU

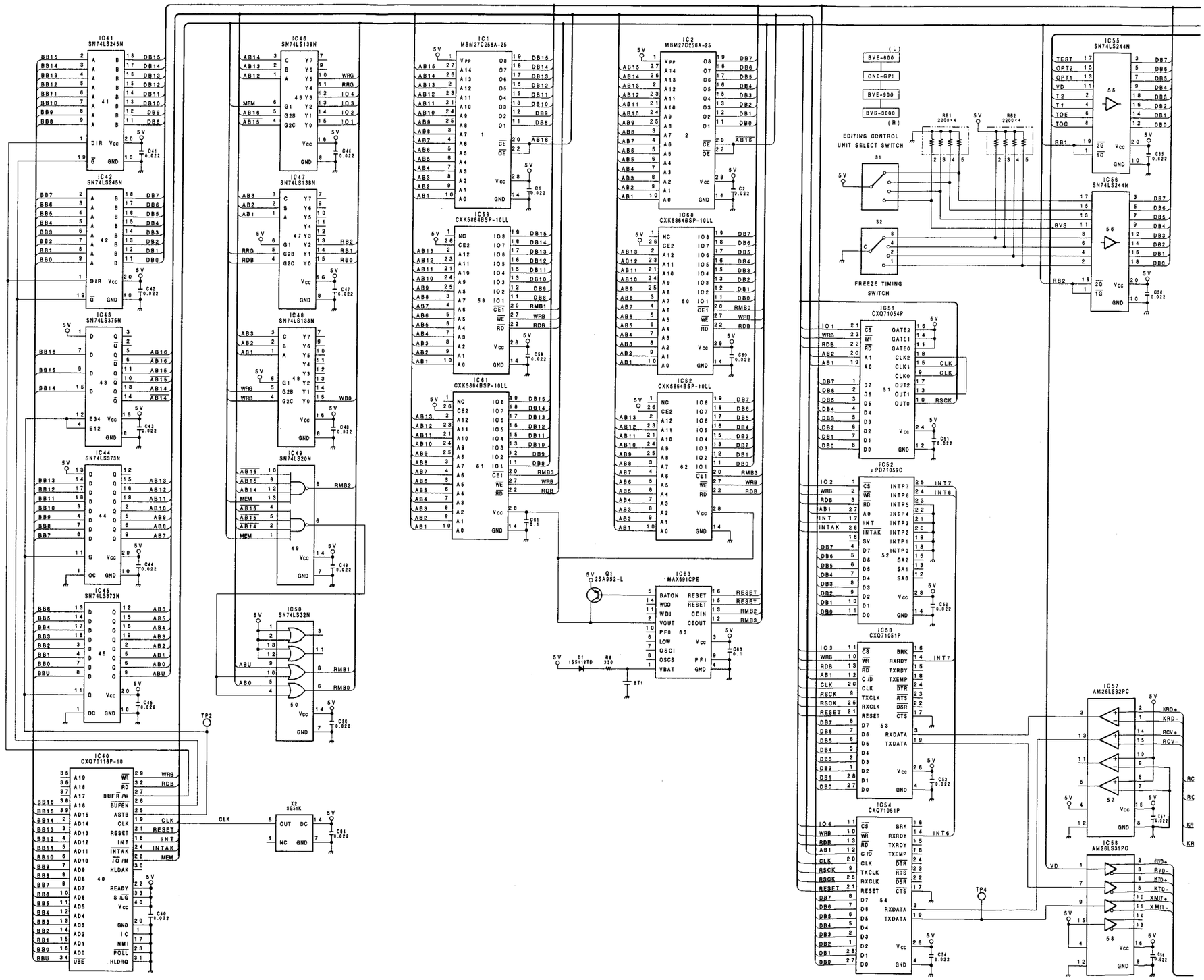

A　B　C　D　E　F　G　H

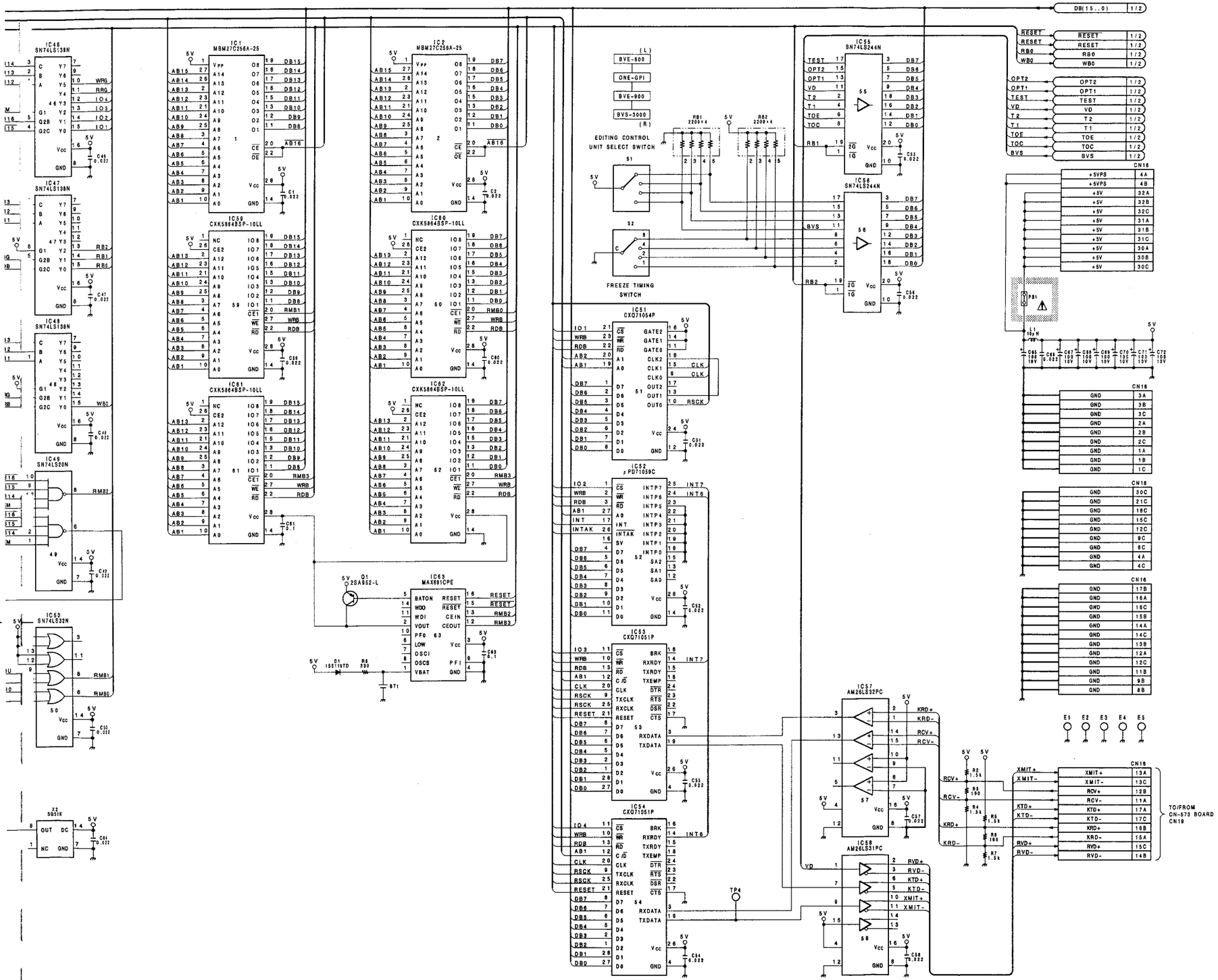

SY-172(2/2) BOARD

BOARD NO.1-644-597-11
DFS-500
DFS-500P

CN-573;Connector Board

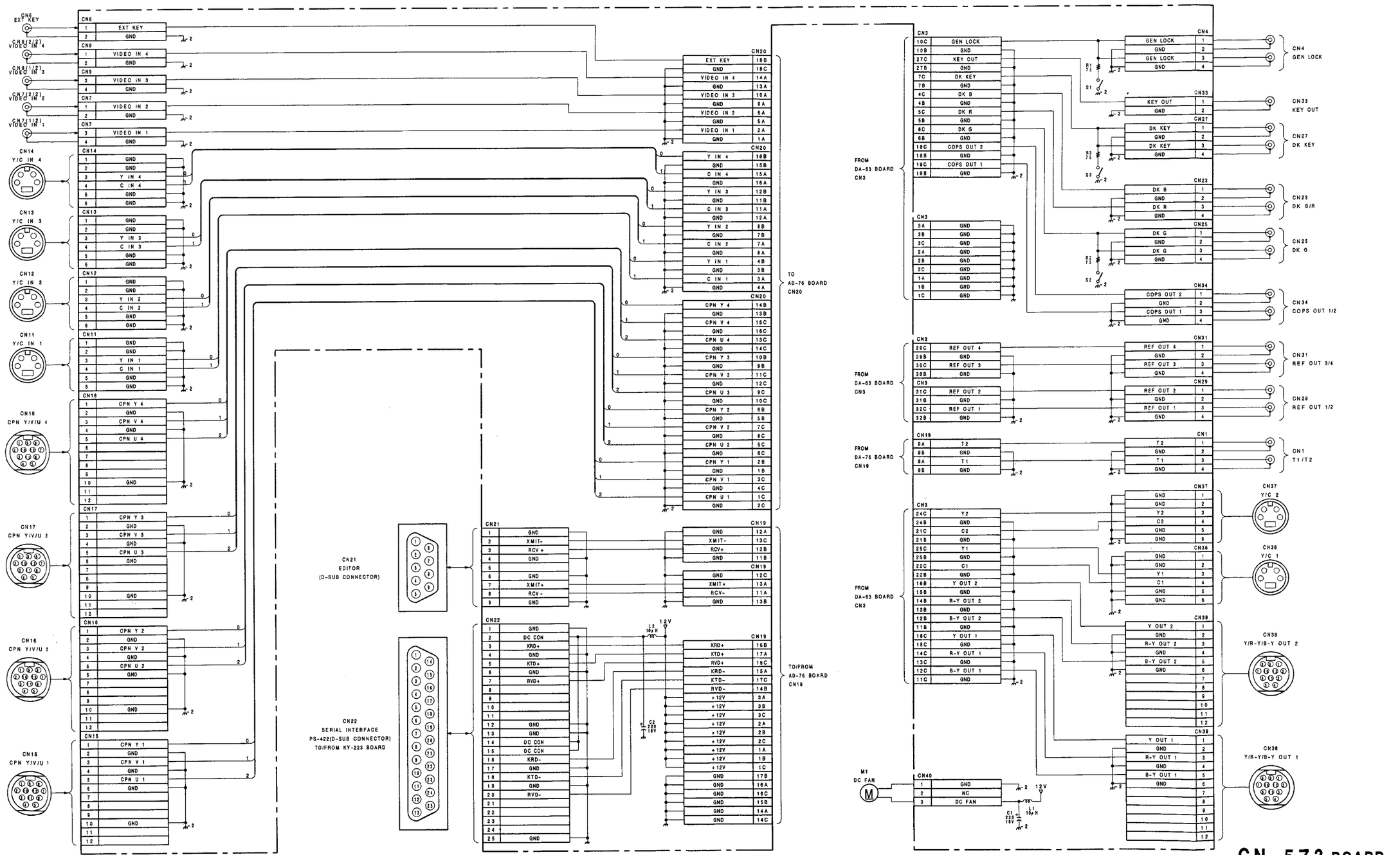

CN-573 BOARD
BOARD NO.1-644-609-11
DFS-500
DFS-500P

5-55

MB-385;Mother Board

DA-63

CN3

	A	B	C
32		GND	REFOUT 1
31		GND	REFOUT 2
30		GND	REFOUT 3
29		GND	REFOUT 4
28			
27		GND	KEY
26			
25		GND	Y1
24		GND	Y2
23			
22		GND	C1
21		GND	C2
20			
19		GND	COPS OUT 1
18		GND	COPS OUT 2
17			
16		Y OUT 2	Y OUT 1
15		GND	GND
14		R-Y OUT 2	R-Y OUT 1
13		GND	GND
12		B-Y OUT 2	B-Y OUT 1
11		GND	GND
10		GND	GEN LOCK
9	GND	GND	GND
8	GND	GND	GND
7		GND	DK KEY
6		GND	DK G
5		GND	DK R
4		GND	DK B
3	GND	GND	GND
2	GND	GND	GND
1	GND	GND	GND

CN2

	A	B	C
32	D 15	D 14	D 13
31	D 12	D 11	D 10
30	D 9	D 8	GND
29	D 7	D 6	D 5
28	D 4	D 3	D 2
27	D 1	D 0	GND
26		A 7	A 6
25	A 5	A 4	A 3
24	A 2	A 1	GND
23		ORG 2	
22	BVS	OPT 2	OPT 1
21			GND
20	RFLD	RVD	RHD
19	GND	RCK	GND
18			
17			
16			
15			
14			
13			GND
12	OPY 7	OPY 6	OPY 5
11	OPY 4	OPY 3	OPY 2
10	OPY 1	OPY 0	GND
9	OPV 7	OPV 6	OPV 5
8	OPV 4	OPV 3	OPV 2
7	OPV 1	OPV 0	GND
6	OPU 7	OPU 6	OPU 5
5	OPU 4	OPU 3	OPU 2
4	OPU 1	OPU 0	GND
3	OPK 7	OPK 6	OPK 5
2	OPK 4	OPK 3	OPK 2
1	OPK 1	OPK 0	GND

VE-25

CN6

	A	B	C
32			
31			
30			
29			
28			
27			
26			
25			
24			
23	D 15	D 14	D 13
22	D 12	D 11	D 10
21	D 9	D 8	GND
20	D 7	D 6	D 5
19	D 4	D 3	D 2
18	D 1	D 0	GND
17		A 15	A 14
16	A 13	A 12	A 11
15	A 10	A 9	GND
14	A 8	A 7	A 6
13	A 5	A 4	A 3
12	A 2	A 1	GND
11			
10			
9	ARAM	ARAMW	GND
8	PA 3YS	ORG 2	
7	PA 3XS	OPT 2	OPT 1
6	RESET		GND
5	RFLD	RVD	RHD
4	GND	RCK	GND
3	GND	GND	GND
2	GND	GND	GND
1	GND	GND	GND

CN5

	A	B	C
32	GND	CEF 9	CEF 8
31			
30	GND	CEF 4	CEF 3
29			
28		GND	PA 316
27	PA 315	PA 314	PA 313
26	PA 312	PA 311	PA 310
25	PA 309	GND	PA 308
24	PA 307	PA 306	PA 305
23	PA 304	PA 303	PA 302
22	PA 301	PA 300	GND
21			
20			
19			
18			
17			
16			
15			
14			
13			GND
12	OPY 7	OPY 6	OPY 5
11	OPY 4	OPY 3	OPY 2
10	OPY 1	OPY 0	GND
9	OPV 7	OPV 6	OPV 5
8	OPV 4	OPV 3	OPV 2
7	OPV 1	OPV 0	GND
6	OPU 7	OPU 6	OPU 5
5	OPU 4	OPU 3	OPU 2
4	OPU 1	OPU 0	GND
3	OPK 7	OPK 6	OPK 5
2	OPK 4	OPK 3	OPK 2
1	OPK 1	OPK 0	GND

MY-54

CN9

	A	B	C
32	FGY 7	FGY 6	FGY 5
31	FGY 4	FGY 3	FGY 2
30	FGY 1	FGY 0	GND
29	FGV 7	FGV 6	FGV 5
28	FGV 4	FGV 3	FGV 2
27	FGV 1	FGV 0	GND
26	FGU 7	FGU 6	FGU 5
25	FGU 4	FGU 3	FGU 2
24	FGU 1	FGU 0	GND
23	D 15	D 14	D 13
22	D 12	D 11	D 10
21	D 9	D 8	GND
20	D 7	D 6	D 5
19	D 4	D 3	D 2
18	D 1	D 0	GND
17	A 18	A 15	A 14
16	A 13	A 12	A 11
15	A 10	A 9	GND
14	A 8	A 7	A 6
13	A 5	A 4	A 3
12	A 2	A 1	GND
11	A 0	UBE	
10	GND	IN KEY	GND
9			GND
8	MTRX		ORG 1
7			
6			GND
5	RFLD	RVD	RHD
4	GND	RCK	GND
3	GND	GND	GND
2	GND	GND	GND
1	GND	GND	GND

CN8

	A	B	C
32	GND	CEF 9	CEF 8
31	CEF 7	CEF 6	CEF 5
30	GND	CEF 4	CEF 3
29	CEF 2	CEF 1	CEF 0
28	PER 3	GND	PA 316
27	PA 315	PA 314	PA 313
26	PA 312	PA 311	PA 310
25	PA 309	GND	PA 308
24	PA 307	PA 306	PA 305
23	PA 304	PA 303	PA 302
22	PA 301	PA 300	GND
21	PER 2	GND	PA 216
20	PA 215	PA 214	PA 213
19	PA 212	PA 211	PA 210
18	PA 209	GND	PA 208
17	PA 207	PA 206	PA 205
16	PA 204	PA 203	PA 202
15	PA 201	PA 200	GND
14	PER 1	GND	PA 116
13	PA 115	PA 114	PA 113
12	PA 112	PA 111	PA 110
11	PA 109	GND	PA 108
10	PA 107	PA 106	PA 105
9	PA 104	PA 103	PA 102
8	PA 101	PA 100	GND
7	PER 0	GND	PA 016
6	PA 015	PA 014	PA 013
5	PA 012	PA 011	PA 010
4	PA 009	GND	PA 008
3	PA 007	PA 006	PA 005
2	PA 004	PA 003	PA 002
1	PA 001	PA 000	GND

CN7

	A	B	C
32	+5V	+5V	+5V
31	+5V	+5V	+5V
30	+5V	+5V	+5V
29	MEY 7	MEY 6	MEY 5
28	MEY 4	MEY 3	MEY 2
27	MEY 1	MEY 0	GND
26	MEV 7	MEV 6	MEV 5
25	MEV 4	MEV 3	MEV 2
24	MEV 1	MEV 0	GND
23	MEU 7	MEU 6	MEU 5
22	MEU 4	MEU 3	MEU 2
21	MEU 1	MEU 0	GND
20	MEK 7	MEK 6	MEK 5
19	MEK 4	MEK 3	MEK 2
18	MEK 1	MEK 0	GND
17			
16			
15			
14			
13			
12			
11			
10			
9			
8			
7	NC(-12VPS)		
6	-12V	-12V	-12V
5	-12V	-12V	-12V
4	NC(+5VPS)	NC(+5VPS)	NC(+12VPS)
3	+12V	+12V	+12V
2	+12V	+12V	+12V
1	+12V	+12V	+12V

PU-78

CN12

	A	B	C
32			
31			
30			
29			
28			
27			
26			
25			
24			
23	D 15	D 14	D 13
22	D 12	D 11	D 10
21	D 9	D 8	GND
20	D 7	D 6	D 5
19	D 4	D 3	D 2
18	D 1	D 0	GND
17	A 16	A 15	A 14
16	A 13	A 12	A 11
15	A 10	A 9	GND
14	A 8	A 7	A 6
13	A 5	A 4	A 3
12	A 2	A 1	GND
11			
10			
9	ARAM	ARAMW	GND
8	PA 3YS		ORG 1
7	PA 3XS		OPT 1
6			GND
5		RVD	RHD
4	GND	RCK	GND
3	GND	GND	GND
2	GND	GND	GND
1	GND	GND	GND

CN11

	A	B	C
32	GND	CEF 9	CEF 8
31	CEF 7	CEF 6	CEF 5
30	GND	CEF 4	CEF 3
29	CEF 2	CEF 1	CEF 0
28	PER 3	GND	PA 316
27	PA 315	PA 314	PA 313
26	PA 312	PA 311	PA 310
25	PA 309	GND	PA 308
24	PA 307	PA 306	PA 305
23	PA 304	PA 303	PA 302
22	PA 301	PA 300	GND
21	PER 2	GND	PA 216
20	PA 215	PA 214	PA 213
19	PA 212	PA 211	PA 210
18	PA 209	GND	PA 208
17	PA 207	PA 206	PA 205
16	PA 204	PA 203	PA 202
15	PA 201	PA 200	GND
14	PER 1	GND	PA 116
13	PA 115	PA 114	PA 113
12	PA 112	PA 111	PA 110
11	PA 109	GND	PA 108
10	PA 107	PA 106	PA 105
9	PA 104	PA 103	PA 102
8	PA 101	PA 100	GND
7	PER 0	GND	PA 016
6	PA 015	PA 014	PA 013
5	PA 012	PA 011	PA 010
4	PA 009	GND	PA 008
3	PA 007	PA 006	PA 005
2	PA 004	PA 003	PA 002
1	PA 001	PA 000	GND

CN10

	A	B	C
32	+5V	+5V	+5V
31	+5V	+5V	+5V
30	+5V	+5V	+5V
29			
28			
27			
26			
25			
24			
23			
22			
21			
20			
19			
18			
17	PL 23	PL 22	PL 21
16	PL 20	PL 13	PL 12
15	PL 11	PL 10	GND
14	TX 12	TX 11	TX 10
13	TX 9	TX 8	TX 7
12	GND	TX 6	TX 5
11	TX 4	TX 3	TX 2
10	TX 1	TX 0	GND
9			
8			
7	NC(-12VPS)		
6	-12V	-12V	-12V
5	-12V	-12V	-12V
4	NC(+5VPS)	NC(+5VPS)	NC(+12VPS)
3	+12V	+12V	+12V
2	+12V	+12V	+12V
1	+12V	+12V	+12V

FM-29

CN15

	A	B	C
32	FGY 7	FGY 6	FGY 5
31	FGY 4	FGY 3	FGY 2
30	FGY 1	FGY 0	GND
29	FGV 7	FGV 6	FGV 5
28	FGV 4	FGV 3	FGV 2
27	FGV 1	FGV 0	GND
26	FGU 7	FGU 6	FGU 5
25	FGU 4	FGU 3	FGU 2
24	FGU 1	FGU 0	GND
23	D 15	D 14	D 13
22	D 12	D 11	D 10
21	D 9	D 8	GND
20	D 7	D 6	D 5
19	D 4	D 3	D 2
18	D 1	D 0	GND
17		A 15	A 14
16	A 13	A 12	A 11
15	A 10	A 9	GND
14	A 8	A 7	A 6
13	A 5	A 4	A 3
12	A 2	A 1	GND
11			
10	GND	IN KEY	GND
9	ARAM	ARAMW	GND
8			ORG 1
7			
6			GND
5	RFLD	RVD	RHD
4	GND	RCK	GND
3	GND	GND	GND
2	GND	GND	GND
1	GND	GND	GND

CN14

	A	B	C
32	GND	GND	GND
31	BWFLD	BWVD	BWHD
30	GND	BWCK	GND
29	BWY 7	BWY 6	BWY 5
28	BWY 4	BWY 3	BWY 2
27	BWY 1	BWY 0	GND
26	BWV 7	BWV 6	BWV 5
25	BWV 4	BWV 3	BWV 2
24	BWV 1	BWV 0	GND
23	BWU 7	BWU 6	BWU 5
22	BWU 4	BWU 3	BWU 2
21	BWU 1	BWU 0	GND
20			
19	SLCT KEY	GND	BUS CONT
18			
17			
16			
15			
14			
13			
12			
11			
10			
9			
8			
7			
6			
5			
4			
3			
2			
1			

CN1

	A	B	C
32	+5V	+5V	+5V
31	+5V	+5V	+5V
30	+5V	+5V	+5V
29	MEY 7	MEY 6	MEY 5
28	MEY 4	MEY 3	MEY 2
27	MEY 1	MEY 0	GND
26	MEV 7	MEV 6	MEV 5
25	MEV 4	MEV 3	MEV 2
24	MEV 1	MEV 0	GND
23	MEU 7	MEU 6	MEU 5
22	MEU 4	MEU 3	MEU 2
21	MEU 1	MEU 0	GND
20	MEK 7	MEK 6	MEK 5
19	MEK 4	MEK 3	MEK 2
18	MEK 1	MEK 0	GND
17	BGY 7	BGY 6	BGY 5
16	BGY 4	BGY 3	BGY 2
15	BGY 1	BGY 0	GND
14	BGV 7	BGV 6	BGV 5
13	BGV 4	BGV 3	BGV 2
12	BGV 1	BGV 0	GND
11	BGU 7	BGU 6	BGU 5
10	BGU 4	BGU 3	BGU 2
9	BGU 1	BGU 0	GND
8			
7	NC(-12VPS)	GND	REF SYNC
6	-12V	-12V	-12V
5	-12V	-12V	-12V
4	NC(+5VPS)	NC(+5VPS)	NC(+12VPS)
3	+12V	+12V	+12V
2	+12V	+12V	+12V
1	+12V	+12V	+12V

5	+12V
4	+12V
3	GND
2	GND
1	-12V

4	+5V
3	+5V
2	GND
1	GND

4	+5V
3	+5V
2	GND
1	GND

3	GND
2	NC
1	+5V

D 5V

CN4

	A	B	C
32	+5V	+5V	+5V
31	+5V	+5V	+5V
30	+5V	+5V	+5V
29	MEY 7	MEY 6	MEY 5
28	MEY 4	MEY 3	MEY 2
27	MEY 1	MEY 0	GND
26	MEV 7	MEV 6	MEV 5
25	MEV 4	MEV 3	MEV 2
24	MEV 1	MEV 0	GND
23	MEU 7	MEU 6	MEU 5
22	MEU 4	MEU 3	MEU 2
21	MEU 1	MEU 0	GND
20	MEK 7	MEK 6	MEK 5
19	MEK 4	MEK 3	MEK 2
18	MEK 1	MEK 0	GND
17	PL 23	PL 22	PL 21
16	PL 20	PL 13	PL 12
15	PL 11	PL 10	GND
14	TX 12	TX 11	TX 10
13	TX 9	TX 8	TX 7
12	GND	TX 6	TX 5
11	TX 4	TX 3	TX 2
10	TX 1	TX 0	GND
9			
8			
7	NC(-12VPS)		
6	-12V	-12V	-12V
5	-12V	-12V	-12V
4	NC(+5VPS)	NC(+5VPS)	NC(+12VPS)
3	+12V	+12V	+12V
2	+12V	+12V	+12V
1	+12V	+12V	+12V

CN13

	A	B	C
32	+5V	+5V	+5V
31	+5V	+5V	+5V
30	+5V	+5V	+5V
29	AWY 7	AWY 6	AWY 5
28	AWY 4	AWY 3	AWY 2
27	AWY 1	AWY 0	GND
26	AWV 7	AWV 6	AWV 5
25	AWV 4	AWV 3	AWV 2
24	AWV 1	AWV 0	GND
23	AWU 7	AWU 6	AWU 5
22	AWU 4	AWU 3	AWU 2
21	AWU 1	AWU 0	GND
20	AWFLD	AWVD	AWHD
19	GND	AWCK	GND
18			
17	BGY 7	BGY 6	BGY 5
16	BGY 4	BGY 3	BGY 2
15	BGY 1	BGY 0	GND
14	BGV 7	BGV 6	BGV 5
13	BGV 4	BGV 3	BGV 2
12	BGV 1	BGV 0	GND
11	BGU 7	BGU 6	BGU 5
10	BGU 4	BGU 3	BGU 2
9	BGU 1	BGU 0	GND
8			
7	NC(-12VPS)		
6	-12V	-12V	-12V
5	-12V	-12V	-12V
4	NC(+5VPS)	NC(+5VPS)	NC(+12VPS)
3	+12V	+12V	+12V
2	+12V	+12V	+12V
1	+12V	+12V	+12V

A B C D E F G H

MY-54

CN9

	A	B	C
32	FGY 7	FGY 6	FGY 5
31	FGY 4	FGY 3	FGY 2
30	FGY 1	FGY 0	GND
29	FGV 7	FGV 6	FGV 5
28	FGV 4	FGV 3	FGV 2
27	FGV 1	FGV 0	GND
26	FGU 7	FGU 6	FGU 5
25	FGU 4	FGU 3	FGU 2
24	FGU 1	FGU 0	GND
23	D 15	D 14	D 13
22	D 12	D 11	D 10
21	D 9	D 8	GND
20	D 7	D 6	D 5
19	D 4	D 3	D 2
18	D 1	D 0	GND
17	A 16	A 15	A 14
16	A 13	A 12	A 11
15	A 10	A 9	GND
14	A 8	A 7	A 6
13	A 5	A 4	A 3
12	A 2	A 1	GND
11	A 0	UBE	
10	GND	IN KEY	GND
9			GND
8	MTRX		ORG 1
7			
6			GND
5	RFLD	RVD	RHD
4	GND	RCK	GND
3	GND	GND	GND
2	GND	GND	GND
1	GND	GND	GND

C
D 13
D 10
GND
D 5
D 2
GND
A 14
A 11
GND
A 8
A 3
GND
GND
OPT 1
GND
RHD
GND
GND
GND
GND

PU-78

CN12

	A	B	C
32			
31			
30			
29			
28			
27			
26			
25			
24			
23	D 15	D 14	D 13
22	D 12	D 11	D 10
21	D 9	D 8	GND
20	D 7	D 6	D 5
19	D 4	D 3	D 2
18	D 1	D 0	GND
17	A 16	A 15	A 14
16	A 13	A 12	A 11
15	A 10	A 9	GND
14	A 8	A 7	A 6
13	A 5	A 4	A 3
12	A 2	A 1	GND
11			
10			
9	ARAM	ARAMW	GND
8	PA 3YS		ORG 1
7	PA 3XS		OPT 1
6			GND
5		RVD	RHD
4	GND	RCK	GND
3	GND	GND	GND
2	GND	GND	GND
1	GND	GND	GND

FM-29

CN15

	A	B	C
32	FGY 7	FGY 6	FGY 5
31	FGY 4	FGY 3	FGY 2
30	FGY 1	FGY 0	GND
29	FGV 7	FGV 6	FGV 5
28	FGV 4	FGV 3	FGV 2
27	FGV 1	FGV 0	GND
26	FGU 7	FGU 6	FGU 5
25	FGU 4	FGU 3	FGU 2
24	FGU 1	FGU 0	GND
23	D 15	D 14	D 13
22	D 12	D 11	D 10
21	D 9	D 8	GND
20	D 7	D 6	D 5
19	D 4	D 3	D 2
18	D 1	D 0	GND
17		A 15	A 14
16	A 13	A 12	A 11
15	A 10	A 9	GND
14	A 8	A 7	A 6
13	A 5	A 4	A 3
12	A 2	A 1	GND
11			
10	GND	IN KEY	GND
9	ARAM	ARAMW	GND
8			ORG 1
7			
6			GND
5	RFLD	RVD	RHD
4	GND	RCK	GND
3	GND	GND	GND
2	GND	GND	GND
1	GND	GND	GND

SY-172

CN18

	A	B	C
32	ISA 2	ISA 1	ISA 0
31	ISB 2	ISB 1	ISB 0
30			GND
29			
28			
27			
26			
25			
24			
23	D 15	D 14	D 13
22	D 12	D 11	D 10
21	D 9	D 8	GND
20	D 7	D 6	D 5
19	D 4	D 3	D 2
18	D 1	D 0	GND
17	A 15	A 15	A 14
16	A 13	A 12	A 11
15	A 10	A 9	GND
14	A 8	A 7	A 6
13	A 5	A 4	A 3
12	A 2	A 1	GND
11	A 0	UBE	
10			
9	ARAM	ARAMW	GND
8	MTRX	ORG 2	ORG 1
7	BVS	OPT 2	OPT 1
6	RESET		
5	RFLD	RVD	
4	GND		GND
3	GND	GND	GND
2	GND	GND	GND
1	GND	GND	GND

AD-76

CN21

	A	B	C
32	ISA 2	ISA 1	ISA 0
31	ISB 2	ISB 1	ISB 0
30			GND
29			
28			
27			
26			
25			
24			
23			
22			
21			
20			
19			
18			
17			
16			
15			
14			
13			
12			
11			
10			
9			
8			
7			
6			
5			
4			
3	GND	GND	GND
2	GND	GND	GND
1	GND	GND	GND

CN8

	A	B	C
32	GND	CEF 9	CEF 8
31	CEF 7	CEF 6	CEF 5
30	GND	CEF 4	CEF 3
29	CEF 2	CEF 1	CEF 0
28	PER 3	GND	PA 316
27	PA 315	PA 314	PA 313
26	PA 312	PA 311	PA 310
25	PA 309	GND	PA 308
24	PA 307	PA 306	PA 305
23	PA 304	PA 303	PA 302
22	PA 301	PA 300	GND
21	PER 2	GND	PA 216
20	PA 215	PA 214	PA 213
19	PA 212	PA 211	PA 210
18	PA 209	GND	PA 208
17	PA 207	PA 206	PA 205
16	PA 204	PA 203	PA 202
15	PA 201	PA 200	GND
14	PER 1	GND	PA 116
13	PA 115	PA 114	PA 113
12	PA 112	PA 111	PA 110
11	PA 109	GND	PA 108
10	PA 107	PA 106	PA 105
9	PA 104	PA 103	PA 102
8	PA 101	PA 100	GND
7	PER 0	GND	PA 016
6	PA 015	PA 014	PA 013
5	PA 012	PA 011	PA 010
4	PA 009	GND	PA 008
3	PA 007	PA 006	PA 005
2	PA 004	PA 003	PA 002
1	PA 001	PA 000	GND

C
CEF 8
CEF 3
PA 316
PA 313
PA 310
PA 308
PA 305
PA 302
GND
GND
OPY 5
OPY 2
GND
OPV 5
OPV 2
GND
OPU 5
OPU 2
GND
OPK 5
OPK 2
GND

CN11

	A	B	C
32	GND	CEF 9	CEF 8
31	CEF 7	CEF 6	CEF 5
30	GND	CEF 4	CEF 3
29	CEF 2	CEF 1	CEF 0
28	PER 3	GND	PA 316
27	PA 315	PA 314	PA 313
26	PA 312	PA 311	PA 310
25	PA 309	GND	PA 308
24	PA 307	PA 306	PA 305
23	PA 304	PA 303	PA 302
22	PA 301	PA 300	GND
21	PER 2	GND	PA 216
20	PA 215	PA 214	PA 213
19	PA 212	PA 211	PA 210
18	PA 209	GND	PA 208
17	PA 207	PA 206	PA 205
16	PA 204	PA 203	PA 202
15	PA 201	PA 200	GND
14	PER 1	GND	PA 116
13	PA 115	PA 114	PA 113
12	PA 112	PA 111	PA 110
11	PA 109	GND	PA 108
10	PA 107	PA 106	PA 105
9	PA 104	PA 103	PA 102
8	PA 101	PA 100	GND
7	PER 0	GND	PA 016
6	PA 015	PA 014	PA 013
5	PA 012	PA 011	PA 010
4	PA 009	GND	PA 008
3	PA 007	PA 006	PA 005
2	PA 004	PA 003	PA 002
1	PA 001	PA 000	GND

CN14

	A	B	C
32	GND	GND	GND
31	BWFLD	BWVD	BWHD
30	GND	BWCK	GND
29	BWY 7	BWY 6	BWY 5
28	BWY 4	BWY 3	BWY 2
27	BWY 1	BWY 0	GND
26	BWV 7	BWV 6	BWV 5
25	BWV 4	BWV 3	BWV 2
24	BWV 1	BWV 0	GND
23	BWU 7	BWU 6	BWU 5
22	BWU 4	BWU 3	BWU 2
21	BWU 1	BWU 0	GND
20			
19	SLCT KEY	GND	BUS CONT
18			
17			
16			
15			
14			
13			
12			
11			
10			
9			
8			
7			
6			
5			
4			
3			
2			
1			

CN20

	A	B	C
32	GND	GND	GND
31	BWFLD	BWVD	BWHD
30	GND	BWCK	GND
29	BWY 7	BWY 6	BWY 5
28	BWY 4	BWY 3	BWY 2
27	BWY 1	BWY 0	GND
26	BWV 7	BWV 6	BWV 5
25	BWV 4	BWV 3	BWV 2
24	BWV 1	BWV 0	GND
23	BWU 7	BWU 6	BWU 5
22	BWU 4	BWU 3	BWU 2
21	BWU 1	BWU 0	GND
20			
19	SLCT KEY	GND	BUS CONT
18		EXT KEY	GND
17			
16	GND	Y IN 4	GND
15	C IN 4	GND	CPN V4
14	VIDEO IN 4	CPN Y4	GND
13	GND	GND	CPN U4
12	GND	Y IN 3	GND
11	C IN 3	GND	CPN V3
10	VIDEO IN 3	CPN Y3	GND
9	GND	GND	CPN U3
8	GND	Y IN 2	GND
7	C IN 2	GND	CPN V2
6	VIDEO IN 2	CPN Y2	GND
5	GND	GND	CPN U2
4	GND	Y IN 1	GND
3	C IN 1	GND	CPN V1
2	VIDEO IN 1	CPN Y1	GND
1	GND	GND	CPN U1

CN7

	A	B	C
32	+5V	+5V	+5V
31	+5V	+5V	+5V
30	+5V	+5V	+5V
29	MEY 7	MEY 6	MEY 5
28	MEY 4	MEY 3	MEY 2
27	MEY 1	MEY 0	GND
26	MEV 7	MEV 6	MEV 5
25	MEV 4	MEV 3	MEV 2
24	MEV 1	MEV 0	GND
23	MEU 7	MEU 6	MEU 5
22	MEU 4	MEU 3	MEU 2
21	MEU 1	MEU 0	GND
20	MEK 7	MEK 6	MEK 5
19	MEK 4	MEK 3	MEK 2
18	MEK 1	MEK 0	GND
17			
16			
15			
14			
13			
12			
11			
10			
9			
8			
7	NC(-12VPS)		
6	-12V	-12V	-12V
5	-12V	-12V	-12V
4	NC(+5VPS)	NC(+5VPS)	NC(+12VPS)
3	+12V	+12V	+12V
2	+12V	+12V	+12V
1	+12V	+12V	+12V

C
+5V
+5V
+5V
MEY 5
MEY 2
GND
MEV 5
MEV 2
GND
MEU 5
MEU 2
GND
MEK 5
MEK 2
GND
PL 21
PL 12
GND
TX 10
TX 7
TX 5
TX 2
GND
-12V
-12V
NC(+12VPS)
+12V
+12V
+12V

CN10

	A	B	C
32	+5V	+5V	+5V
31	+5V	+5V	+5V
30	+5V	+5V	+5V
29			
28			
27			
26			
25			
24			
23			
22			
21			
20			
19			
18			
17	PL 23	PL 22	PL 21
16	PL 20	PL 13	PL 12
15	PL 11	PL 10	GND
14	TX 12	TX 11	TX 10
13	TX 9	TX 8	TX 7
12	GND	TX 6	TX 5
11	TX 4	TX 3	TX 2
10	TX 1	TX 0	GND
9			
8			
7	NC(-12VPS)		
6	-12V	-12V	-12V
5	-12V	-12V	-12V
4	NC(+5VPS)	NC(+5VPS)	NC(+12VPS)
3	+12V	+12V	+12V
2	+12V	+12V	+12V
1	+12V	+12V	+12V

CN13

	A	B	C
32	+5V	+5V	+5V
31	+5V	+5V	+5V
30	+5V	+5V	+5V
29	AWY 7	AWY 6	AWY 5
28	AWY 4	AWY 3	AWY 2
27	AWY 1	AWY 0	GND
26	AWV 7	AWV 6	AWV 5
25	AWV 4	AWV 3	AWV 2
24	AWV 1	AWV 0	GND
23	AWU 7	AWU 6	AWU 5
22	AWU 4	AWU 3	AWU 2
21	AWU 1	AWU 0	GND
20	AWFLD	AWVD	AWHD
19	GND	AWCK	GND
18			
17	BGY 7	BGY 6	BGY 5
16	BGY 4	BGY 3	BGY 2
15	BGY 1	BGY 0	GND
14	BGV 7	BGV 6	BGV 5
13	BGV 4	BGV 3	BGV 2
12	BGV 1	BGV 0	GND
11	BGU 7	BGU 6	BGU 5
10	BGU 4	BGU 3	BGU 2
9	BGU 1	BGU 0	GND
8			
7	NC(-12VPS)		
6	-12V	-12V	-12V
5	-12V	-12V	-12V
4	NC(+5VPS)	NC(+5VPS)	NC(+12VPS)
3	+12V	+12V	+12V
2	+12V	+12V	+12V
1	+12V	+12V	+12V

CN16

	A	B	C
32	+5V	+5V	+5V
31	+5V	+5V	+5V
30	+5V	+5V	+5V
29			
28			
27			
26			
25			
24			
23			
22			
21			
20			
19			
18			
17	KTD +	GND	KTD -
16	GND	KRD +	GND
15	KRD -	GND	RVD +
14	GND	RVD -	GND
13	XMIT +	GND	XMIT -
12	GND	RCV +	GND
11	RCV -	GND	
10			
9	T 2	GND	
8	T 1	GND	
7	NC(-12VPS)		
6	-12V	-12V	-12V
5	-12V	-12V	-12V
4	NC(+5VPS)	NC(+5VPS)	NC(+12VPS)
3	+12V	+12V	+12V
2	+12V	+12V	+12V
1	+12V	+12V	+12V

CN19

	A	B	C
32	+5V	+5V	+5V
31	+5V	+5V	+5V
30	+5V	+5V	+5V
29	AWY 7	AWY 6	AWY 5
28	AWY 4	AWY 3	AWY 2
27	AWY 1	AWY 0	GND
26	AWV 7	AWV 6	AWV 5
25	AWV 4	AWV 3	AWV 2
24	AWV 1	AWV 0	GND
23	AWU 7	AWU 6	AWU 5
22	AWU 4	AWU 3	AWU 2
21	AWU 1	AWU 0	GND
20	AWFLD	AWVD	AWHD
19	GND	AWCK	GND
18			
17	KTD +	GND	KTD -
16	GND	KRD +	GND
15	KRD -	GND	RVD +
14	GND	RVD -	GND
13	XMIT +	GND	XMIT -
12	GND	RCV +	GND
11	RCV -	GND	
10			
9	T 2	GND	
8	T 1	GND	
7	NC(-12VPS)	GND	REF SYNC
6	-12V	-12V	-12V
5	-12V	-12V	-12V
4	NC(+5VPS)	NC(+5VPS)	NC(+12VPS)
3	+12V	+12V	+12V
2	+12V	+12V	+12V
1	+12V	+12V	+12V

MB-385 BOARD
BOARD NO.1-644-603-11
DFS-500
DFS-500P

E F G H I J K L

4 5

KY-223(1/3);CPU

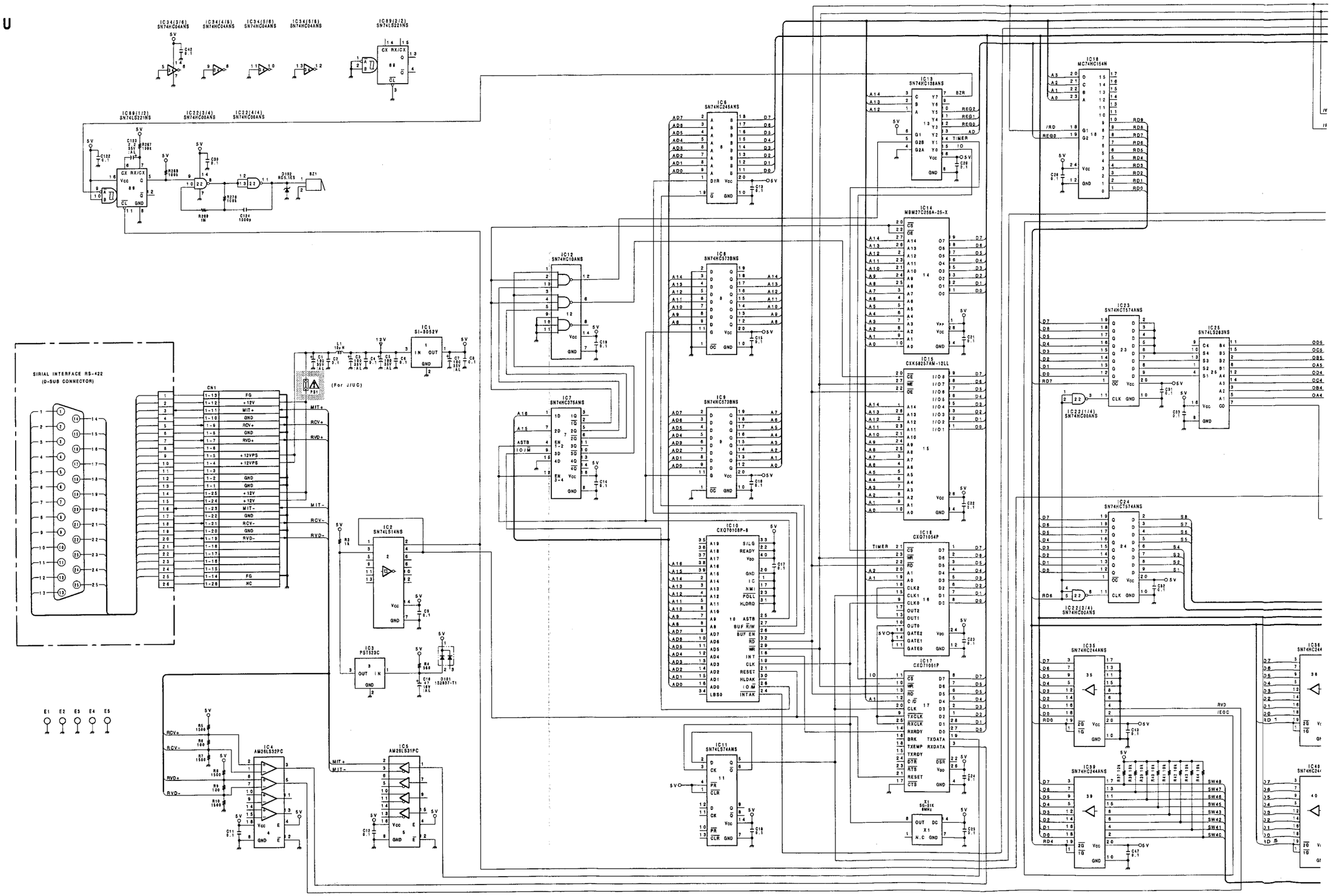

A | B | C | D | E | F | G | H

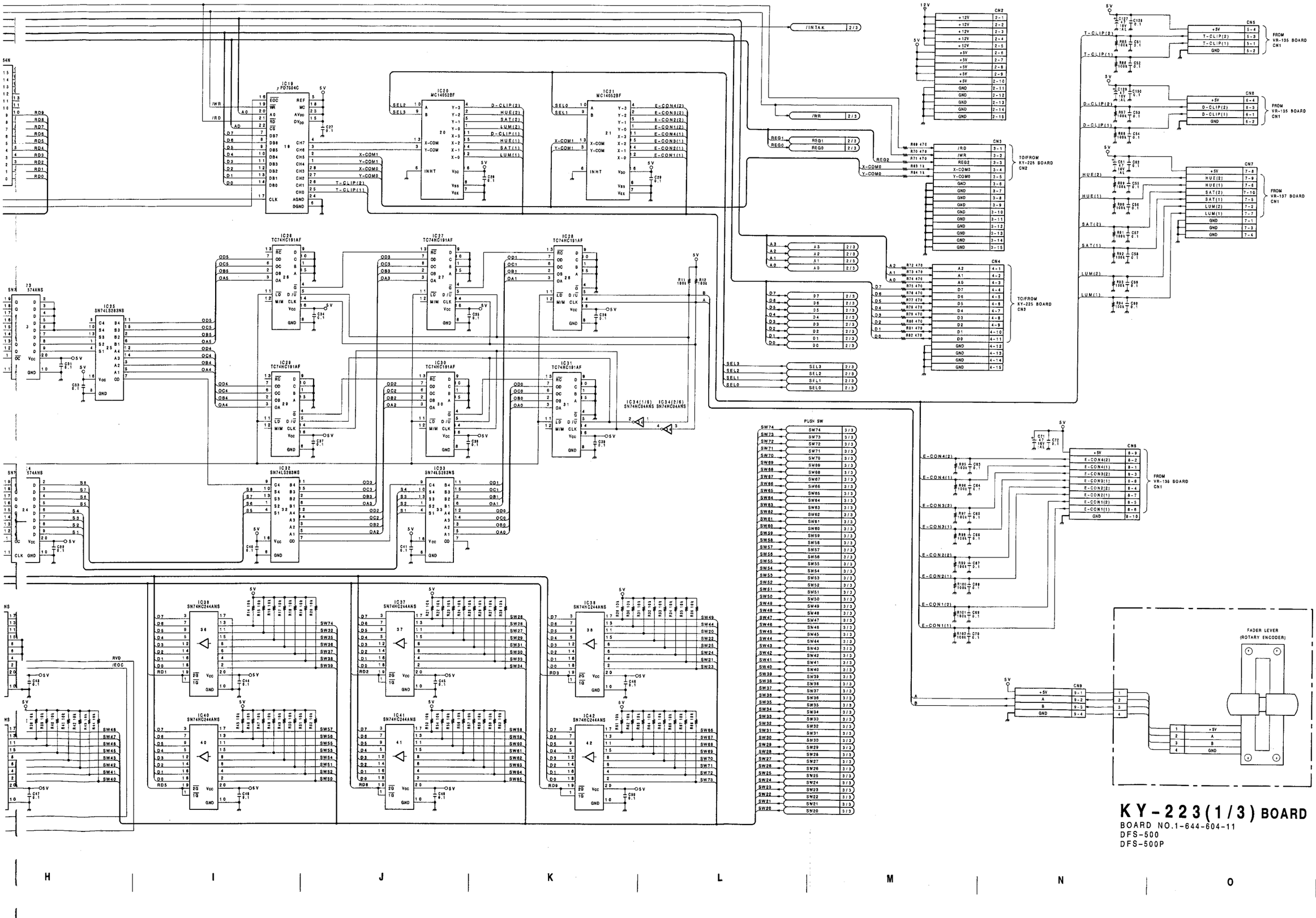

KY-223(1/3) BOARD

BOARD NO.1-644-604-11
DFS-500
DFS-500P

KY-223(2/3);LED Driver

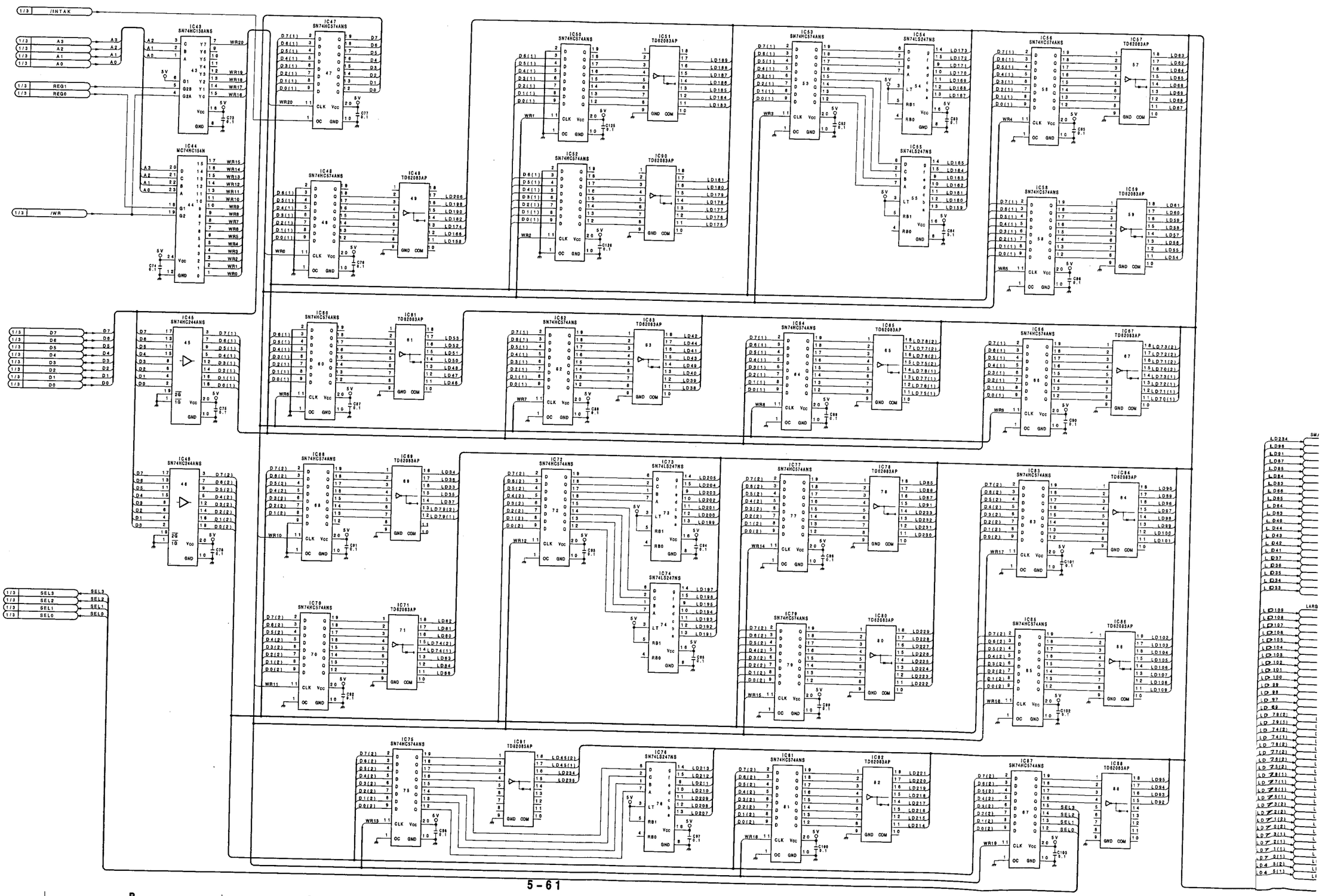

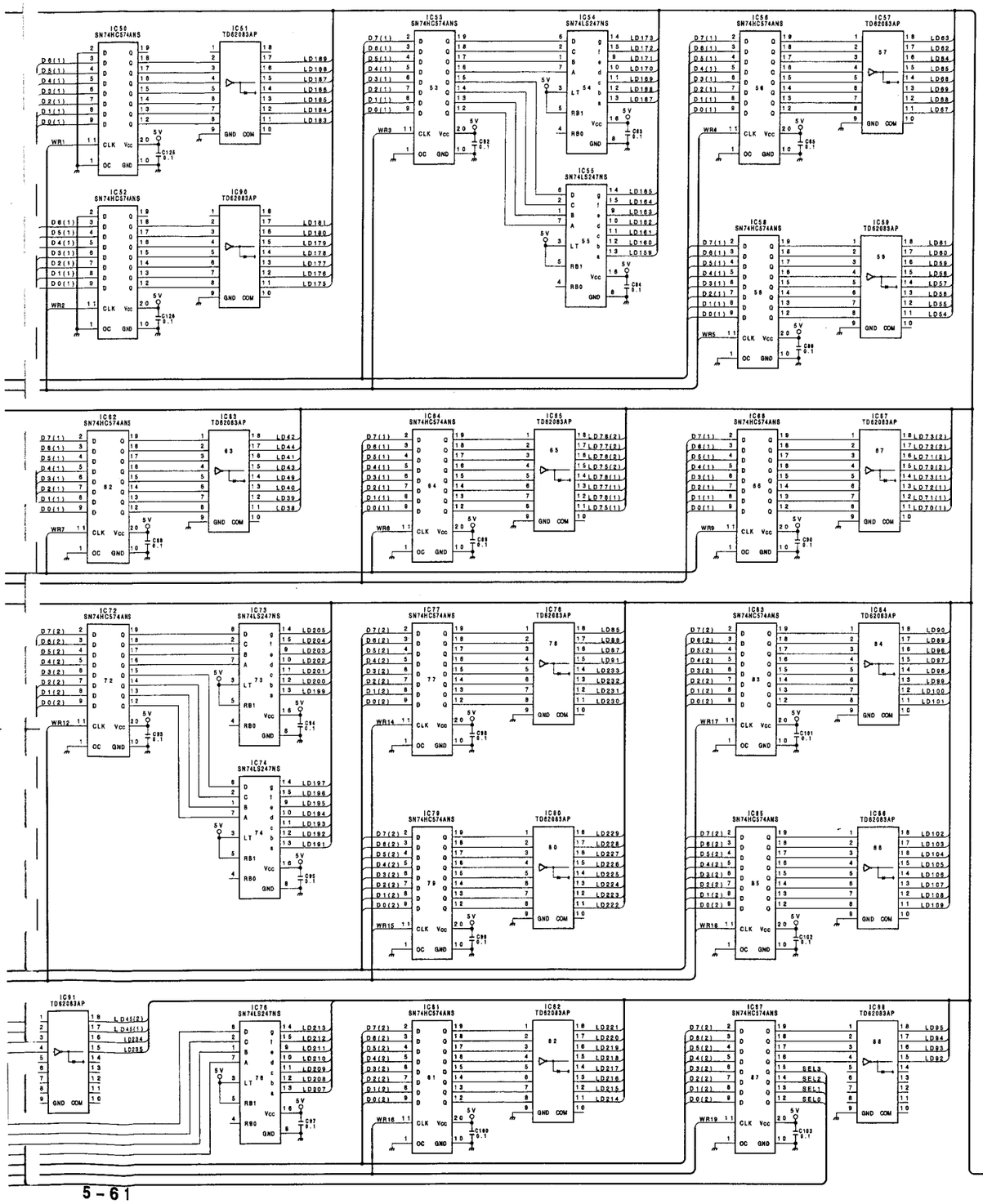

KY-223(2/3) BOAF

BOARD NO.1-644-604-11
DFS-500
DFS-500P

KY-223(3/3);LED & Switch

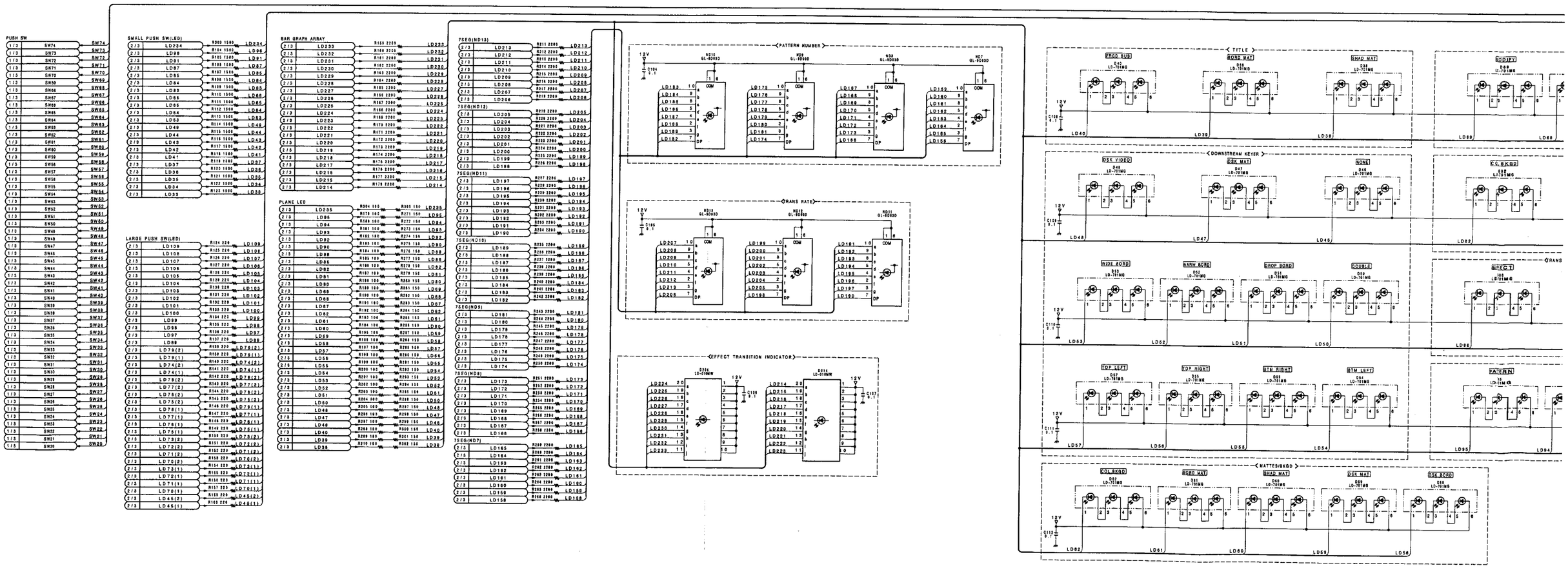

KY-223(3/3) CONTROL PANEL

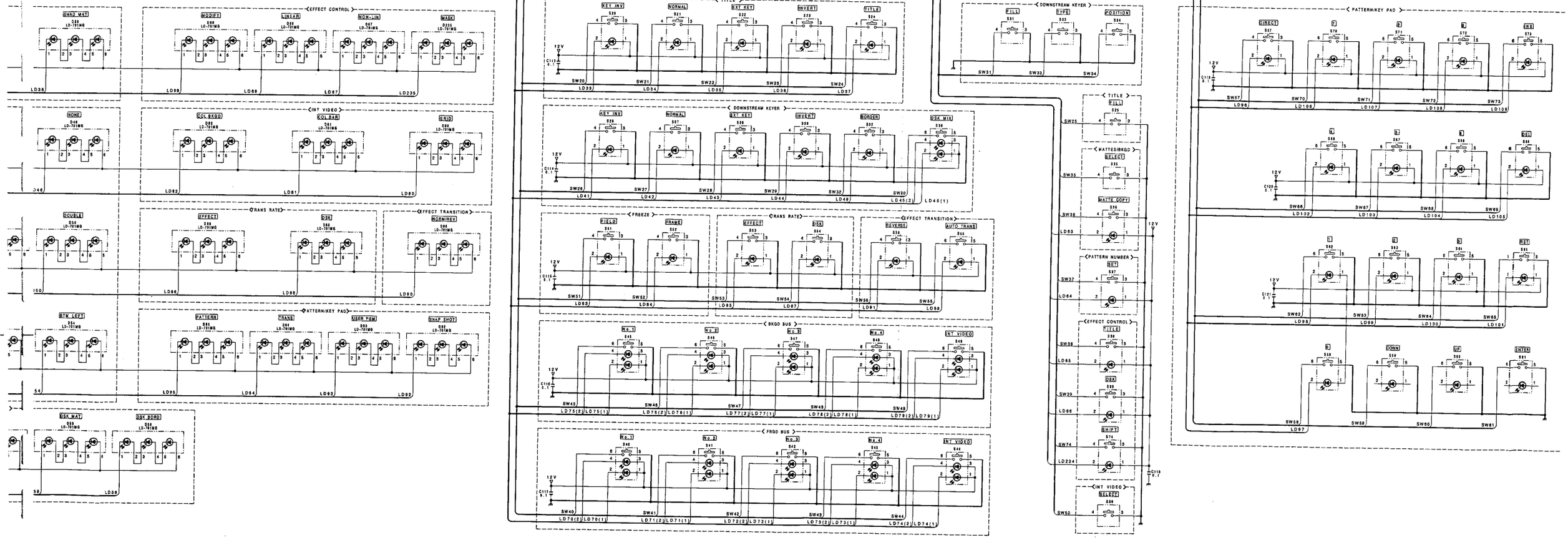

KY-223(3/3) BOARD

BOARD NO.1-644-604-11
DFS-500
DFS-500P

KY-225(1/2);LED Driver

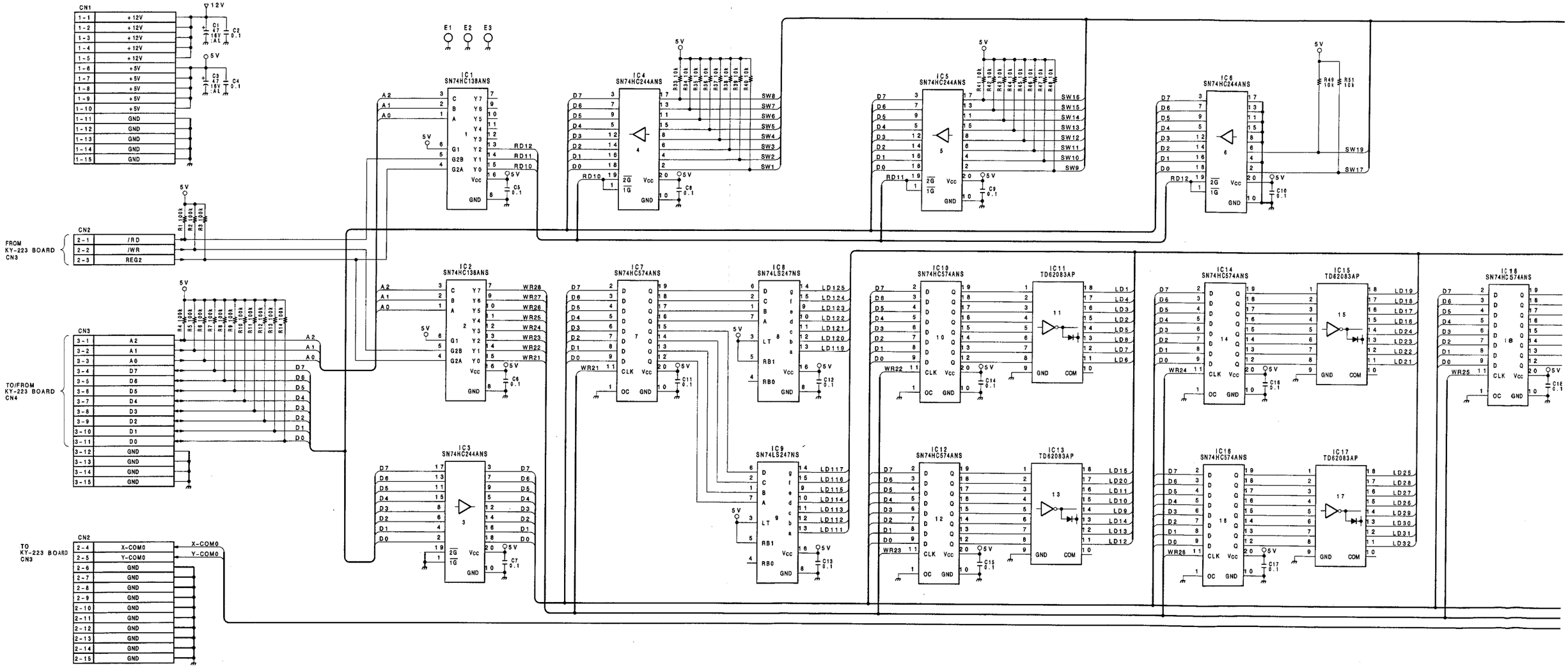

KY-225(1/2) CONTROL PANEL

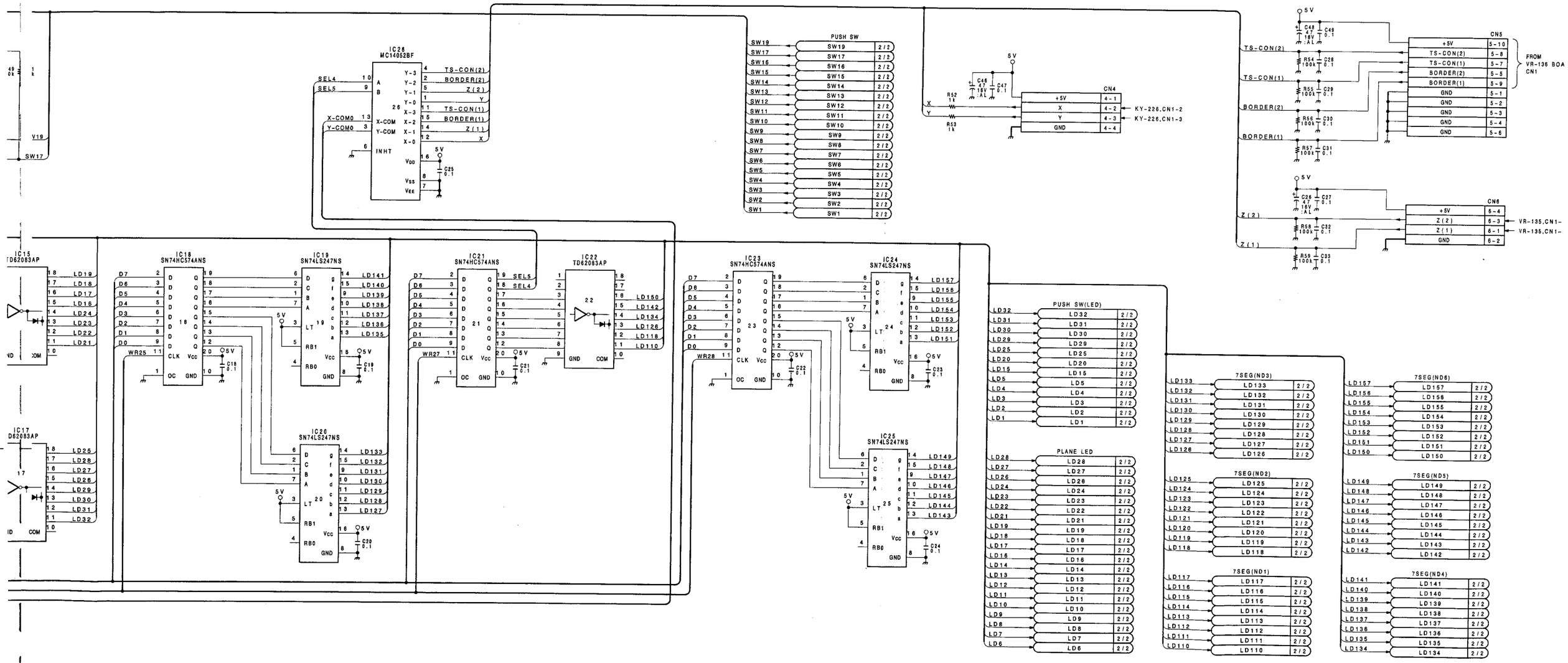

KY-225(1/2) BOARD

BOARD NO.1-644-605-11
DFS-500
DFS-500P

KY-225(2/2);LED & Switch

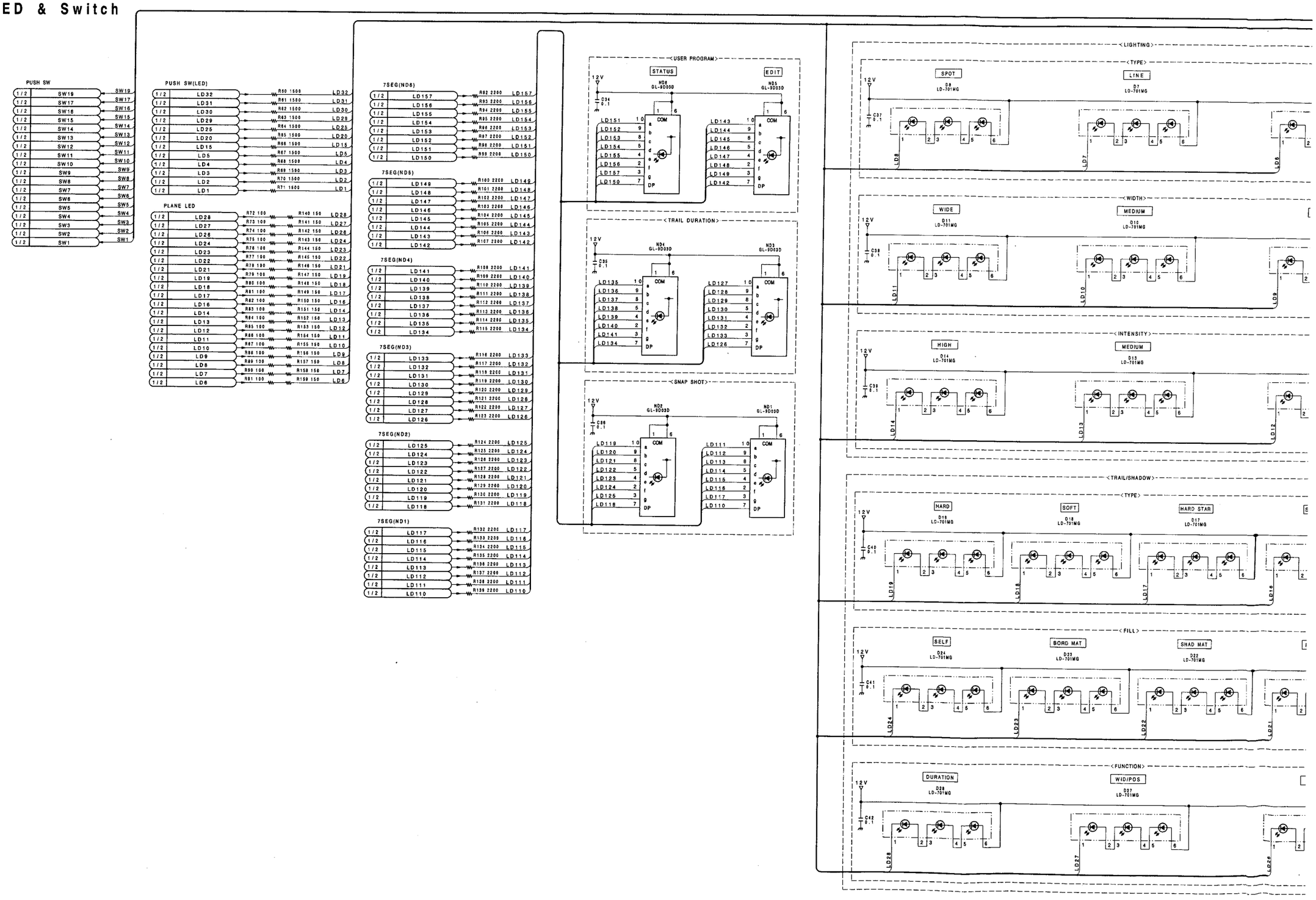

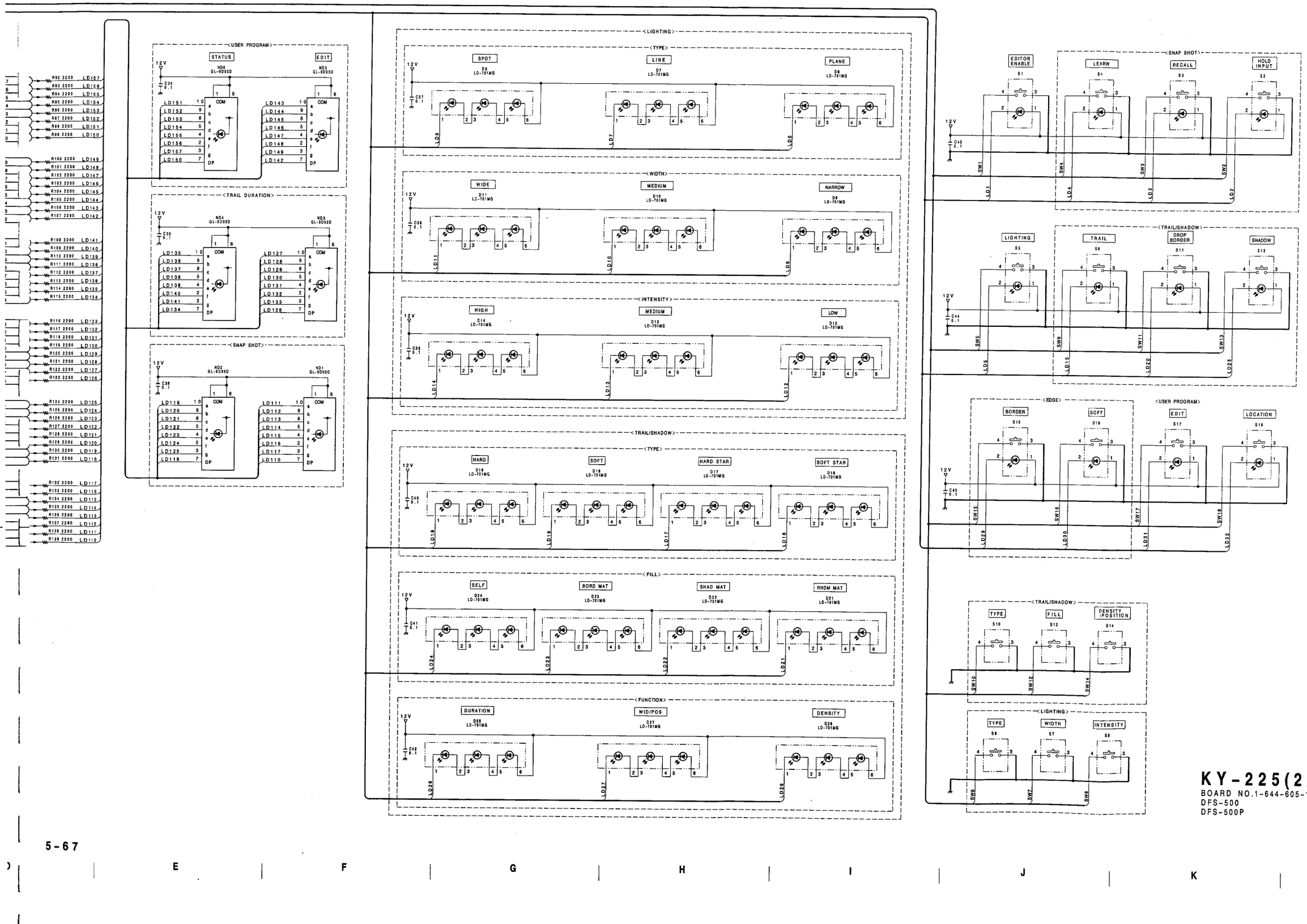

KY-225(2/2) BOARD

BOARD NO.1-644-605-11
DFS-500
DFS-500P

PROCESS UNIT FRAME WIRING(1/3) FRAME WIRING(1/3) PROCESS UNIT

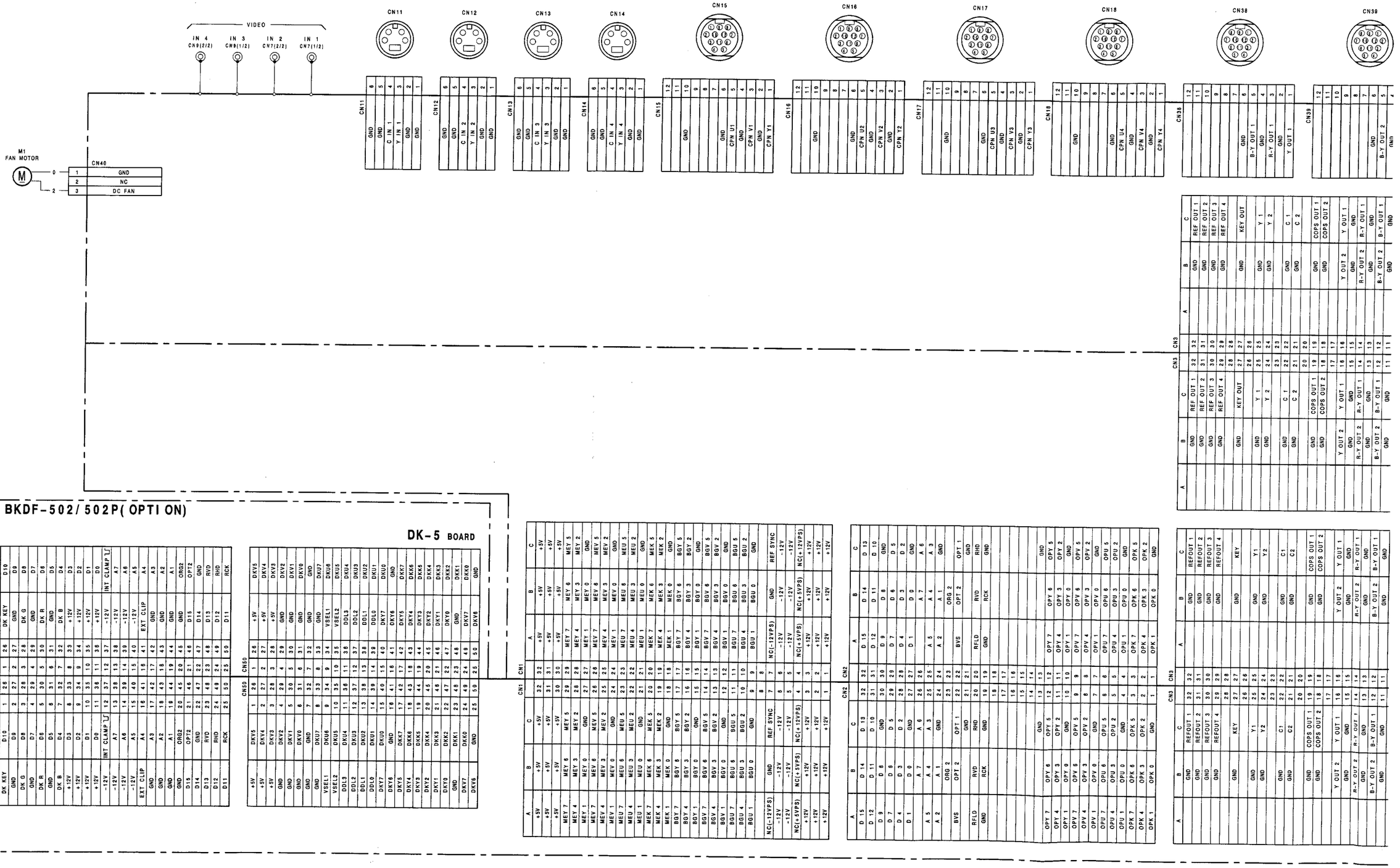

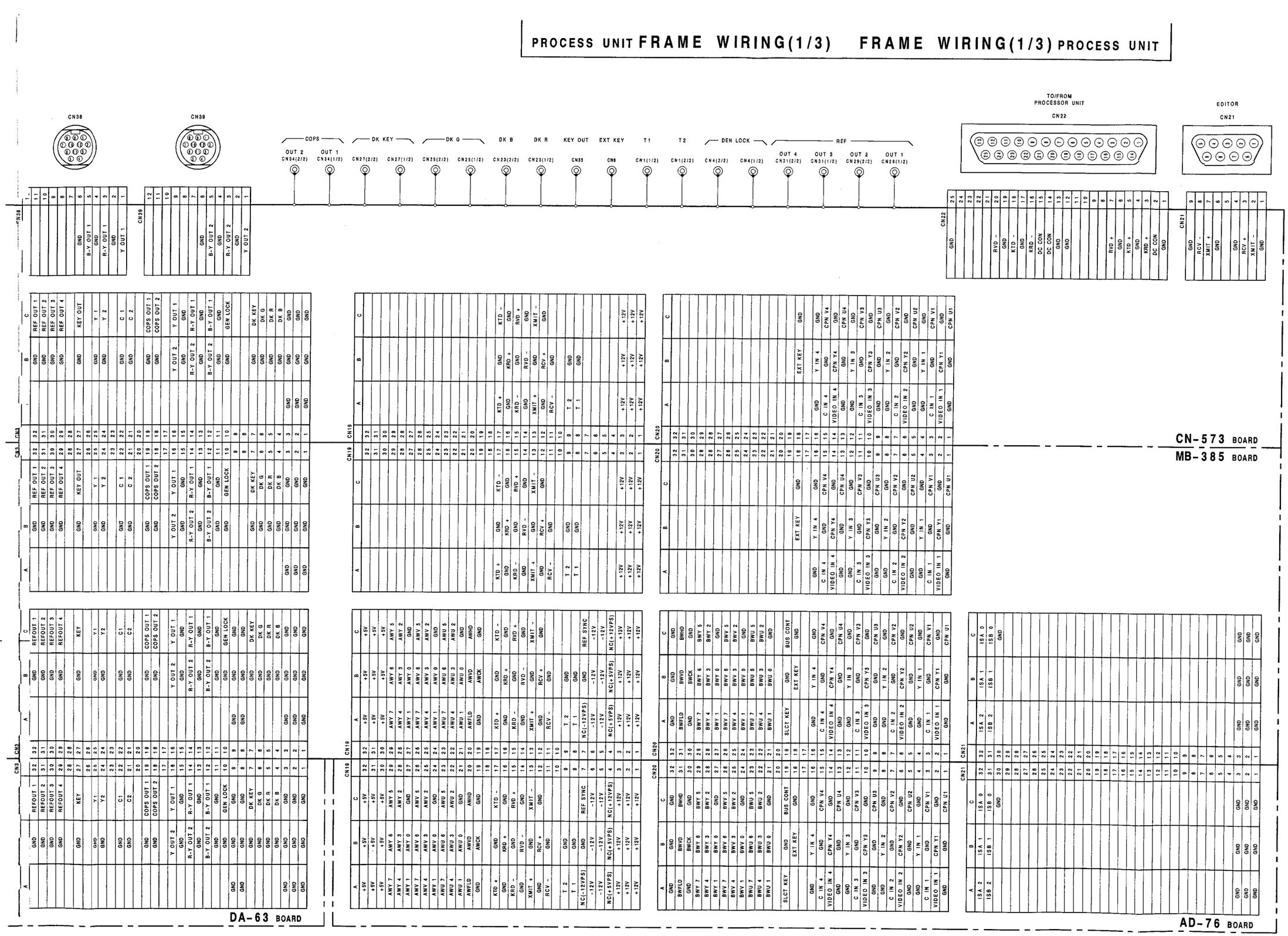

FRAME WIRING(
DFS-500
DFS-500P

BKDF-501/501P(OPTION)

VE-25 BOARD

CN4

A	B	C
+5V	+5V	+5V
+5V	+5V	+5V
+5V	+5V	+5V
MEY 7	MEY 6	MEY 5
MEY 4	MEY 3	MEY 2
MEY 1	MEY 0	GND
MEY 7	MEY 8	MEY 5
MEY 4	MEY 3	MEY 2
MEY 1	MEY 0	GND
MEU 7	MEU 6	MEU 5
MEU 4	MEU 3	MEU 2
MEU 1	MEU 0	GND
MEK 7	MEK 6	MEK 5
MEK 4	MEK 3	MEK 2
MEK 1	MEK 0	GND
PL 23	PL 22	PL 21
PL 20	PL 13	PL 12
PL 11	PL 10	GND
TX 12	TX 11	TX 10
TX 9	TX 8	TX 7
GND	TX 7	TX 6
TX 4	TX 6	TX 5
TX 1	TX 5	TX 4
	TX 4	TX 3
	TX 3	TX 2
	TX 2	GND
	TX 0	
NC(-12VPS)		
-12V	-12V	-12V
-12V	-12V	-12V
NC(+5VPS)	NC(+12VPS)	NC(+12VPS)
+12V	+12V	+12V
+12V	+12V	+12V
+12V	+12V	+12V

CN5

A	B	C
GND	CEF 9	CEF 8
GND	CEF 4	CEF 3
	GND	PA 316
PA 315	PA 314	PA 313
PA 312	PA 311	PA 310
PA 309	GND	PA 308
PA 307	PA 306	PA 305
PA 304	PA 303	PA 302
PA 301	PA 300	GND

FRAME WIRING(2/3)

DFS-500
DFS-500P

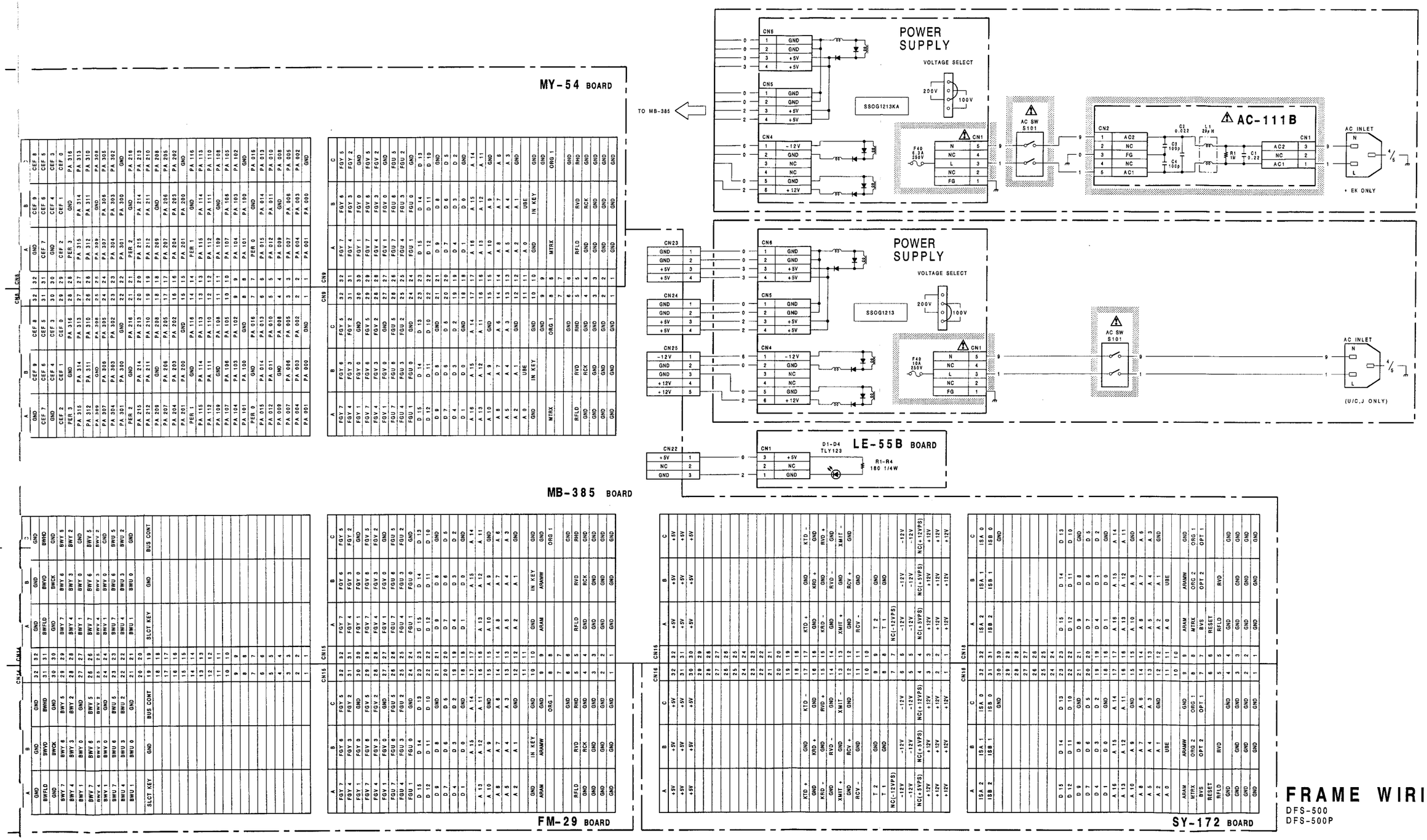

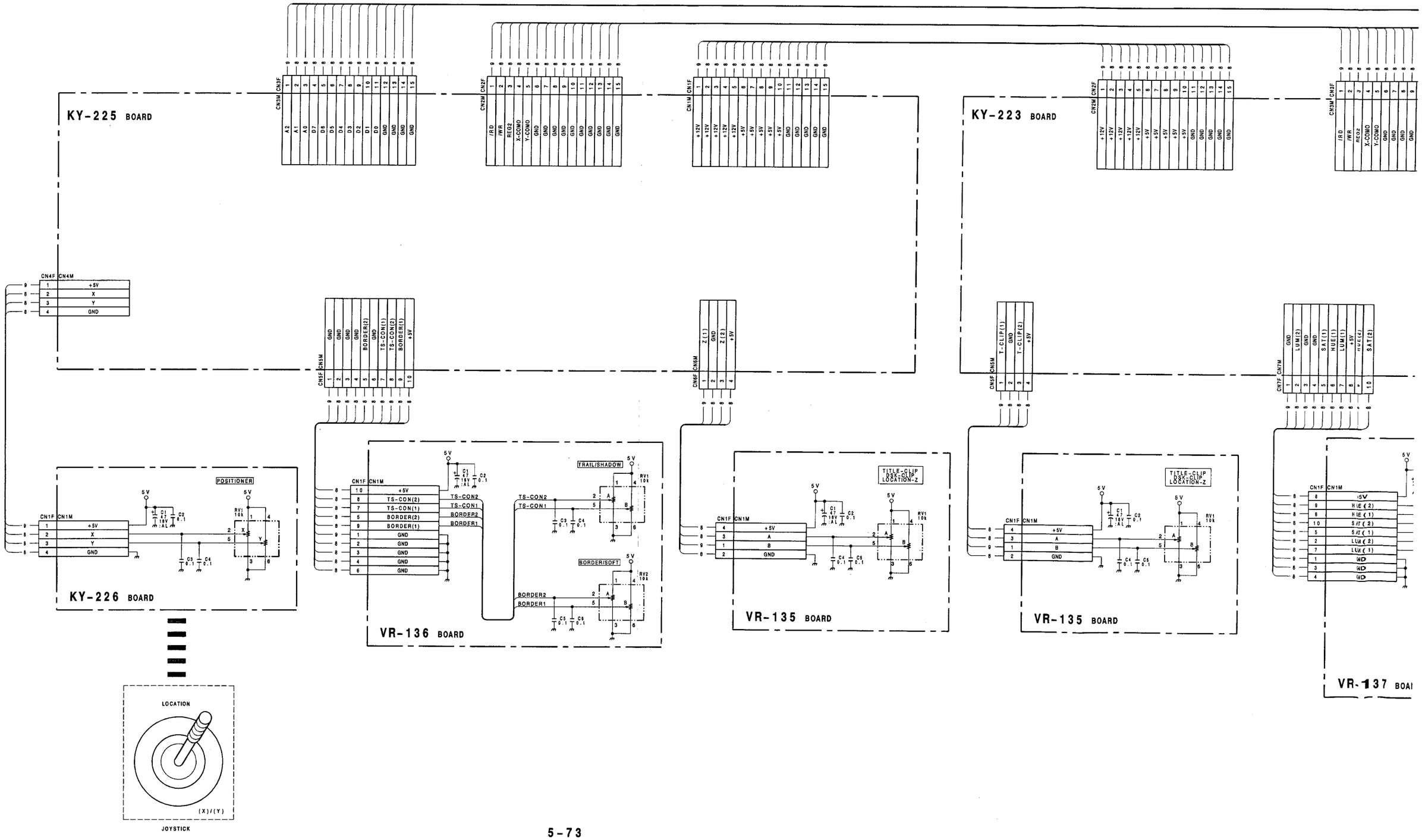
KY-225 BOARD
CN3M CN3F
A2 A1 A0 D7 D6 D5 D4 D3 D2 D1 D0 GND GND GND GND
CN2M CN2F
IRD IWR REQ2 X-COMO Y-COMO GND GND GND GND GND GND GND GND GND
CN1M CN1F
+12V +12V +12V +12V +12V +5V +5V +5V +5V GND GND GND GND GND
CN4F CN4M
+5V X Y GND
CN5F CN5M
GND GND GND GND BORDER(2) GND TS-CON(1) TS-CON(2) BORDER(1) +5V
CN6F CN6M
Z(1) GND Z(2) +5V
KY-223 BOARD
CN2M CN2F
+12V +12V +12V +12V +12V +5V +5V +5V +5V GND GND GND GND GND
CN3M CN3F
IRD IWR REQ2 X-COMO Y-COMO GND GND GND GND
CN5F CN5M
T-CLIP(1) GND T-CLIP(2) +5V
CN7F CN7M
GND LUM(2) GND GND SAT(1) HUE(1) LUM(1) +5V HUE(2) SAT(2)
KY-226 BOARD
POSITIONER
CN1F CN1M
+5V X Y GND
C1 47 16V AL
C2 0.1
C3 0.1
C4 0.1
RV1 10k
LOCATION
(X)/(Y)
JOYSTICK
VR-136 BOARD
CN1F CN1M
+5V TS-CON(2) TS-CON(1) BORDER(2) BORDER(1) GND GND GND GND GND
TS-CON2
TS-CON1
BORDER2
BORDER1
TRAIL/SHADOW
BORDER/SOFT
RV1 10k
RV2 10k
C1 47 16V AL
C2 0.1
C3 0.1
C4 0.1
C5 0.1
C6 0.1
VR-135 BOARD
TITLE-CLIP
DSK-CLIP
LOCATION-Z
CN1F CN1M
+5V A B GND
C1 47 16V AL
C2 0.1
C4 0.1
C5 0.1
RV1 10k
VR-135 BOARD
TITLE-CLIP
DSK-CLIP
LOCATION-Z
CN1F CN1M
+5V A B GND
C1 47 16V AL
C2 0.1
C4 0.1
C5 0.1
RV1 10k
VR-137 BOAI
CN1F CN1M
+5V HUE(2) HUE(1) SAT(2) SAT(1) LUM(2) LUM(1) GND GND GND
5V

A B C D E F G H I

TO/FROM
PROCESSOR UNIT
CN1
(D-SUB 25P)

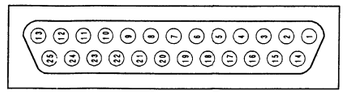

CN3M CN3F
/RD
/WR
REG2
X-COMO
Y-COMO
GND ×10

CN4M CN4F
A2
A1
A0
D7
D6
D5
D4
D3
D2
D1
D0
GND ×6

CN1
GND ×2
+12VPS ×2
RVD+
GND
RCV+
GND
MIT+
+12V
FG ×2
RVD-
GND
RCV-
GND
MIT-
+12V ×2
NC

CN9M CN9F
+5V 1 — 6
A 2 — 3
B 3 — 4
GND 4 — 0

M2

FADER LEVER

CN7F CN7M
GND
LUM(2)
GND
GND
SAT(1)
HUE(1)
LUM(1)
+5V
HUE(2)
SAT(2)

CN6F CN6M
D-CLIP(1)
GND
D-CLIP(2)
+5V

CN6F CN6M
E-CON4(1)
E-CON4(2)
E-CON3(2)
E-CON3(1)
E-CON2(2)
E-CON2(1)
E-CON1(2)
E-CON1(1)
+5V
GND

E-CLIP
X-CLIP
ATION-Z

RV1
10k

CN1F CN1M
+5V
HUE(2)
HUE(1)
SAT(2)
SAT(1)
LUM(2)
LUM(1)
GND ×3

HUE2
HUE1
SAT2
SAT1
LUM2
LUM1

HUE
SAT
LUM
RV1 10k
RV2 10k
RV3 10k
C1 4.7 16V AL
C2 0.1
C3 0.1
C4 0.1
C5 0.1
C6 0.1
C7 0.1
C8 0.1
C9 0.1
C10 0.1
C11 0.1

VR-137 BOARD

TITLE-CLIP
DRK-CLIP
LOCATION-Z

CN1F CN1M
+5V
A
B
GND

C1 4.7 16V AL
C2 0.1
C4 0.1
C5 0.1
RV1 10k

VR-135 BOARD

CN1F CN1M
+5V
E-CON4(2)
E-CON4(1)
E-CON3(2)
E-CON3(1)
E-CON2(2)
E-CON2(1)
E-CON1(2)
E-CON1(1)
GND

E-CON1
E-CON2
E-CON3
E-CON4
RV1 10k
RV2 10k
RV3 10k
RV4 10k
C1 4.7 16V AL
C2 0.1
C3 0.1
C4 0.1
C5 0.1
C6 0.1
C7 0.1
C8 0.1
C9 0.1
C10 0.1
C11 0.1
C13 0.1
C14 0.1

VR-138 BOARD

FRAME WIRING(3/3)

DFS-500
DFS-500P

H I J K L M N O P

SECTION 6
BOARD LAYOUTS

	Board	Function	Page
A	AC-111(For EK)	Line Filter	6-21
	AD-76	A/D Converter	6-2
C	CN-573	Rear Panel Connector	6-14
D	DA-63	D/A Converter	6-10
F	FM-29	Frame Synchronizer	6-4
K	KY-223	Function Key	6-18
	KY-225	Switch	6-20
	KY-226	Positioner	6-21
L	LE-55	Power Indicator	6-21
M	MB-385	Mother Board	6-16
	MY-54	Field Memory	6-6
P	PU-78	Address Operation	6-8
S	SY-172	System Control	6-12
V	VR-135	Location Control Title Control DSK(Down Stream Keyer) Control	6-21
	VR-136	Edge/Trail/Shadow Control	6-21
	VR-137	Mattes/BKGD Control	6-21
	VR-138	Effect Control	6-21

6-1

AD-76(1-644-602-12)

CN19	C-15	FL101	E-8	IC143	C-12	IC228	H-5	Q102	E-7	Q215	G-6	RV116	C-4	TP155	A-3
CN20	G-15	FL102	C-3	IC144	B-12	IC229	H-5	Q103	F-7	Q221	K-4	RV117	D-10	TP156	A-7
CN21	L-15	FL103	C-3	IC145	E-13	IC230	H-3	Q104	F-7	Q222	J-6	RV118	C-11	TP157	B-7
		FL111	D-9	IC146	D-13	IC231	G-6	Q105	E-7	Q223	K-8	RV119	B-11	TP158	A-8
CV101	C-7	FL112	C-9	IC147	C-13	IC232	G-6	Q106	E-6	Q224	K-9	RV121	D-12	TP159	A-6
CV201	L-7	FL113	D-9	IC148	D-13	IC233	K-5	Q107	C-4	Q225	K-9	RV122	C-12	TP160	A-7
		FL114	C-10	IC149	C-14	IC234	J-4	Q108	D-4	Q231	L-9	RV123	B-12	TP161	A-8
DL101	E-6	FL115	B-10	IC150	C-13	◎IC235	L-6	Q111	F-7	Q232	L-9	RV131	B-8	TP162	A-8
DL102	D-7	FL201	J-8	IC151	B-2	◎IC236	L-6	Q112	F-7	Q233	L-10	RV201	J-2	TP163	A-9
DL103	D-10	FL202	K-3	IC152	A-2	IC237	K-8	Q113	F-5	Q234	L-10	RV202	H-2	TP164	B-10
DL201	K-6	FL203	L-3	IC153	B-3	IC238	K-7	Q114	F-5	Q235	M-10	RV203	H-4	TP165	B-10
DL202	J-7	FL211	L-9	IC154	A-3	IC239	L-5	Q115	F-6	Q236	L-10	RV211	J-8	TP201	G-10
DL203	K-10	FL212	K-9	IC155	B-3	IC240	L-5	Q121	D-5	Q237	K-9	RV212	K-7	TP202	G-10
		FL213	J-9	IC156	A-4	IC241	K-5	Q122	D-6	Q238	L-9	RV213	L-7	TP203	G-10
D101	E-6	FL214	L-10	IC157	B-5	IC242	K-11	Q123	D-8	Q239	K-10	RV214	L-10	TP204	H-10
D102	F-4	FL215	K-10	IC158	A-4	IC243	L-12	Q124	E-9	Q240	L-10	RV215	K-10	TP205	H-10
D103	E-3			IC159	B-4	IC244	L-12	Q125	E-9	Q241	K-6	RV216	K-4	TP206	H-10
D106	C-6	IC1	A-13	IC160	B-4	IC245	K-13	Q131	C-9	Q251	K-10	RV217	J-11	TP211	H-6
D107	D-6	IC2	A-12	IC161	A-4	IC246	M-13	Q132	C-9	Q252	K-10	RV218	L-11	TP212	K-4
D111	D-12	IC3	A-12	IC162	A-5	IC247	K-13	Q133	D-10	Q253	J-11	RV219	K-11	TP213	L-4
D112	D-12	IC4	A-11	IC163	B-5	IC248	J-13	Q134	C-10	Q254	J-11	RV221	J-12	TP214	H-7
D113	C-12	IC101	F-13	IC164	A-6	IC249	L-13	Q135	D-10	Q255	L-11	RV222	L-12	TP215	G-6
D121	A-8	IC102	F-11	IC165	A-7	IC250	K-14	Q136	C-9	Q256	M-11	RV223	K-12	TP216	H-4
D122	B-9	IC103	F-13	IC166	A-7	IC251	N-5	Q137	B-9	Q257	M-11	RV231	N-11	TP217	G-3
D123	A-10	IC104	F-11	IC167	B-8	IC252	M-5	Q138	C-10	Q258	K-11	RV301	L-1	TP218	H-6
D124	A-9	IC105	F-13	IC168	A-6	IC253	N-6	Q139	C-10	Q259	L-11	RV302	H-13	TP221	J-5
D125	A-10	IC106	F-11	IC169	A-8	IC254	M-6	Q140	C-10	Q260	L-11			TP222	K-7
D126	A-10	IC107	E-13	IC170	B-8	IC255	N-7	Q141	B-6	Q271	J-12	S1	D-1	TP223	L-8
D201	J-6	IC108	E-11	IC171	A-7	IC256	M-7	Q151	D-10	Q272	J-12	S2	F-1	TP224	L-8
D202	G-4	IC109	E-13	IC172	A-8	IC257	N-8	Q152	D-10	Q273	J-12	S3	H-1	TP225	L-8
D203	J-3	IC110	E-11	IC173	B-6	IC258	M-7	Q153	E-11	Q274	L-12	S4	J-1	TP231	J-11
D206	L-6	IC111	E-13	IC174	B-6	IC259	M-7	Q154	D-11	Q275	L-12			TP232	L-11
D207	L-6	IC112	E-11	IC175	B-7	IC260	M-7	Q155	C-11	Q276	L-12	TP101	F-10	TP233	K-11
D211	K-12	IC113	J-10	IC176	A-9	IC261	M-8	Q156	D-11	Q277	K-12	TP102	F-10	TP241	J-12
D212	M-12	IC114	H-9	IC177	A-9	IC262	M-8	Q157	D-11	Q278	K-12	TP103	F-10	TP242	L-12
D213	L-12	IC115	H-9	IC178	B-10	IC263	M-8	Q158	C-11	Q279	K-12	TP104	E-10	TP243	K-13
D221	M-11	IC116	G-9	IC179	A-10	IC264	M-9	Q159	C-11	Q280	K-3	TP105	E-10	TP244	K-4
D222	N-13	IC117	G-9	IC201	F-13	IC265	M-10	Q160	C-11	Q291	M-6	TP106	E-10	TP251	M-6
D223	M-13	IC118	F-9	IC202	G-11	IC266	M-10	Q171	D-12	Q292	M-6	TP111	E-6	TP252	M-6
D224	M-13	IC119	E-9	IC203	G-13	IC267	N-11	Q172	D-12	Q293	M-13	TP112	C-4	TP253	M-8
D225	M-13	IC120	E-9	IC204	G-11	IC268	M-9	Q173	D-12	Q301	J-14	TP113	D-4	TP254	M-8
D226	M-13	IC121	F-8	IC205	G-13	IC269	M-11	Q174	C-12	Q302	H-14	TP114	F-7	TP255	M-6
D301	J-13	IC122	E-5	IC206	G-11	IC270	N-11	Q175	C-12	Q303	J-13	TP115	F-6	TP256	M-10
		IC123	F-4	IC207	G-13	IC271	N-9	Q176	C-12	Q304	J-13	TP116	G-4	TP257	M-10
E1	E-9	IC124	D-2	IC208	G-11	IC272	M-10	Q177	B-12	Q305	J-13	TP117	F-2	TP258	M-11
E2	J-10	IC125	D-3	IC209	H-13	IC273	M-9	Q178	B-12	Q306	H-13	TP118	F-6	TP259	M-9
E3	H-8	IC126	F-7	IC210	H-11	IC274	M-9	Q179	B-12	Q307	J-12	TP119	C-1	TP260	M-10
E4	G-14	IC127	F-5	IC211	H-13	IC275	N-10	Q180	D-4			TP121	D-5	TP261	M-11
E5	F-6	IC128	F-5	IC212	H-11	IC276	M-12	Q191	A-3	RB1	D-14	TP122	B-7	TP262	M-12
E6	G-2	IC129	F-4	IC213	J-9	IC277	M-12	Q192	B-3	RB2	C-14	TP123	D-8	TP263	M-13
E7	D-2	IC130	F-3	IC214	H-9	IC278	N-14	Q193	A-10	RB3	C-14	TP124	C-8	TP264	N-13
E8	D-6	IC131	F-6	IC215	H-9	IC279	M-14	Q201	J-7	RB101	K-14	TP125	D-8	TP265	N-13
E9	C-13	IC132	F-6	IC216	G-9	IC301	J-12	Q202	H-7	RB102	L-14	TP131	D-11	TP301	H-14
E10	B-3	IC133	D-5	IC217	G-9	IC302	J-11	Q203	J-7	RB103	K-14	TP132	C-11	TP302	J-13
E11	B-8	IC134	D-5	IC218	F-9			Q204	J-7			TP133	B-11	TP303	H-12
E12	J-6	◎IC135	C-6	IC219	E-9	LV101	B-10	Q205	H-7	RV101	E-2	TP141	D-13		
E13	J-4	◎IC136	C-6	IC220	E-9	LV201	N-13	Q206	H-6	RV102	E-2	TP142	C-12	X101	G-4
E14	K-2	IC137	B-8	IC222	H-5			Q207	K-4	RV103	F-4	TP143	B-12	X102	C-7
E15	L-4	IC138	B-7	IC223	J-4	PS1	B-14	Q208	L-4	RV111	D-8	TP144	D-4	X201	H-4
E16	L-13	IC139	C-5	IC224	K-3	PS2	B-14	Q211	H-8	RV112	C-7	TP151	A-3	X202	L-7
E17	L-6	IC140	C-5	IC225	J-2	PS3	E-14	Q212	G-7	RV113	C-7	TP152	A-3		
E18	M-9	IC141	B-5	IC226	H-7			Q213	H-5	RV114	C-10	TP153	A-5	◎:EK ONLY	
E19	C-1	IC142	D-12	IC227	G-5	Q101	E-7	Q214	H-5	RV115	B-10	TP154	A-5		

AD-76;A/D Converter

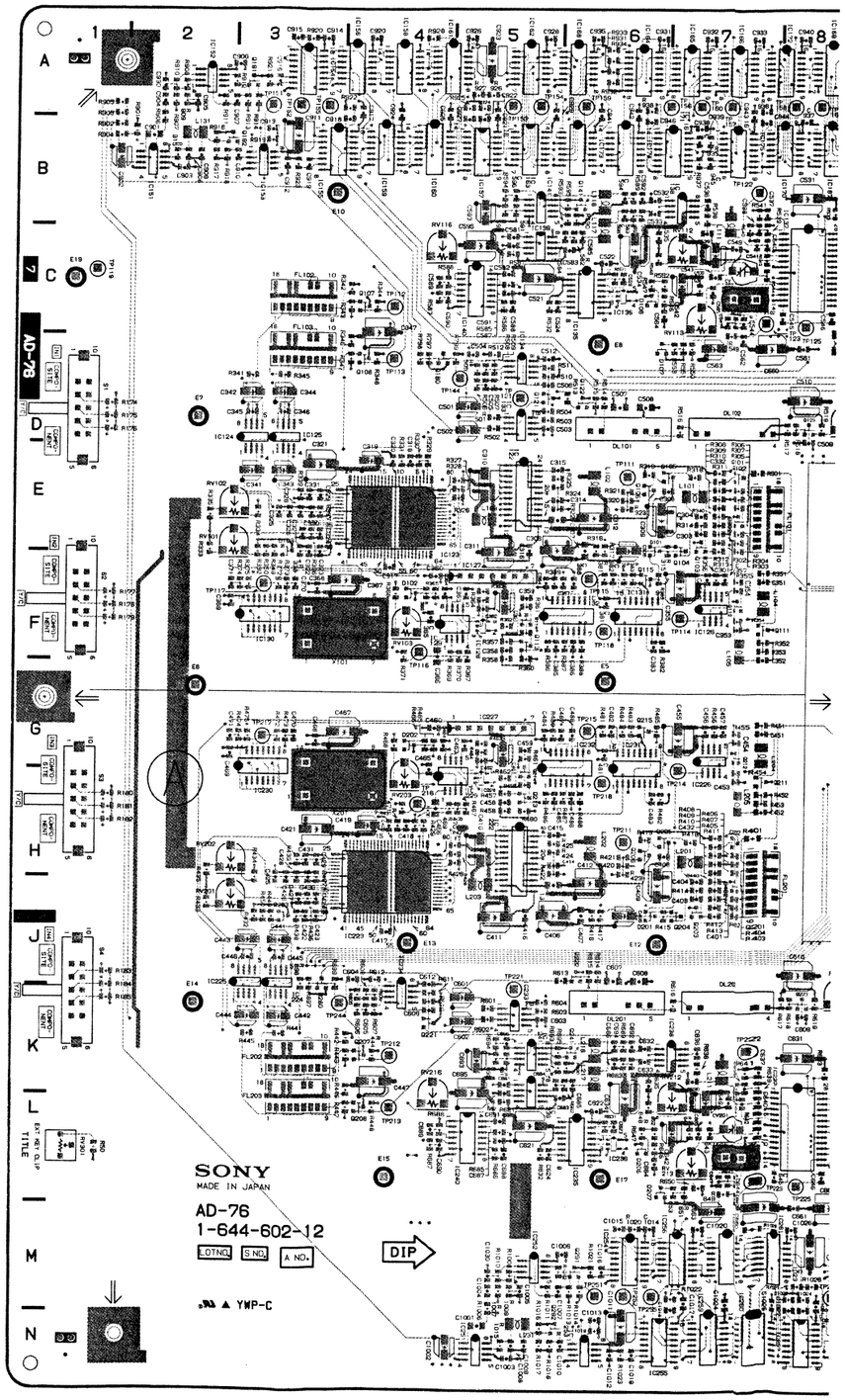

AD-76;A/D Converter

Q215	G-6	RV116	C-4	TP155	A-3
Q221	K-4	RV117	D-10	TP156	A-7
Q222	J-6	RV118	C-11	TP157	B-7
Q223	K-8	RV119	B-11	TP158	A-8
Q224	K-9	RV121	D-12	TP159	A-6
Q225	K-9	RV122	C-12	TP160	A-7
Q231	L-9	RV123	B-12	TP161	A-8
Q232	L-9	RV131	B-8	TP162	A-8
Q233	L-10	RV201	J-2	TP163	A-9
Q234	L-10	RV202	H-2	TP164	B-10
Q235	M-10	RV203	H-4	TP165	B-10
Q236	L-10	RV211	J-8	TP201	G-10
Q237	K-9	RV212	K-7	TP202	G-10
Q238	L-9	RV213	L-7	TP203	G-10
Q239	K-10	RV214	L-10	TP204	H-10
Q240	L-10	RV215	K-10	TP205	H-10
Q241	K-6	RV216	K-4	TP206	H-10
Q251	K-10	RV217	J-11	TP211	H-6
Q252	K-10	RV218	L-11	TP212	K-4
Q253	J-11	RV219	K-11	TP213	L-4
Q254	J-11	RV221	J-12	TP214	H-7
Q255	L-11	RV222	L-12	TP215	G-6
Q256	M-11	RV223	K-12	TP216	H-4
Q257	M-11	RV231	N-11	TP217	G-3
Q258	K-11	RV301	L-1	TP218	H-6
Q259	L-11	RV302	H-13	TP221	J-5
Q260	L-11			TP222	K-7
Q271	J-12	S1	D-1	TP223	L-8
Q272	J-12	S2	F-1	TP224	L-8
Q273	J-12	S3	H-1	TP225	L-8
Q274	L-12	S4	J-1	TP231	J-11
Q275	L-12			TP232	L-11
Q276	L-12	TP101	F-10	TP233	K-11
Q277	K-12	TP102	F-10	TP241	J-12
Q278	K-12	TP103	F-10	TP242	L-12
Q279	K-12	TP104	E-10	TP243	K-13
Q280	K-3	TP105	E-10	TP244	K-4
Q291	M-6	TP106	E-10	TP251	M-6
Q292	M-6	TP111	E-6	TP252	M-6
Q293	M-13	TP112	C-4	TP253	M-8
Q301	J-14	TP113	D-4	TP254	M-8
Q302	H-14	TP114	F-7	TP255	M-6
Q303	J-13	TP115	F-6	TP256	M-10
Q304	J-13	TP116	G-4	TP257	M-10
Q305	J-13	TP117	F-2	TP258	M-11
Q306	H-13	TP118	F-6	TP259	M-9
Q307	J-12	TP119	C-1	TP260	M-10
		TP121	D-5	TP261	M-11
RB1	D-14	TP122	B-7	TP262	M-12
RB2	C-14	TP123	D-8	TP263	M-13
RB3	C-14	TP124	C-8	TP264	N-13
RB101	K-14	TP125	D-8	TP265	N-13
RB102	L-14	TP131	D-11	TP301	H-14
RB103	K-14	TP132	C-11	TP302	J-13
		TP133	B-11	TP303	H-12
RV101	E-2	TP141	D-13		
RV102	E-2	TP142	C-12	X101	G-4
RV103	F-4	TP143	B-12	X102	C-7
RV111	D-8	TP144	D-4	X201	H-4
RV112	C-7	TP151	A-3	X202	L-7
RV113	C-7	TP152	A-3		
RV114	C-10	TP153	A-5	◎:EK ONLY	
RV115	B-10	TP154	A-5		

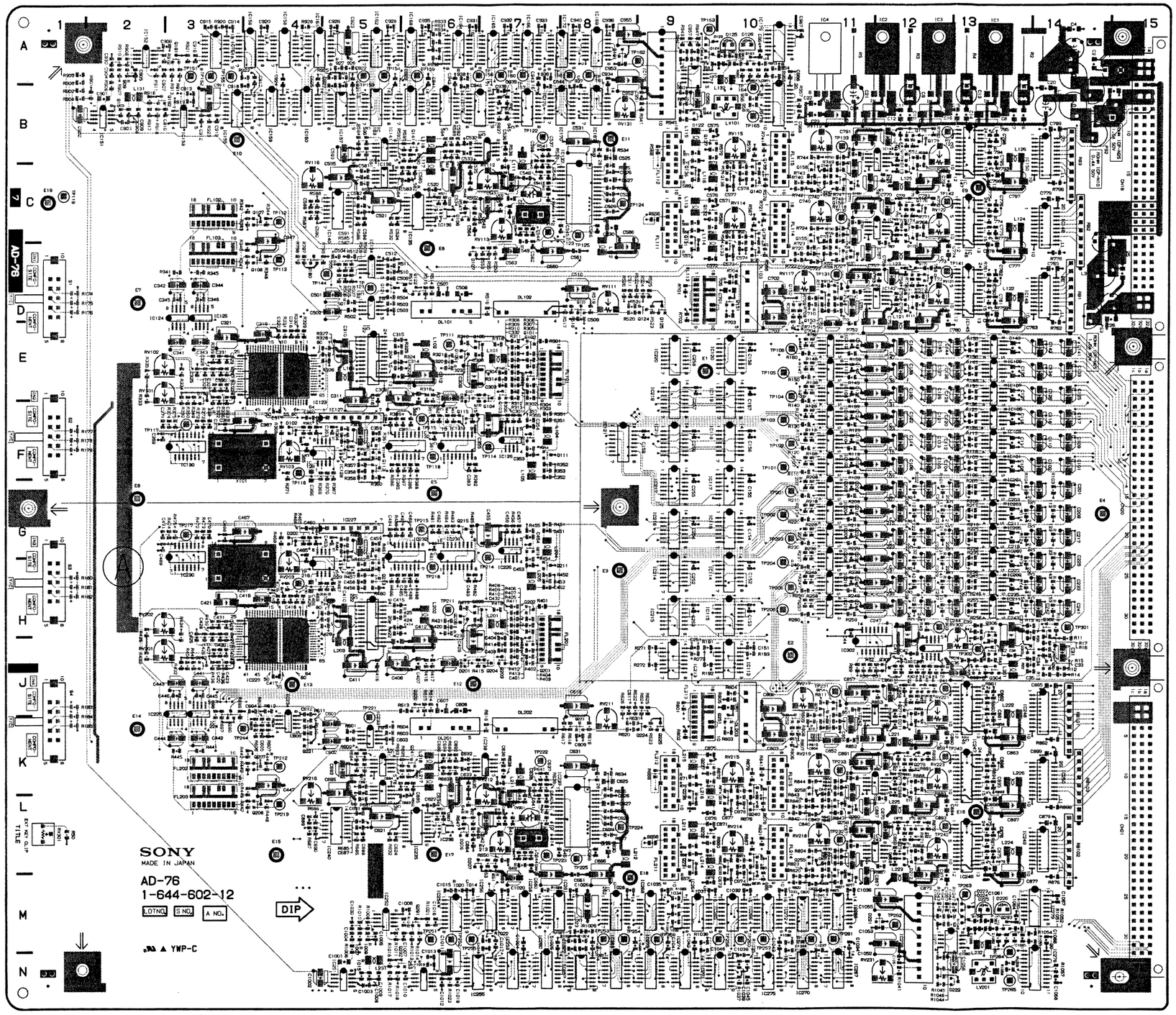

AD-76 -A SIDE-
1-644-602-11,12
DFS-500/500P

AD-76;A/D Converter

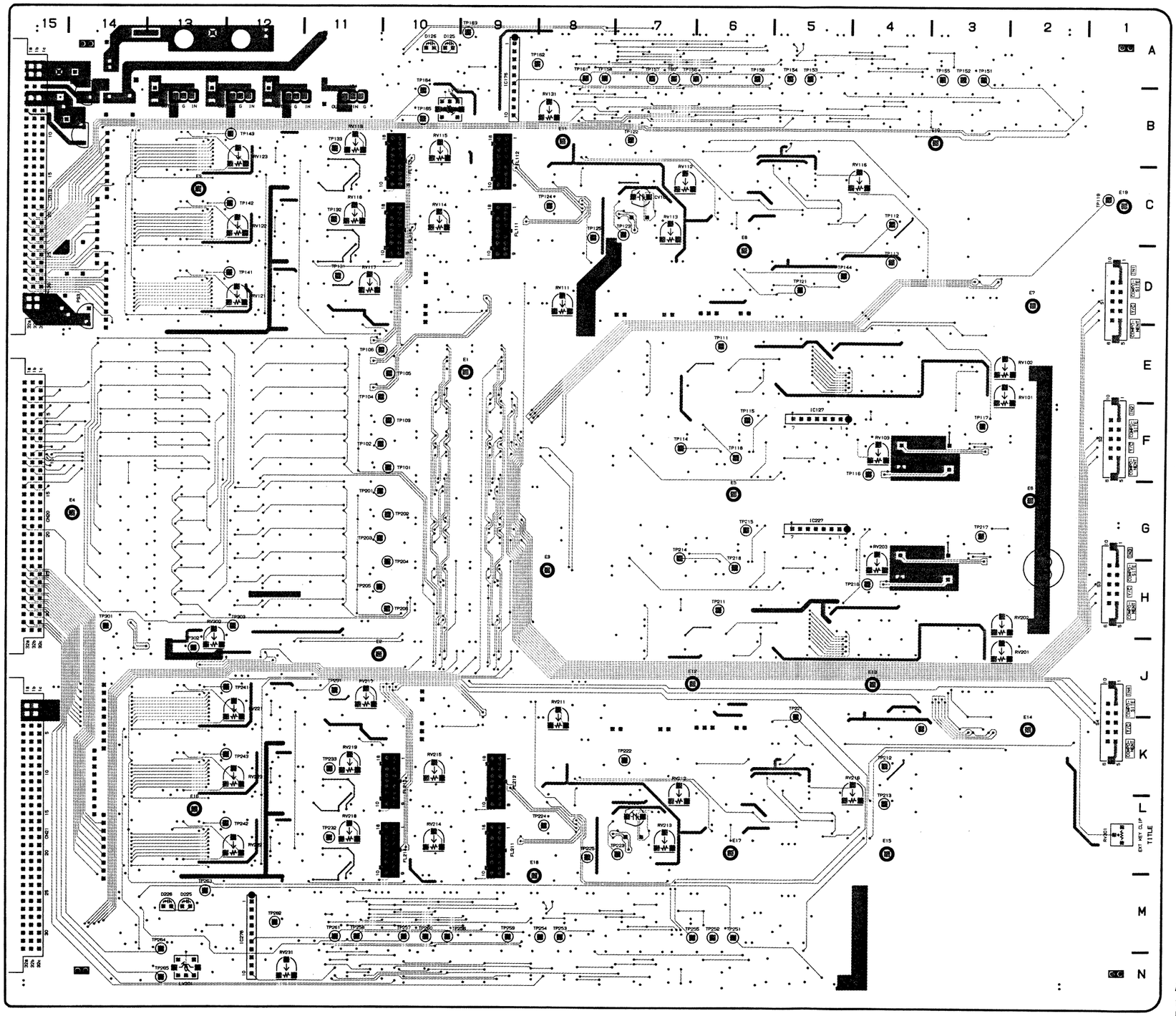

AD-76 -B SIDE-
1-644-602-11,12
DFS-500/500P

AD-76(1-644-602-12)

CN19	C-15	FL101	E-8	IC14
CN20	G-15	FL102	C-3	IC14
CN21	L-15	FL103	C-3	IC14
		FL111	D-9	IC14
CV101	C-7	FL112	C-9	IC14
CV201	L-7	FL113	D-9	IC14
		FL114	C-10	IC14
DL101	E-6	FL115	B-10	IC15
DL102	D-7	FL201	J-8	IC15
DL103	D-10	FL202	K-3	IC15
DL201	K-6	FL203	L-3	IC15
DL202	J-7	FL211	L-9	IC15
DL203	K-10	FL212	K-9	IC15
		FL213	J-9	IC15
D101	E-6	FL214	L-10	IC15
D102	F-4	FL215	K-10	IC15
D103	E-3			IC15
D106	C-6	IC1	A-13	IC16
D107	D-6	IC2	A-12	IC16
D111	D-12	IC3	A-12	IC16
D112	D-12	IC4	A-11	IC16
D113	C-12	IC101	F-13	IC16
D121	A-8	IC102	F-11	IC16
D122	B-9	IC103	F-13	IC16
D123	A-10	IC104	F-11	IC16
D124	A-9	IC105	F-13	IC16
D125	A-10	IC106	F-11	IC16
D126	A-10	IC107	E-13	IC17
D201	J-6	IC108	E-11	IC17
D202	G-4	IC109	E-13	IC17
D203	J-3	IC110	E-11	IC17
D206	L-6	IC111	E-13	IC17
D207	L-6	IC112	E-11	IC17
D211	K-12	IC113	J-10	IC17
D212	M-12	IC114	H-9	IC17
D213	L-12	IC115	H-9	IC17
D221	M-11	IC116	G-9	IC17
D222	N-13	IC117	G-9	IC20
D223	M-13	IC118	F-9	IC20
D224	M-13	IC119	E-9	IC20
D225	M-13	IC120	E-9	IC20
D226	M-13	IC121	F-8	IC20
D301	J-13	IC122	E-5	IC20
		IC123	F-4	IC20
E1	E-9	IC124	D-2	IC20
E2	J-10	IC125	D-3	IC20
E3	H-8	IC126	F-7	IC21
E4	G-14	IC127	F-5	IC21
E5	F-6	IC128	F-5	IC21
E6	G-2	IC129	F-4	IC21
E7	D-2	IC130	F-3	IC21
E8	D-6	IC131	F-6	IC21
E9	C-13	IC132	F-6	IC21
E10	B-3	IC133	D-5	IC21
E11	B-8	IC134	D-5	IC21
E12	J-6	◎IC135	C-6	IC21
E13	J-4	◎IC136	C-6	IC22
E14	K-2	IC137	B-8	IC22
E15	L-4	IC138	B-7	IC22
E16	L-13	IC139	C-5	IC22
E17	L-6	IC140	C-5	IC22
E18	M-9	IC141	B-5	IC22
E19	C-1	IC142	D-12	IC22

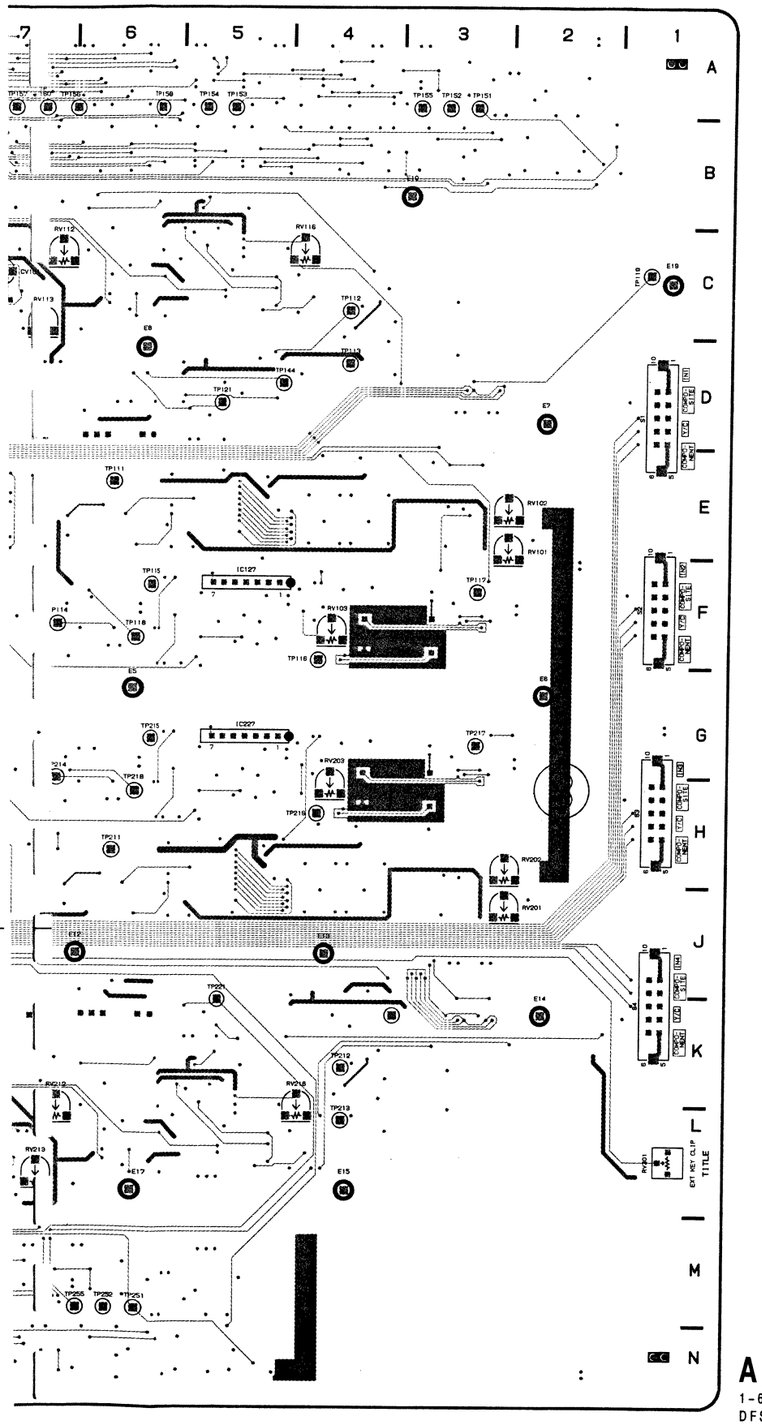

AD-76 -B SIDE-
1-644-602-11,12
DFS-500/500P

AD-76(1-644-602-12)

CN19	C-15	FL101	E-8	IC143	C-12	IC228	H-5	Q102	E-7	Q215	G-6	RV116	C-4	TP155	A-3
CN20	G-15	FL102	C-3	IC144	B-12	IC229	H-5	Q103	F-7	Q221	K-4	RV117	D-10	TP156	A-7
CN21	L-15	FL103	C-3	IC145	E-13	IC230	H-3	Q104	F-7	Q222	J-6	RV118	C-11	TP157	B-7
		FL111	D-9	IC146	D-13	IC231	G-6	Q105	E-7	Q223	K-8	RV119	B-11	TP158	A-8
CV101	C-7	FL112	C-9	IC147	C-13	IC232	G-6	Q106	E-6	Q224	K-9	RV121	D-12	TP159	A-6
CV201	L-7	FL113	D-9	IC148	D-13	IC233	K-5	Q107	C-4	Q225	K-9	RV122	C-12	TP160	A-7
		FL114	C-10	IC149	C-14	IC234	J-4	Q108	D-4	Q231	L-9	RV123	B-12	TP161	A-8
DL101	E-6	FL115	B-10	IC150	C-13	◎IC235	L-6	Q111	F-7	Q232	L-9	RV131	B-8	TP162	A-8
DL102	D-7	FL201	J-8	IC151	B-2	◎IC236	L-6	Q112	F-7	Q233	L-10	RV201	J-2	TP163	A-9
DL103	D-10	FL202	K-3	IC152	A-2	IC237	K-8	Q113	F-5	Q234	L-10	RV202	H-2	TP164	B-10
DL201	K-6	FL203	L-3	IC153	B-3	IC238	K-7	Q114	F-5	Q235	M-10	RV203	H-4	TP165	B-10
DL202	J-7	FL211	L-9	IC154	A-3	IC239	L-5	Q115	F-6	Q236	L-10	RV211	J-8	TP201	G-10
DL203	K-10	FL212	K-9	IC155	B-3	IC240	L-5	Q121	D-5	Q237	K-9	RV212	K-7	TP202	G-10
		FL213	J-9	IC156	A-4	IC241	K-5	Q122	D-6	Q238	L-9	RV213	L-7	TP203	G-10
D101	E-6	FL214	L-10	IC157	B-5	IC242	K-11	Q123	D-8	Q239	K-10	RV214	L-10	TP204	H-10
D102	F-4	FL215	K-10	IC158	A-4	IC243	L-12	Q124	E-9	Q240	L-10	RV215	K-10	TP205	H-10
D103	E-3			IC159	B-4	IC244	L-12	Q125	E-9	Q241	K-6	RV216	K-4	TP206	H-10
D106	C-6	IC1	A-13	IC160	B-4	IC245	K-13	Q131	C-9	Q251	K-10	RV217	J-11	TP211	H-6
D107	D-6	IC2	A-12	IC161	A-4	IC246	M-13	Q132	C-9	Q252	K-10	RV218	L-11	TP212	K-4
D111	D-12	IC3	A-12	IC162	A-5	IC247	K-13	Q133	D-10	Q253	J-11	RV219	K-11	TP213	L-4
D112	D-12	IC4	A-11	IC163	B-5	IC248	J-13	Q134	C-10	Q254	J-11	RV221	J-12	TP214	H-7
D113	C-12	IC101	F-13	IC164	A-6	IC249	L-13	Q135	D-10	Q255	L-11	RV222	L-12	TP215	G-6
D121	A-8	IC102	F-11	IC165	A-7	IC250	K-14	Q136	C-9	Q256	M-11	RV223	K-12	TP216	H-4
D122	B-9	IC103	F-13	IC166	A-7	IC251	N-5	Q137	B-9	Q257	M-11	RV231	N-11	TP217	G-3
D123	A-10	IC104	F-11	IC167	B-8	IC252	M-5	Q138	C-10	Q258	K-11	RV301	L-1	TP218	H-6
D124	A-9	IC105	F-13	IC168	A-6	IC253	N-6	Q139	C-10	Q259	L-11	RV302	H-13	TP221	J-5
D125	A-10	IC106	F-11	IC169	A-8	IC254	M-6	Q140	C-10	Q260	L-11			TP222	K-7
D126	A-10	IC107	E-13	IC170	B-8	IC255	N-7	Q141	B-6	Q271	J-12	S1	D-1	TP223	L-8
D201	J-6	IC108	E-11	IC171	A-7	IC256	M-7	Q151	D-10	Q272	J-12	S2	F-1	TP224	L-8
D202	G-4	IC109	E-13	IC172	A-8	IC257	N-8	Q152	D-10	Q273	J-12	S3	H-1	TP225	L-8
D203	J-3	IC110	E-11	IC173	B-6	IC258	M-7	Q153	E-11	Q274	L-12	S4	J-1	TP231	J-11
D206	L-6	IC111	E-13	IC174	B-6	IC259	M-7	Q154	D-11	Q275	L-12			TP232	L-11
D207	L-6	IC112	E-11	IC175	B-7	IC260	M-7	Q155	C-11	Q276	L-12	TP101	F-10	TP233	K-11
D211	K-12	IC113	J-10	IC176	A-9	IC261	M-8	Q156	D-11	Q277	K-12	TP102	F-10	TP241	J-12
D212	M-12	IC114	H-9	IC177	A-9	IC262	M-8	Q157	D-11	Q278	K-12	TP103	F-10	TP242	L-12
D213	L-12	IC115	H-9	IC178	B-10	IC263	M-8	Q158	C-11	Q279	K-12	TP104	E-10	TP243	K-13
D221	M-11	IC116	G-9	IC179	A-10	IC264	M-9	Q159	C-11	Q280	K-3	TP105	E-10	TP244	K-4
D222	N-13	IC117	G-9	IC201	F-13	IC265	M-10	Q160	C-11	Q291	M-6	TP106	E-10	TP251	M-6
D223	M-13	IC118	F-9	IC202	G-11	IC266	M-10	Q171	D-12	Q292	M-6	TP111	E-6	TP252	M-6
D224	M-13	IC119	E-9	IC203	G-13	IC267	N-11	Q172	D-12	Q293	M-13	TP112	C-4	TP253	M-8
D225	M-13	IC120	E-9	IC204	G-11	IC268	M-9	Q173	D-12	Q301	J-14	TP113	D-4	TP254	M-8
D226	M-13	IC121	F-8	IC205	G-13	IC269	M-11	Q174	C-12	Q302	H-14	TP114	F-7	TP255	M-6
D301	J-13	IC122	E-5	IC206	G-11	IC270	N-11	Q175	C-12	Q303	J-13	TP115	F-6	TP256	M-10
		IC123	F-4	IC207	G-13	IC271	N-9	Q176	C-12	Q304	J-13	TP116	G-4	TP257	M-10
E1	E-9	IC124	D-2	IC208	G-11	IC272	M-10	Q177	B-12	Q305	J-13	TP117	F-2	TP258	M-11
E2	J-10	IC125	D-3	IC209	H-13	IC273	M-9	Q178	B-12	Q306	H-13	TP118	F-6	TP259	M-9
E3	H-8	IC126	F-7	IC210	H-11	IC274	M-9	Q179	B-12	Q307	J-12	TP119	C-1	TP260	M-10
E4	G-14	IC127	F-5	IC211	H-13	IC275	N-10	Q180	D-4			TP121	D-5	TP261	M-11
E5	F-6	IC128	F-5	IC212	H-11	IC276	M-12	Q191	A-3	RB1	D-14	TP122	B-7	TP262	M-12
E6	G-2	IC129	F-4	IC213	J-9	IC277	M-12	Q192	B-3	RB2	C-14	TP123	D-8	TP263	M-13
E7	D-2	IC130	F-3	IC214	H-9	IC278	N-14	Q193	A-10	RB3	C-14	TP124	C-8	TP264	N-13
E8	D-6	IC131	F-6	IC215	H-9	IC279	M-14	Q201	J-7	RB101	K-14	TP125	D-8	TP265	N-13
E9	C-13	IC132	F-6	IC216	G-9	IC301	J-12	Q202	H-7	RB102	L-14	TP131	D-11	TP301	H-14
E10	B-3	IC133	D-5	IC217	G-9	IC302	J-11	Q203	J-7	RB103	K-14	TP132	C-11	TP302	J-13
E11	B-8	IC134	D-5	IC218	F-9			Q204	J-7			TP133	B-11	TP303	H-12
E12	J-6	◎IC135	C-6	IC219	E-9	LV101	B-10	Q205	H-7	RV101	E-2	TP141	D-13		
E13	J-4	◎IC136	C-6	IC220	E-9	LV201	N-13	Q206	H-6	RV102	E-2	TP142	C-12	X101	G-4
E14	K-2	IC137	B-8	IC222	H-5			Q207	K-4	RV103	F-4	TP143	B-12	X102	C-7
E15	L-4	IC138	B-7	IC223	J-4	PS1	B-14	Q208	L-4	RV111	D-8	TP144	D-4	X201	H-4
E16	L-13	IC139	C-5	IC224	K-3	PS2	B-14	Q211	H-8	RV112	C-7	TP151	A-3	X202	L-7
E17	L-6	IC140	C-5	IC225	J-2	PS3	E-14	Q212	G-7	RV113	C-7	TP152	A-3		
E18	M-9	IC141	B-5	IC226	H-7			Q213	H-5	RV114	C-10	TP153	A-5	◎:EK ONLY	
E19	C-1	IC142	D-12	IC227	G-5	Q101	E-7	Q214	H-5	RV115	B-10	TP154	A-5		

FM-29;Frame Synchronizer

FM-29(1-644-600-11)

CNI107	J-10	IC41	G-5	IC97	D-4
		IC42	F-5	IC98	H-1
CN13	N-2	IC43	G-6	IC99	J-1
CN14	N-6	IC44	F-6	IC100	M-2
CN15	N-9	IC45	M-7	IC101	K-1
		IC46	L-8	IC102	L-1
E1	G-1	IC47	M-8	IC103	L-1
E2	N-1	IC48	L-10	IC104	M-1
E3	B-3	IC49	M-10	IC105	M-1
E4	N-5	IC50	L-7	IC106	L-11
E5	G-6	IC51	K-7	IC107	J-10
E6	B-6	IC52	H-8	IC108	H-10
E7	B-10	IC53	H-7	IC109	G-11
E8	G-10	IC54	G-7	IC110	F-11
E9	M-10	IC55	G-8	IC111	E-11
		IC56	F-7	IC112	D-11
IC1	M-4	IC57	G-7	IC113	C-11
IC2	M-4	IC58	F-7	IC114	E-10
IC3	L-4	IC59	F-8	IC115	F-9
IC4	L-4	IC60	E-7	IC116	M-11
IC5	J-4	IC61	G-8	IC117	K-10
IC6	J-4	IC62	G-9	IC118	L-10
IC7	H-4	IC63	F-9	IC119	M-10
IC8	J-3	IC64	F-8	IC120	M-10
IC9	H-4	IC65	E-8	IC121	C-10
IC10	M-3	IC66	E-8	IC122	L-3
IC11	J-3	IC67	L-9	IC123	L-6
IC12	H-3	IC68	M-9	IC201	K-7
IC13	L-3	IC69	L-9	IC202	A-5
IC14	M-3	IC70	M-9	IC203	A-5
IC15	L-2	IC71	L-8	IC204	L-2
IC16	M-2	IC72	M-8	IC205	H-5
IC17	G-1	IC73	K-8	IC206	K-2
IC18	F-1	IC74	K-8		
IC19	G-2	IC75	C-8	PS1	N-3
IC20	F-2	IC76	D-8		
IC21	G-3	IC77	A-7	RB1	H-3
IC22	F-3	IC78	D-7	RB2	B-9
IC23	M-6	IC79	C-7	RB3	A-6
IC24	M-6	IC80	D-7		
IC25	L-6	IC81	B-7	S1	H-3
IC26	L-6	IC82	C-8	S2	J-3
IC27	K-6	IC83	D-8	S3	A-10
IC28	J-6	IC84	C-7	S4	A-9
IC29	H-6	IC85	D-6	S5	A-9
IC30	J-5	IC86	D-5		
IC31	H-5	IC87	D-5	TP1	J-5
IC32	M-6	IC88	D-4	TP2	L-4
IC33	J-6	IC89	D-6	TP3	K-4
IC34	H-6	IC90	D-6	TP4	J-7
IC35	L-5	IC91	B-6	TP5	L-7
IC36	M-5	IC92	C-6	TP6	K-6
IC37	L-5	IC93	C-5	TP7	H-7
IC38	M-5	IC94	C-5	TP8	H-7
IC39	G-4	IC95	C-4	TP9	K-7
IC40	F-4	IC96	C-4		

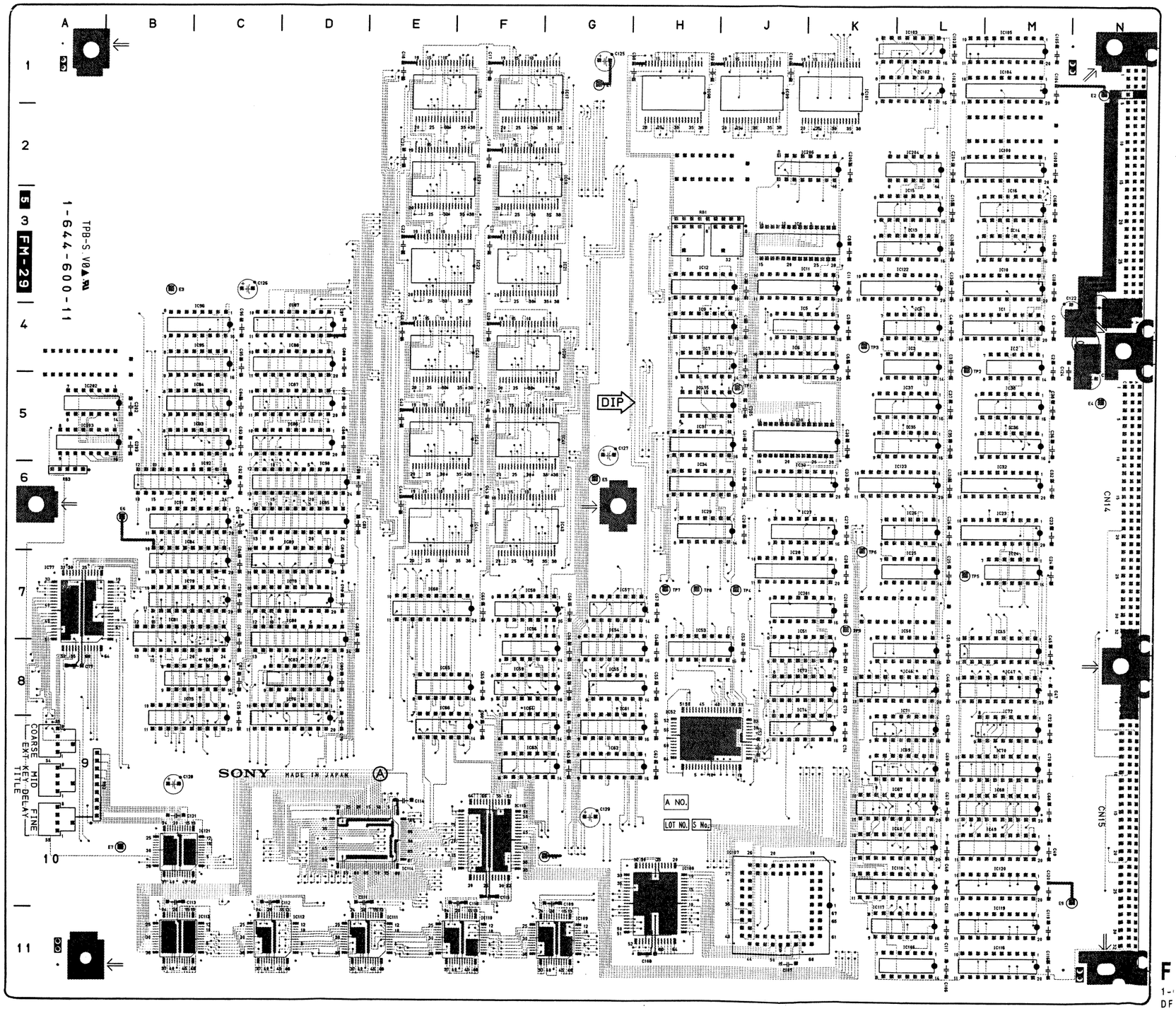

hi nizer

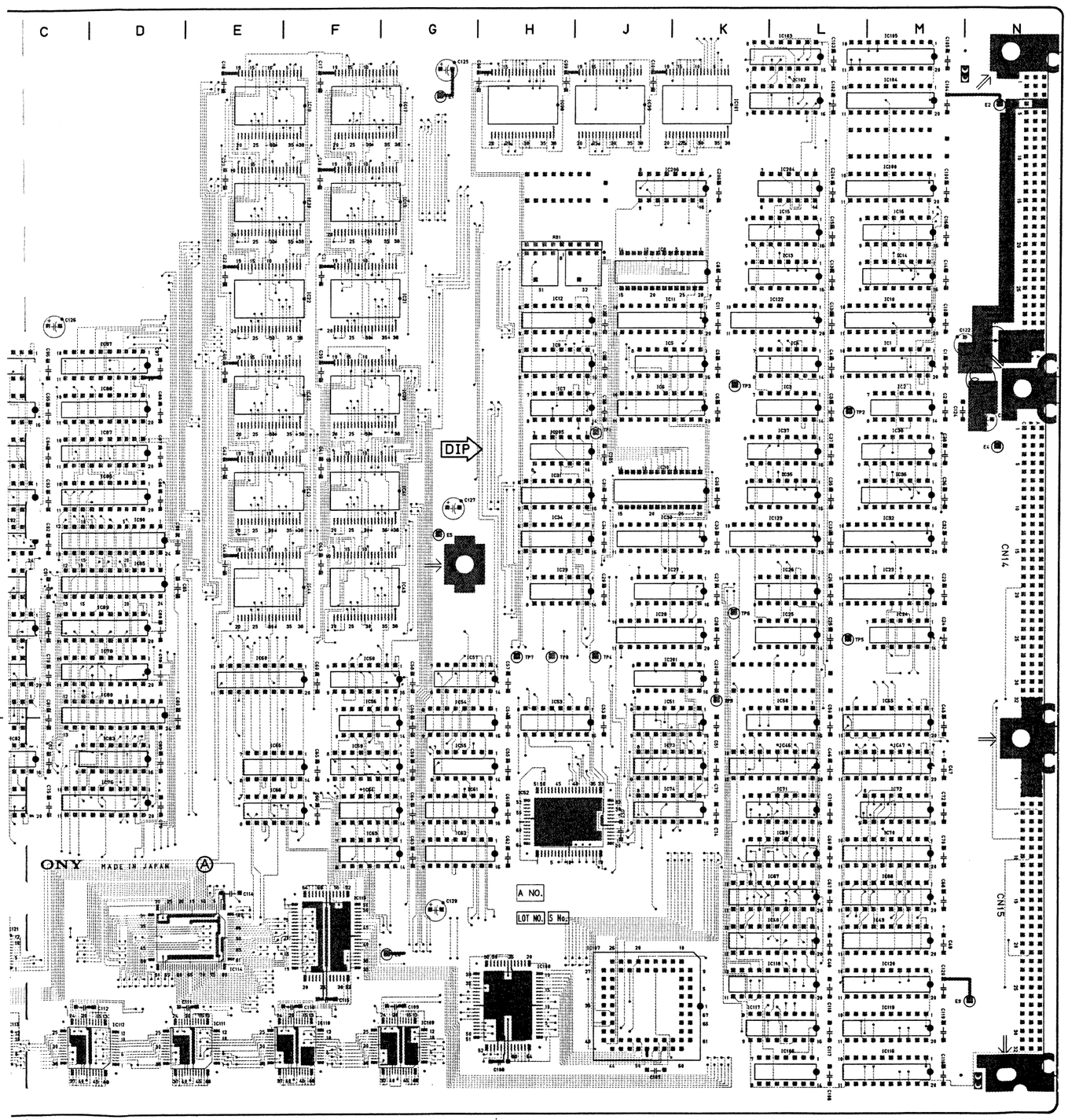

FM-29 -A SIDE-

1-644-600-11

DFS-500/500P

FM-29;Frame Synchronizer

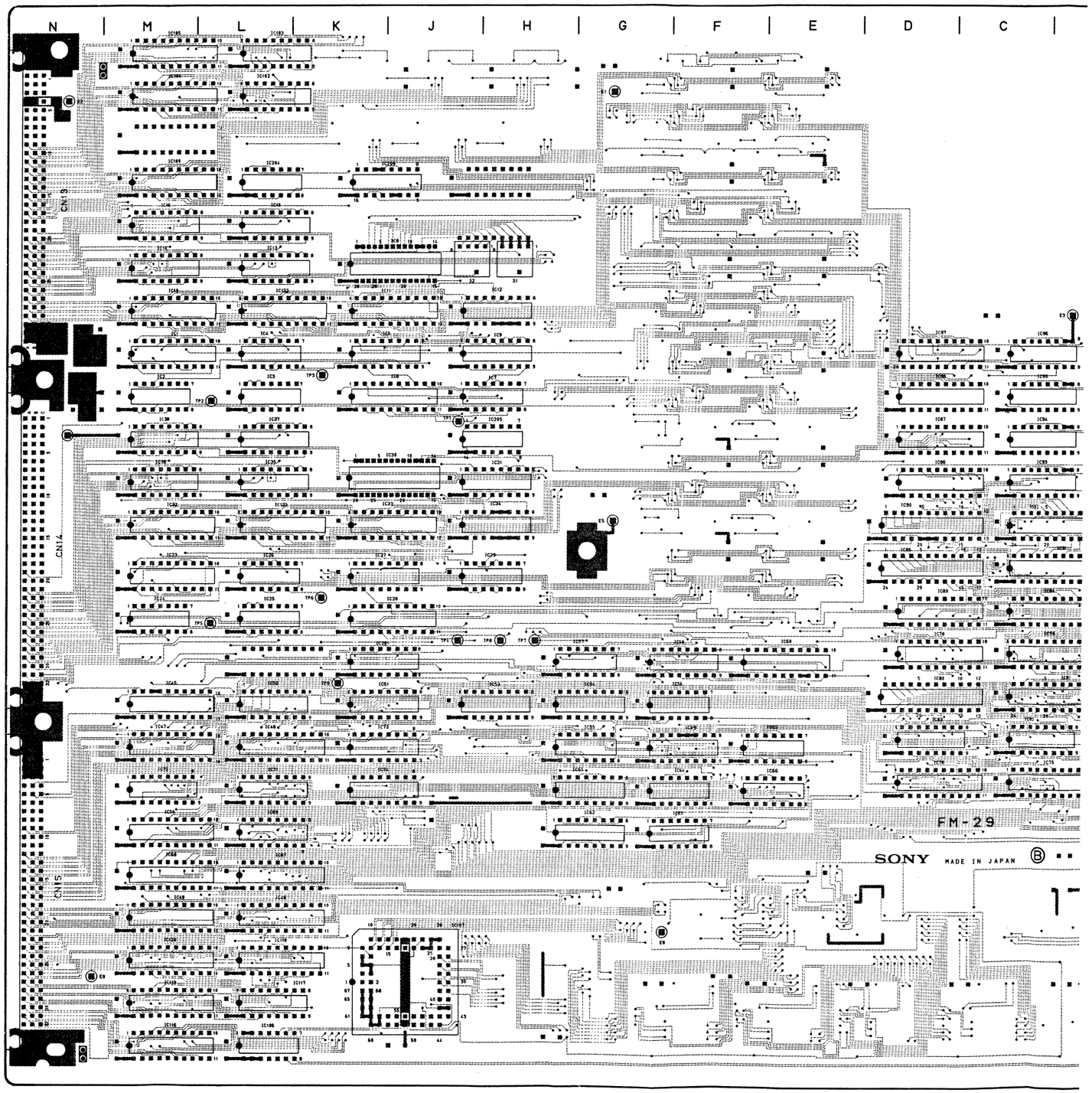

M-29;Frame Synchronizer

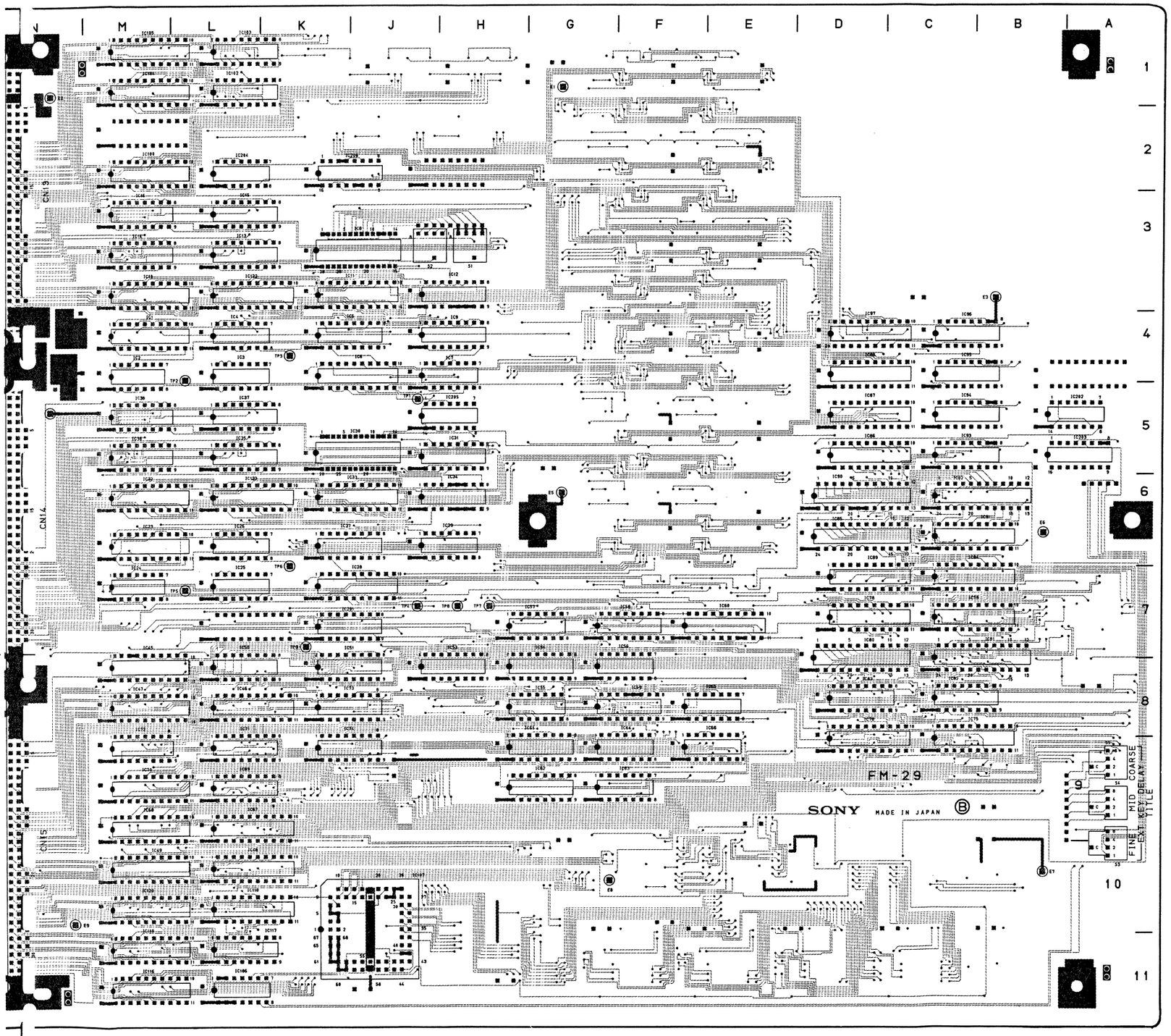

FM-29(1-644-600-11)

CNI107	J-10	IC41	G-5	IC97	D-4
		IC42	F-5	IC98	H-1
CN13	N-2	IC43	G-6	IC99	J-1
CN14	N-6	IC44	F-6	IC100	M-2
CN15	N-9	IC45	M-7	IC101	K-1
		IC46	L-8	IC102	L-1
E1	G-1	IC47	M-8	IC103	L-1
E2	N-1	IC48	L-10	IC104	M-1
E3	B-3	IC49	M-10	IC105	M-1
E4	N-5	IC50	L-7	IC106	L-11
E5	G-6	IC51	K-7	IC107	J-10
E6	B-6	IC52	H-8	IC108	H-10
E7	B-10	IC53	H-7	IC109	G-11
E8	G-10	IC54	G-7	IC110	F-11
E9	M-10	IC55	G-8	IC111	E-11
		IC56	F-7	IC112	D-11
IC1	M-4	IC57	G-7	IC113	C-11
IC2	M-4	IC58	F-7	IC114	E-10
IC3	L-4	IC59	F-8	IC115	F-9
IC4	L-4	IC60	E-7	IC116	M-11
IC5	J-4	IC61	G-8	IC117	K-10
IC6	J-4	IC62	G-9	IC118	L-10
IC7	H-4	IC63	F-9	IC119	M-10
IC8	J-3	IC64	F-8	IC120	M-10
IC9	H-4	IC65	E-8	IC121	C-10
IC10	M-3	IC66	E-8	IC122	L-3
IC11	J-3	IC67	L-9	IC123	L-6
IC12	H-3	IC68	M-9	IC201	K-7
IC13	L-3	IC69	L-9	IC202	A-5
IC14	M-3	IC70	M-9	IC203	A-5
IC15	L-2	IC71	L-8	IC204	L-2
IC16	M-2	IC72	M-8	IC205	H-5
IC17	G-1	IC73	K-8	IC206	K-2
IC18	F-1	IC74	K-8		
IC19	G-2	IC75	C-8	PS1	N-3
IC20	F-2	IC76	D-8		
IC21	G-3	IC77	A-7	RB1	H-3
IC22	F-3	IC78	D-7	RB2	B-9
IC23	M-6	IC79	C-7	RB3	A-6
IC24	M-6	IC80	D-7		
IC25	L-6	IC81	B-7	S1	H-3
IC26	L-6	IC82	C-8	S2	J-3
IC27	K-6	IC83	D-8	S3	A-10
IC28	J-6	IC84	C-7	S4	A-9
IC29	H-6	IC85	D-6	S5	A-9
IC30	J-5	IC86	D-5		
IC31	H-5	IC87	D-5	TP1	J-5
IC32	M-6	IC88	D-4	TP2	L-4
IC33	J-6	IC89	D-6	TP3	K-4
IC34	H-6	IC90	D-6	TP4	J-7
IC35	L-5	IC91	B-6	TP5	L-7
IC36	M-5	IC92	C-6	TP6	K-6
IC37	L-5	IC93	C-5	TP7	H-7
IC38	M-5	IC94	C-5	TP8	H-7
IC39	G-4	IC95	C-4	TP9	K-7
IC40	F-4	IC96	C-4		

FM-29 -B SIDE-

1-644-600-11

DFS-500/500P

MY-54(1-644-599-11)

CN7	N-2	IC41	E-5	IC94	H-2
CN8	N-6	IC42	E-4	IC95	G-3
CN9	N-9	IC43	C-6	IC96	M-4
		IC44	C-6	IC97	M-3
E1	M-11	IC45	D-6	IC98	M-1
E2	M-6	IC46	D-6	IC99	K-1
E3	M-1	IC47	C-7	IC100	J-1
E4	H-10	IC48	D-7	IC101	M-2
E5	H-7	IC49	D-7	IC102	G-2
E6	G-1	IC50	E-7	IC103	H-2
E7	A-11	IC51	C-9	IC104	K-3
E8	A-7	IC52	C-8	IC105	L-3
E9	A-1	IC53	D-9	IC106	G-3
		IC54	D-8	IC107	D-10
IC1	M-9	IC55	B-5	IC108	D-11
IC2	M-9	IC56	B-7	IC109	B-10
IC3	L-11	IC57	F-2	IC110	C-11
IC4	L-10	IC58	F-3	IC111	J-3
IC5	L-9	IC59	D-2	IC112	H-3
IC6	K-10	IC60	D-1	IC113	L-10
IC7	K-10	IC61	E-2		
IC8	K-11	IC62	E-1	PS1	N-4
IC10	K-9	IC63	D-4		
IC11	H-9	IC64	D-3	RB1	M-5
IC12	M-9	IC65	E-4	RB2	M-5
IC13	N-8	IC66	E-3	RB3	M-6
IC14	M-10	IC67	B-4	RB4	N-6
IC15	L-11	IC68	B-2	RB5	M-7
IC16	D-10	IC69	L-5	RB6	N-7
IC17	E-10	IC70	L-6	RB7	M-8
IC18	J-11	IC71	L-7	RB8	N-8
IC19	H-11	IC72	L-8	RB10	A-11
IC20	J-10	IC73	K-5	RB11	A-11
IC21	G-9	IC74	K-5	RB12	N-3
IC22	G-10	IC75	J-5		
IC23	E-10	IC76	J-5	TP1	M-8
IC24	C-10	IC77	K-6	TP2	M-11
IC25	B-10	IC78	K-6	TP3	G-10
IC26	C-9	IC79	J-6	TP4	G-10
IC27	B-9	IC80	J-6	TP5	G-10
IC28	J-9	IC81	K-8	TP6	A-9
IC29	B-9	IC82	K-7	TP7	B-9
IC30	B-9	IC83	J-8	TP8	B-9
IC31	B-8	IC84	J-7	TP9	M-1
IC32	E-9	IC85	K-9	TP10	N-1
IC33	D-9	IC86	K-8		
IC34	D-9	IC87	J-9		
IC35	F-4	IC88	J-8		
IC36	F-6	IC89	K-3		
IC37	F-7	IC90	J-4		
IC38	F-8	IC91	L-2		
IC39	C-5	IC92	K-2		
IC40	C-4	IC93	J-2		

MY-54;Field Memory

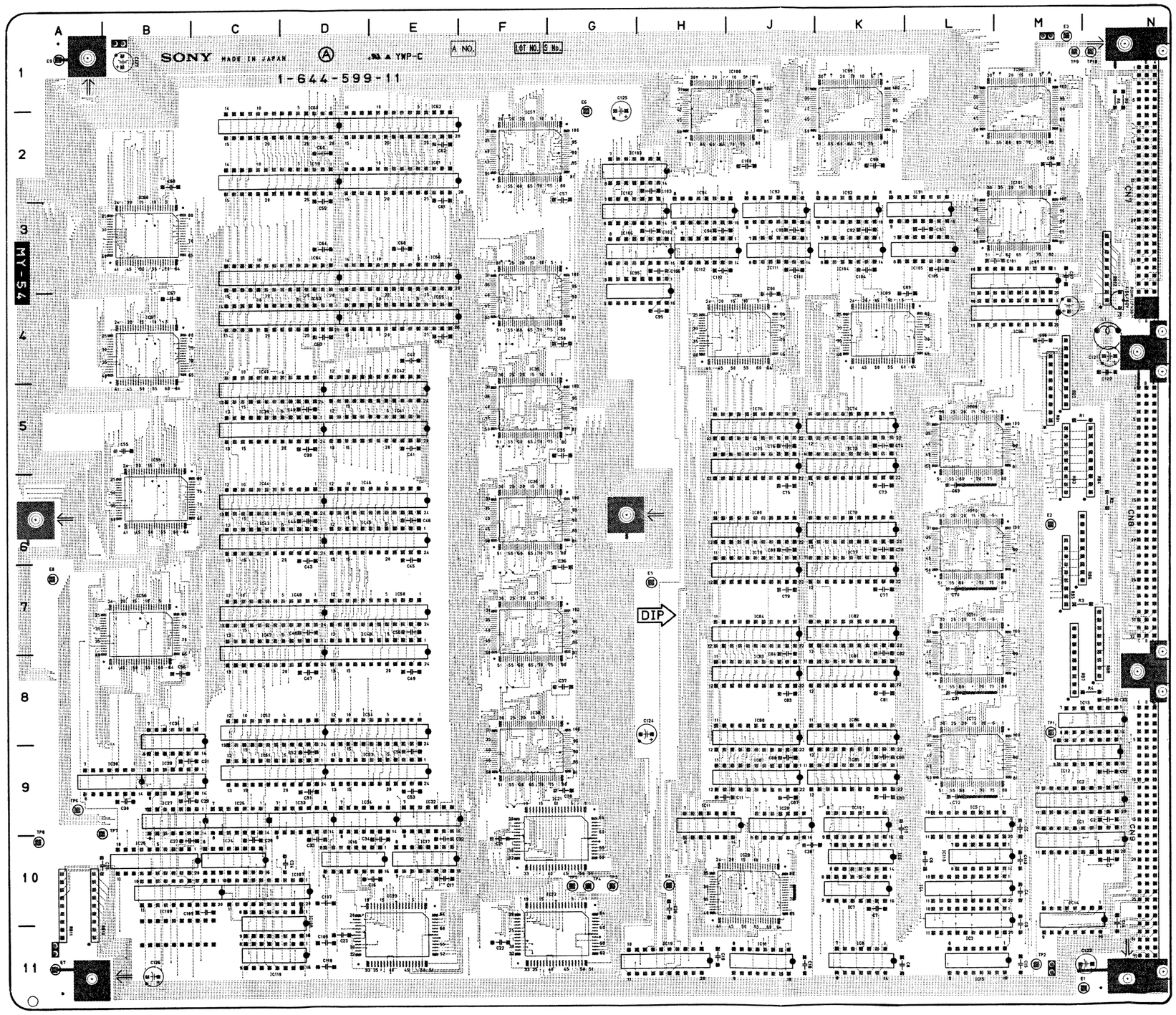

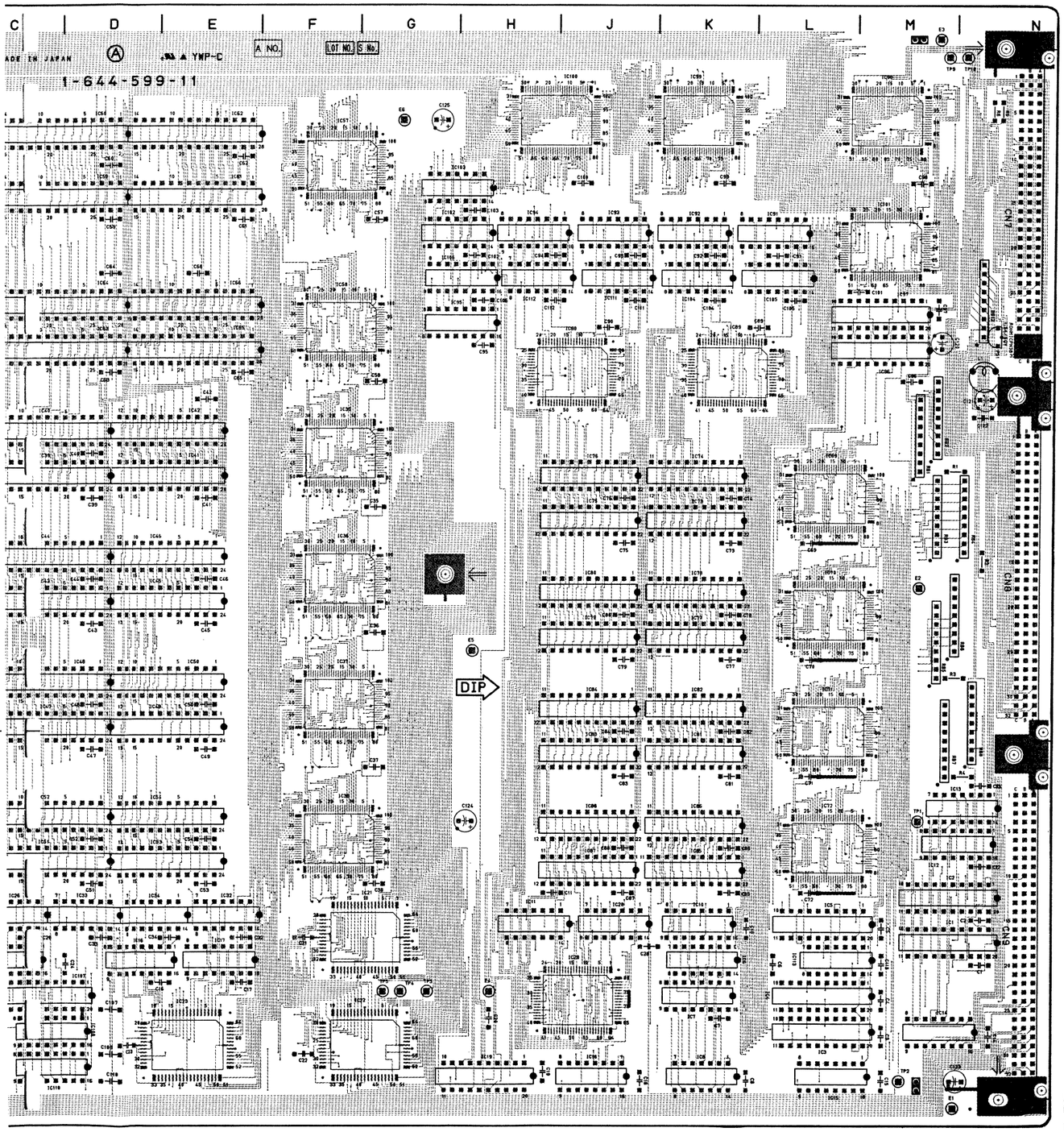

MY-54 -A SIDE-
1-644-599-11
DFS-500/500P

MY-54;Field Memory

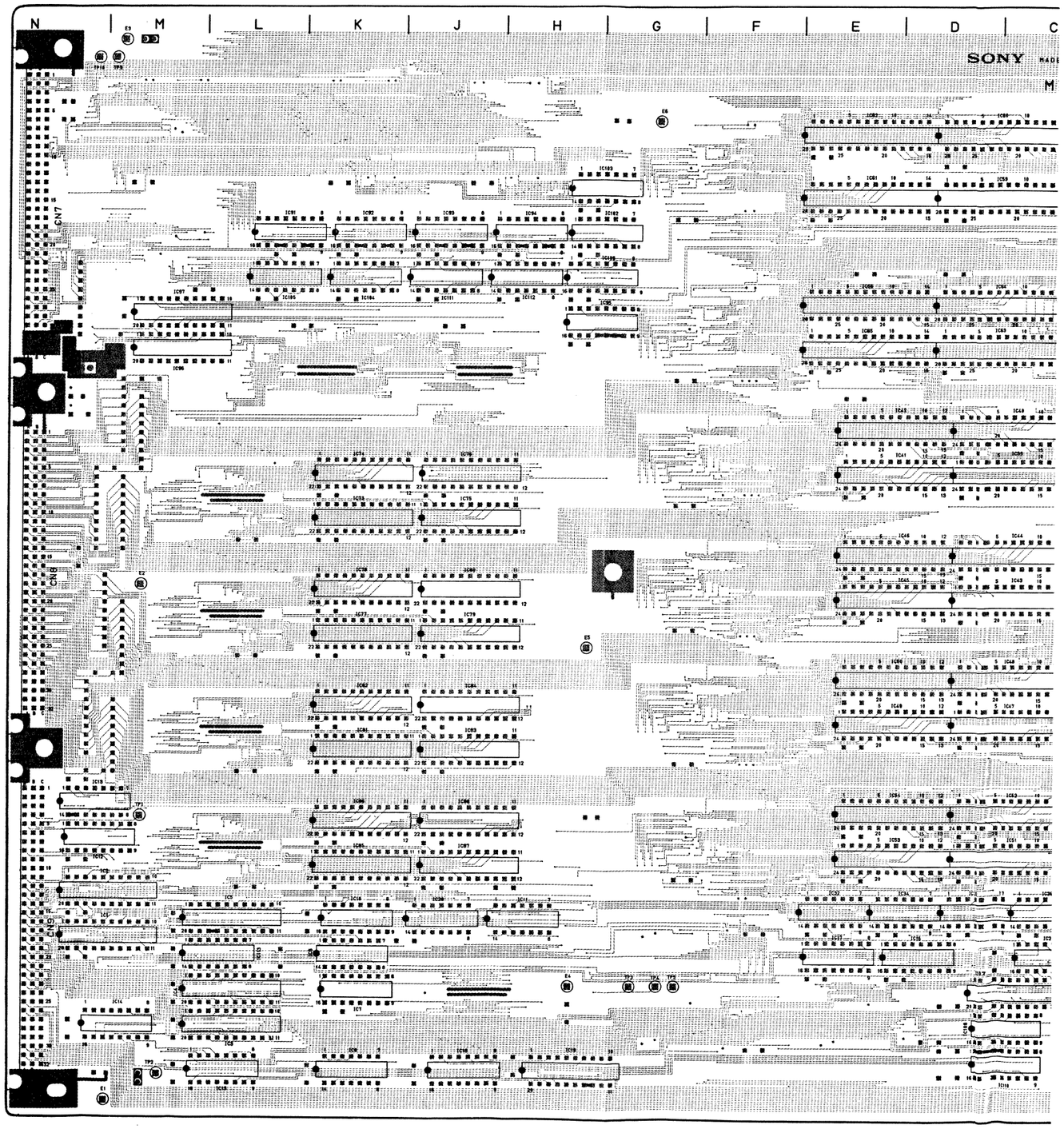

MY-54;Field Memory

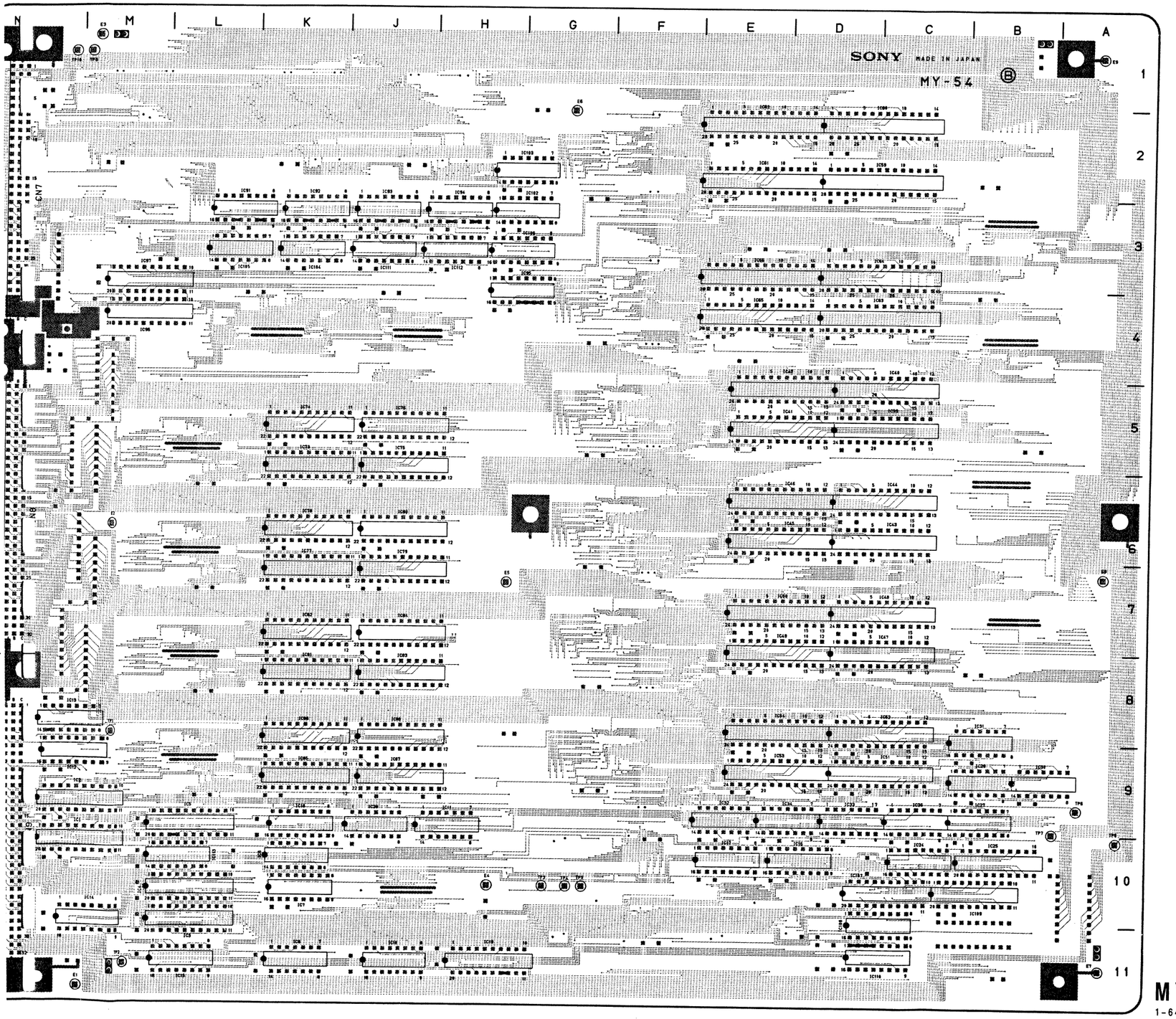

MY-54(1-644-599-11)

CN7	N-2	IC41	E-5	IC94	H-2
CN8	N-6	IC42	E-4	IC95	G-3
CN9	N-9	IC43	C-6	IC96	M-4
		IC44	C-6	IC97	M-3
E1	M-11	IC45	D-6	IC98	M-1
E2	M-6	IC46	D-6	IC99	K-1
E3	M-1	IC47	C-7	IC100	J-1
E4	H-10	IC48	D-7	IC101	M-2
E5	H-7	IC49	D-7	IC102	G-2
E6	G-1	IC50	E-7	IC103	H-2
E7	A-11	IC51	C-9	IC104	K-3
E8	A-7	IC52	C-8	IC105	L-3
E9	A-1	IC53	D-9	IC106	G-3
		IC54	D-8	IC107	D-10
IC1	M-9	IC55	B-5	IC108	D-11
IC2	M-9	IC56	B-7	IC109	B-10
IC3	L-11	IC57	F-2	IC110	C-11
IC4	L-10	IC58	F-3	IC111	J-3
IC5	L-9	IC59	D-2	IC112	H-3
IC6	K-10	IC60	D-1	IC113	L-10
IC7	K-10	IC61	E-2		
IC8	K-11	IC62	E-1	PS1	N-4
IC10	K-9	IC63	D-4		
IC11	H-9	IC64	D-3	RB1	M-5
IC12	M-9	IC65	E-4	RB2	M-5
IC13	N-8	IC66	E-3	RB3	M-6
IC14	M-10	IC67	B-4	RB4	N-6
IC15	L-11	IC68	B-2	RB5	M-7
IC16	D-10	IC69	L-5	RB6	N-7
IC17	E-10	IC70	L-6	RB7	M-8
IC18	J-11	IC71	L-7	RB8	N-8
IC19	H-11	IC72	L-8	RB10	A-11
IC20	J-10	IC73	K-5	RB11	A-11
IC21	G-9	IC74	K-5	RB12	N-3
IC22	G-10	IC75	J-5		
IC23	E-10	IC76	J-5	TP1	M-8
IC24	C-10	IC77	K-6	TP2	M-11
IC25	B-10	IC78	K-6	TP3	G-10
IC26	C-9	IC79	J-6	TP4	G-10
IC27	B-9	IC80	J-6	TP5	G-10
IC28	J-9	IC81	K-8	TP6	A-9
IC29	B-9	IC82	K-7	TP7	B-9
IC30	B-9	IC83	J-8	TP8	B-9
IC31	B-8	IC84	J-7	TP9	M-1
IC32	E-9	IC85	K-9	TP10	N-1
IC33	D-9	IC86	K-8		
IC34	D-9	IC87	J-9		
IC35	F-4	IC88	J-8		
IC36	F-6	IC89	K-3		
IC37	F-7	IC90	J-4		
IC38	F-8	IC91	L-2		
IC39	C-5	IC92	K-2		
IC40	C-4	IC93	J-2		

MY-54 -B SIDE-

1-644-599-11

DFS-500/500P

PU-78(1-644-598-11)

CN10	K-2	IC40	D-6	TP4	C-9
CN11	K-6	IC41	D-5	TP5	C-10
CN12	K-9	IC42	C-6	TP6	C-10
		IC43	C-5	TP7	D-9
E1	H-3	IC44	D-4	TP8	D-9
E2	J-10	IC45	D-5	TP9	D-9
E3	G-6	IC46	C-4	TP10	D-9
E4	F-10	IC47	C-5	TP11	D-9
E5	E-1	IC48	E-4	TP12	D-9
E6	E-6	IC49	E-6	TP13	D-9
E7	C-3	IC50	E-5	TP14	C-9
E8	C-6	IC51	E-5	TP15	C-9
E9	C-9	IC52	E-2		
		IC53	E-4		
IC1	J-8	IC54	E-3		
IC2	J-9	IC55	D-1		
IC3	J-8	IC56	B-1		
IC4	J-10	IC57	F-6		
IC5	J-10	IC58	F-2		
IC6	H-8	IC59	F-5		
IC7	F-8	IC60	F-3		
IC8	G-8	IC61	H-3		
IC9	H-9	IC62	H-4		
IC10	H-10	IC63	H-5		
IC11	G-9	IC64	H-6		
IC12	G-10	IC65	H-3		
IC13	G-10	IC66	H-5		
IC14	H-10	IC67	H-7		
IC15	G-8	IC68	J-3		
IC16	F-8	IC69	H-2		
IC17	B-9	IC70	J-4		
IC18	D-9	IC71	H-4		
IC19	F-9	IC72	J-6		
IC20	F-8	IC73	H-6		
IC21	E-10	IC74	J-7		
IC22	E-10	IC75	H-7		
IC23	F-10	IC101	F-10		
IC24	F-10	IC102	F-10		
IC25	D-8	IC103	F-9		
IC26	B-8	IC104	H-1		
IC27	D-8				
IC28	C-8	PS1	K-4		
IC29	B-4				
IC30	C-4	RB1	D-2		
IC31	D-4	RB2	B-2		
IC32	B-3	RB3	C-2		
IC33	D-3				
IC34	B-3	S1	E-1		
IC35	D-3	S2	C-1		
IC36	D-7				
IC37	D-6	TP1	G-8		
IC38	C-7	TP2	F-8		
IC39	C-6	TP3	C-10		

PU-78;Address Operation

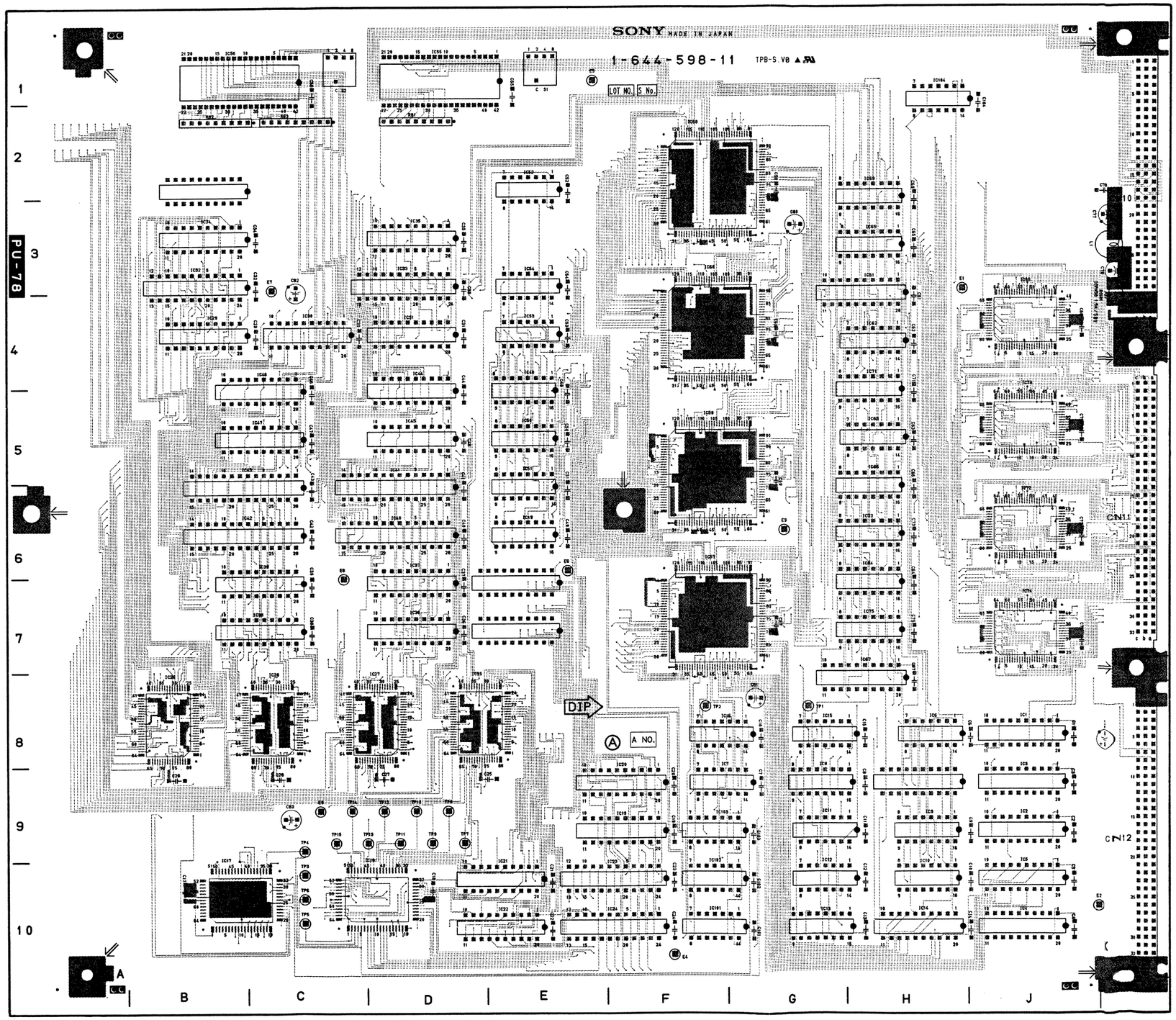

ation

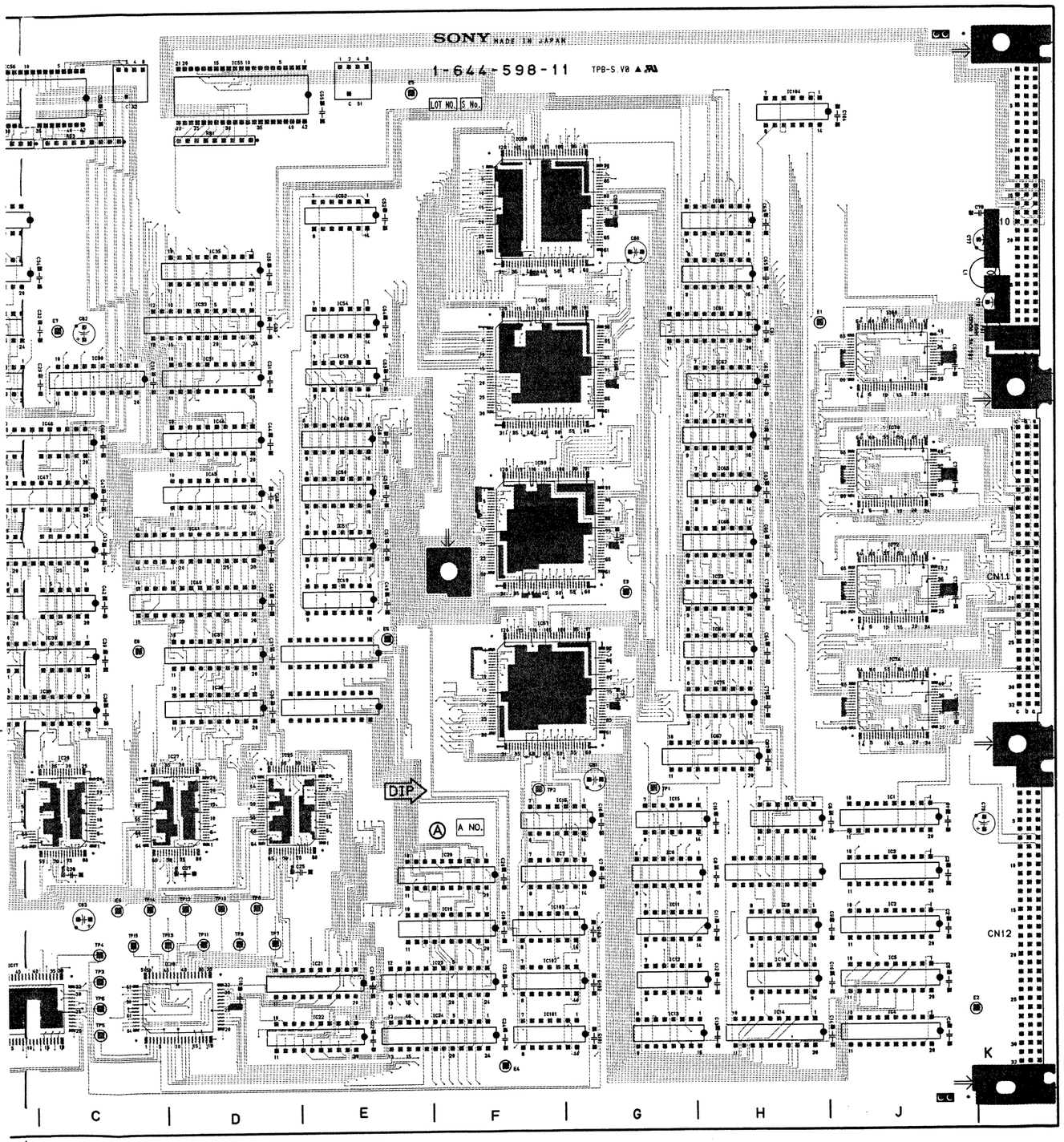

PU-78 -A SIDE-
1-644-598-11
DFS-500/500P

PU-78;Address Operation

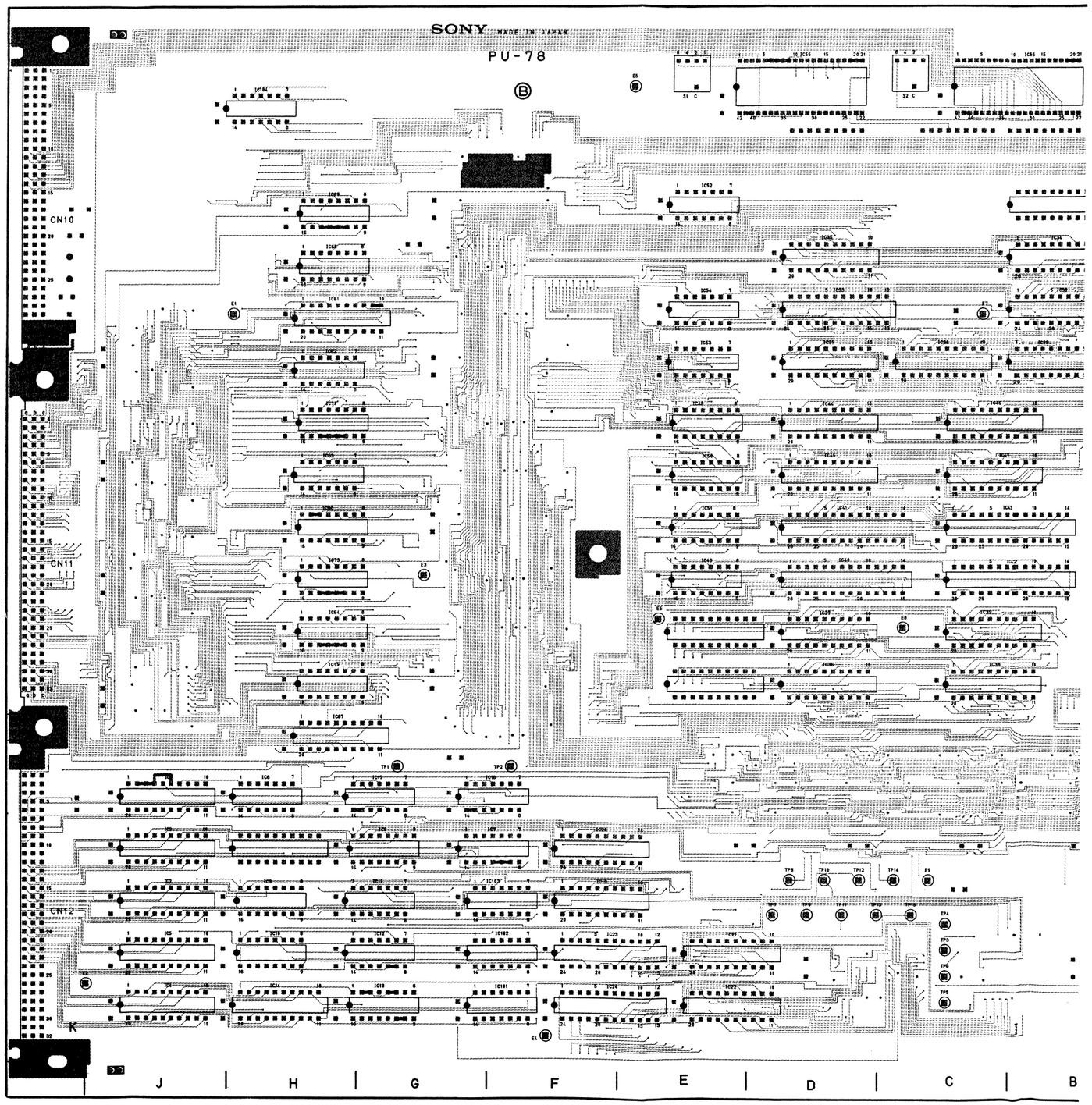

PU-78;Address Operation

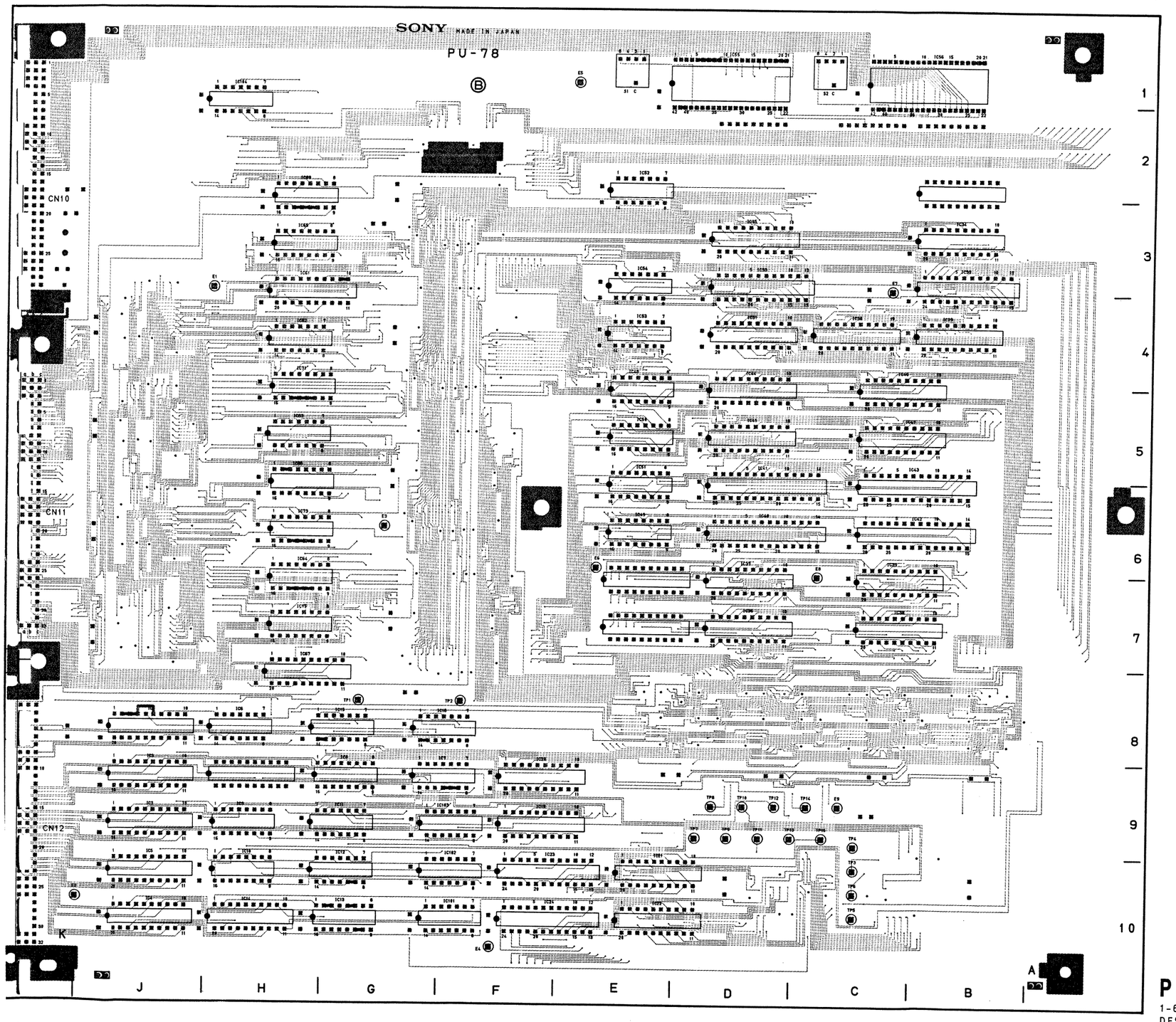

PU-78 -B SIDE-
1-644-598-11
DFS-500/500P

PU-78(1-644-598-11)

CN10	K-2	IC40	D-6	TP4	C-9
CN11	K-6	IC41	D-5	TP5	C-10
CN12	K-9	IC42	C-6	TP6	C-10
		IC43	C-5	TP7	D-9
E1	H-3	IC44	D-4	TP8	D-9
E2	J-10	IC45	D-5	TP9	D-9
E3	G-6	IC46	C-4	TP10	D-9
E4	F-10	IC47	C-5	TP11	D-9
E5	E-1	IC48	E-4	TP12	D-9
E6	E-6	IC49	E-6	TP13	D-9
E7	C-3	IC50	E-5	TP14	C-9
E8	C-6	IC51	E-5	TP15	C-9
E9	C-9	IC52	E-2		
		IC53	E-4		
IC1	J-8	IC54	E-3		
IC2	J-9	IC55	D-1		
IC3	J-8	IC56	B-1		
IC4	J-10	IC57	F-6		
IC5	J-10	IC58	F-2		
IC6	H-8	IC59	F-5		
IC7	F-8	IC60	F-3		
IC8	G-8	IC61	H-3		
IC9	H-9	IC62	H-4		
IC10	H-10	IC63	H-5		
IC11	G-9	IC64	H-6		
IC12	G-10	IC65	H-3		
IC13	G-10	IC66	H-5		
IC14	H-10	IC67	H-7		
IC15	G-8	IC68	J-3		
IC16	F-8	IC69	H-2		
IC17	B-9	IC70	J-4		
IC18	D-9	IC71	H-4		
IC19	F-9	IC72	J-6		
IC20	F-8	IC73	H-6		
IC21	E-10	IC74	J-7		
IC22	E-10	IC75	H-7		
IC23	F-10	IC101	F-10		
IC24	F-10	IC102	F-10		
IC25	D-8	IC103	F-9		
IC26	B-8	IC104	H-1		
IC27	D-8				
IC28	C-8	PS1	K-4		
IC29	B-4				
IC30	C-4	RB1	D-2		
IC31	D-4	RB2	B-2		
IC32	B-3	RB3	C-2		
IC33	D-3				
IC34	B-3	S1	E-1		
IC35	D-3	S2	C-1		
IC36	D-7				
IC37	D-6	TP1	G-8		
IC38	C-7	TP2	F-8		
IC39	C-6	TP3	C-10		

DA-63(1-644-601-11)

CN1	B-1	IC101	G-3	◎JR10	*C-11	Q416	*D-12	Q567	*J-12	RV526	H-9				
CN2	F-1	IC102	F-3	JR11	*C-11	Q417	*D-12	Q568	*J-13						
CN3	K-1	IC103	D-2	◎JR12	*C-11	Q418	*D-13	Q572	*H-10	S1	A-7				
CN40	H-1	IC104	D-3	JR13	*C-9	Q419	*D-13	Q573	*H-11	S2	C-14				
CN50	D-1	IC105	D-5	◎JR14	*C-9	Q420	*E-12	Q574	*G-9	S3	D-14				
		IC108	E-4	JR15	*C-9	Q421	*E-12	Q577	*H-9	S101	H-14				
DL501	L-9	IC109	F-4	◎JR16	*C-9	Q422	*E-12	Q578	*J-9	S102	G-14				
DL503	H-10	IC110	F-4	JR17	*A-12	Q423	*F-12			S103	F-14				
DL504	J-10	IC111	J-4	◎JR18	*A-12	Q424	*E-13	RB101	A-1						
		IC112	E-4	◎JR20	*A-12	Q425	*E-13	RB102	A-1	TH1	C-8				
D1	*C-9	IC114	B-2	JR21	*A-11	Q426	*E-13	RB103	A-1						
D2	*B-11	IC115	B-4	◎JR22	*A-11	Q427	*E-9	RB104	G-1	TP1	B-6				
D3	*B-12	IC116	B-5	JR401	*D-10	Q428	*F-12	RB105	G-1	TP2	A-9				
D4	B-14	IC117	F-6	◎JR402	*D-10	Q501	*L-8	RB106	F-1	TP3	A-10				
		IC118	J-3	JR403	*E-11	Q502	*L-7	RB107	F-1	TP4	C-11				
E1	C-8	IC119	J-3			Q503	*K-8	RB108	G-2	TP5	A-12				
E2	A-8	IC201	K-3	PS1	A-8	Q506	*L-8	RB109	G-2	TP6	B-9				
E3	A-12	IC202	L-3	PS2	A-7	Q507	*K-8	RB110	F-2	TP7	A-11				
E4	D-12	IC203	H-4	PS3	C-1	Q508	*K-9	RB111	F-2	TP8	B-11				
E101	H-2	IC204	H-4			Q512	*L-9	RB112	D-1	TP9	C-7				
E102	B-4	IC205	H-5	Q1	*A-6	Q514	*L-10	RB113	D-1	TP10	B-11				
E103	E-3	IC206	J-4	Q2	*A-6	Q515	*L-10	RB114	C-1	TP11	D-12				
E201	G-5	IC207	J-5	Q3	*A-9	Q516	*L-10	RB115	C-1	TP201	G-5				
E202	L-4	IC208	K-4	Q4	*A-10	Q517	*L-11	RB202	H-4	TP202	G-5				
E301	D-7	IC401	D-11	Q5	*B-8	Q518	*L-10	RB203	J-4	TP203	L-4				
E302	D-9	IC402	E-12	Q6	*C-8	Q519	*K-11	RB204	J-5	TP204	L-5				
E401	F-11	IC501	K-7	Q7	*C-7	Q520	*K-11	RB205	K-4	TP205	L-5				
E402	D-13	IC502	K-7	Q8	*C-7	Q521	*K-11			TP206	L-4				
E403	F-11	IC503	L-7	Q9	*A-11	Q522	*G-6	RV1	B-8	TP301	F-10				
E501	K-9	IC504	L-7	Q10	*B-13	Q523	*H-6	RV2	D-14	TP302	E-11				
E502	H-12	IC505	K-8	Q11	*B-12	Q524	*J-6	RV3	E-14	TP303	F-8				
E503	L-10	IC506	K-9	Q201	*K-4	Q525	*H-9	RV4	C-12	TP304	F-12				
		IC507	L-10	Q202	*K-4	Q526	*J-7	RV5	C-12	TP305	F-8				
FL1	B-8	IC508	L-11	Q203	*K-4	Q527	*H-7	RV6	B-11	TP306	F-7				
FL301	E-7	IC509	K-13	Q204	*L-4	Q528	*H-7	RV7	B-11	TP401	D-9				
FL302	E-8	IC510	K-13	Q301	*D-9	Q529	*G-7	RV8	B-12	TP403	E-12				
FL401	E-12	IC511	L-13	Q302	*E-9	Q530	*G-7	RV9	B-12	TP404	F-13				
FL501	L-8	IC512	J-7	Q303	*E-9	Q531	*H-7	RV10	D-9	TP501	J-8				
FL502	K-9	IC513	J-8	Q304	*F-9	Q532	*J-7	RV11	F-14	TP502	K-9				
FL503	J-7	IC514	G-9	Q305	*D-8	Q533	*J-8	RV301	E-8	TP503	L-9				
FL504	H-7	IC516	G-12	Q306	*E-8	Q534	*H-7	◎RV401	E-9	TP504	L-12				
FL505	G-9	IC517	G-13	Q307	*E-8	Q535	*H-8	RV402	E-10	TP505	K-13				
		IC518	H-13	Q308	*E-7	Q536	*G-8	◎RV403	E-10	TP506	L-13				
IC1	B-8	IC519	H-13	Q309	*D-7	Q537	*G-8	RV404	E-14	TP507	L-13				
IC2	B-7	IC520	H-11	Q311	*E-7	Q538	*G-8	RV406	F-12	TP508	J-7				
IC3	C-8	IC521	H-12	Q312	*F-7	Q540	*K-10	RV504	L-10	TP509	G-7				
IC4	B-8	IC522	H-13	Q313	*D-8	Q541	*K-10	RV506	L-11	TP510	J-8				
IC5	A-9	IC523	J-11	Q315	*E-8	Q542	*K-10	RV507	K-14	TP511	G-8				
IC6	A-9	IC524	J-13	Q316	*F-8	Q545	*G-11	RV508	K-14	TP512	J-9				
IC7	B-9	IC525	K-11	◎Q401	*E-10	Q546	*G-12	RV509	K-14	TP514	G-13				
IC8	C-10	IC526	J-9	Q402	*E-9	Q548	*G-12	RV511	H-7	TP515	G-12				
IC9	C-9	IC601	K-2	Q403	*D-10	Q549	*G-13	RV512	H-8	TP516	H-13				
IC10	A-11	IC602	J-2	◎Q404	*E-10	Q551	*G-11	◎RV513	H-7	TP517	H-12				
IC11	C-13	IC603	H-1	◎Q405	*D-11	Q553	*H-12	RV514	H-8	TP518	J-13				
IC12	B-13			Q406	*D-11	Q554	*H-13	RV515	G-11	TP519	J-12				
IC13	C-12	JR1	*A-11	◎Q407	*E-11	Q556	*J-10	RV516	H-14	TP520	J-13				
IC14	A-12	◎JR2	*A-10	Q408	*D-11	Q557	*H-11	RV518	H-11						
IC15	A-12	JR3	*J-10	Q409	*E-11	Q558	*J-11	RV520	J-14	VCO1	B-10				
IC16	A-13	◎JR4	*J-10	Q410	*F-12	Q560	*H-12	RV521	H-11	VCO2	A-10				
IC17	B-11	JR5	*J-10	Q411	*F-12	Q561	*H-13	RV522	J-14						
IC18	C-11	◎JR6	*J-10	Q413	*E-12	Q563	*J-10	RV523	J-11	*:SOLDERING SIDE					
IC19	A-13	JR7	*C-11	Q414	*E-12	Q564	*J-11	RV524	J-14						
IC20	C-8	JR9	*C-11	Q415	*D-12	Q565	*J-11	RV525	H-10	◎:EK ONLY					

DA-63;D/A Converter

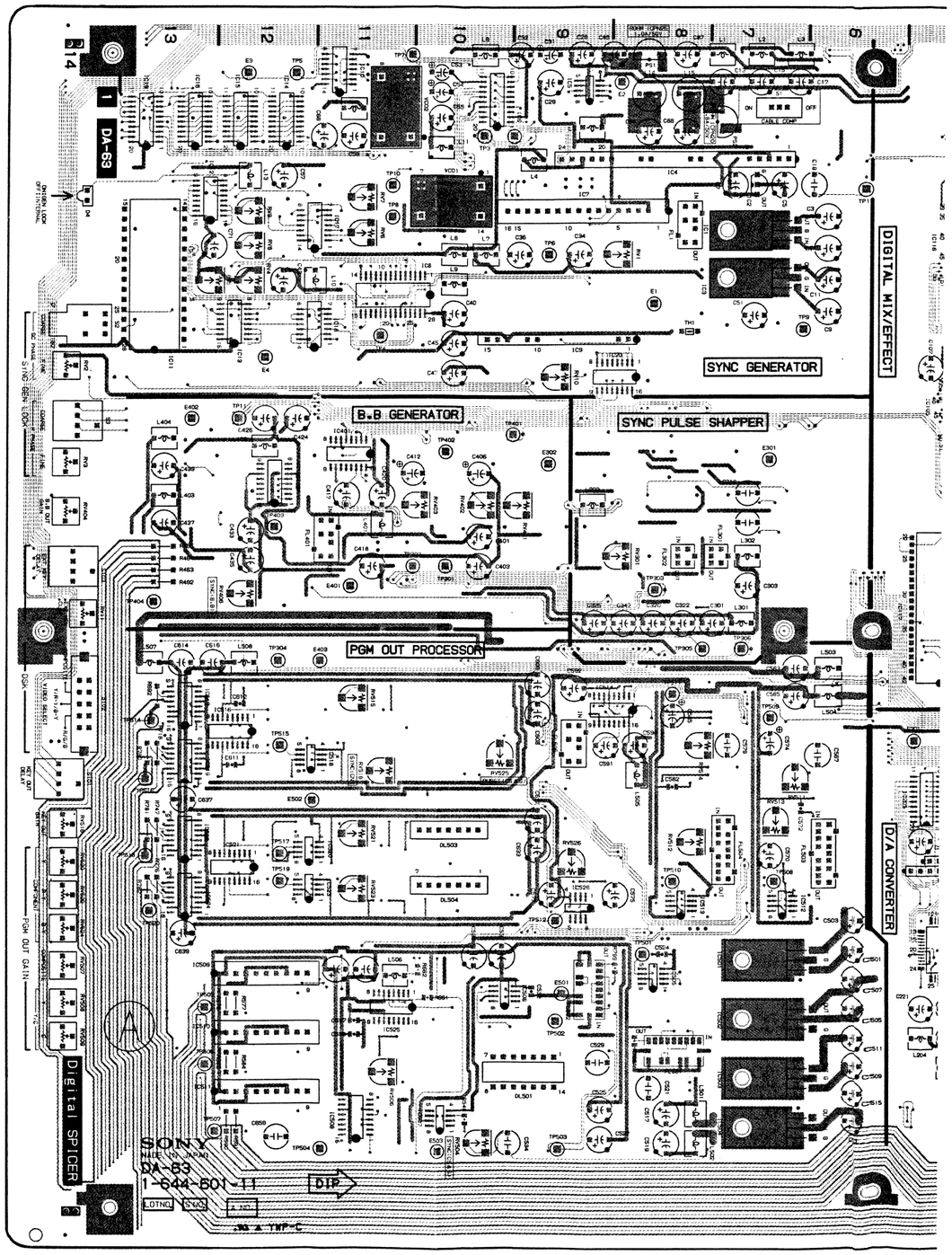

DA-63;D/A Converter

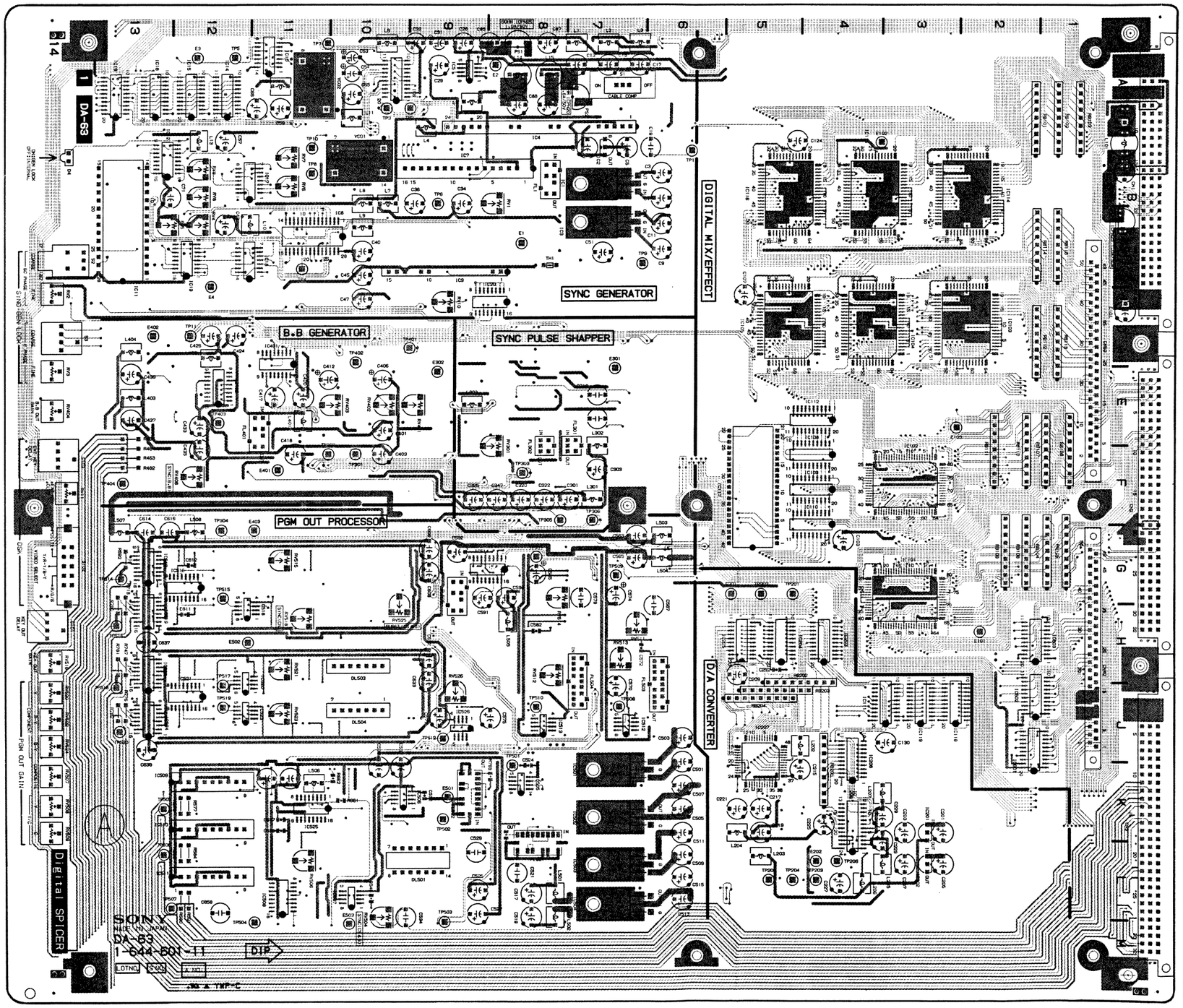

J-12	RV526	H-9
J-13		
H-[illegible]	S1	A-7
H-[illegible]	S2	C-14
G-9	S3	D-14
H-9	S101	H-14
J-[illegible]	S102	G-14
	S103	F-14
A-1		
A-1	TH1	C-8
A-[illegible]		
G-[illegible]	TP1	B-6
G-1	TP2	A-9
F-1	TP3	A-10
F-[illegible]	TP4	C-11
G-[illegible]	TP5	A-12
G-2	TP6	B-9
F-2	TP7	A-11
F-[illegible]	TP8	B-11
D-[illegible]	TP9	C-7
D-[illegible]	TP10	B-11
C-1	TP11	D-12
C-[illegible]	TP201	G-5
H-[illegible]	TP202	G-5
J-[illegible]	TP203	L-4
J-5	TP204	L-5
K-[illegible]	TP205	L-5
	TP206	L-4
B-[illegible]	TP301	F-10
D-14	TP302	E-11
E-14	TP303	F-8
C-[illegible]	TP304	F-12
C-[illegible]	TP305	F-8
B-11	TP306	F-7
B-11	TP401	D-9
B-[illegible]	TP403	E-12
B-[illegible]	TP404	F-13
D-9	TP501	J-8
F-14	TP502	K-9
E-[illegible]	TP503	L-9
E-[illegible]	TP504	L-12
E-[illegible]	TP505	K-13
E-10	TP506	L-13
E-[illegible]	TP507	L-13
F-[illegible]	TP508	J-7
L-[illegible]	TP509	G-7
L-11	TP510	J-8
K-[illegible]	TP511	G-8
K-[illegible]	TP512	J-9
K-[illegible]	TP514	G-13
H-7	TP515	G-12
H-[illegible]	TP516	H-13
H-[illegible]	TP517	H-12
H-[illegible]	TP518	J-13
G-11	TP519	J-12
H-14	TP520	J-13
H-[illegible]		
J-[illegible]	VCO1	B-10
H-11	VCO2	A-10
J-14		
J-[illegible]	*:SOLDERING SIDE	
J-[illegible]		
H-10	◎:EK ONLY	

DA-63 -A SIDE-
1-644-601-11
DFS-500/500P

DA-63;D/A Converter

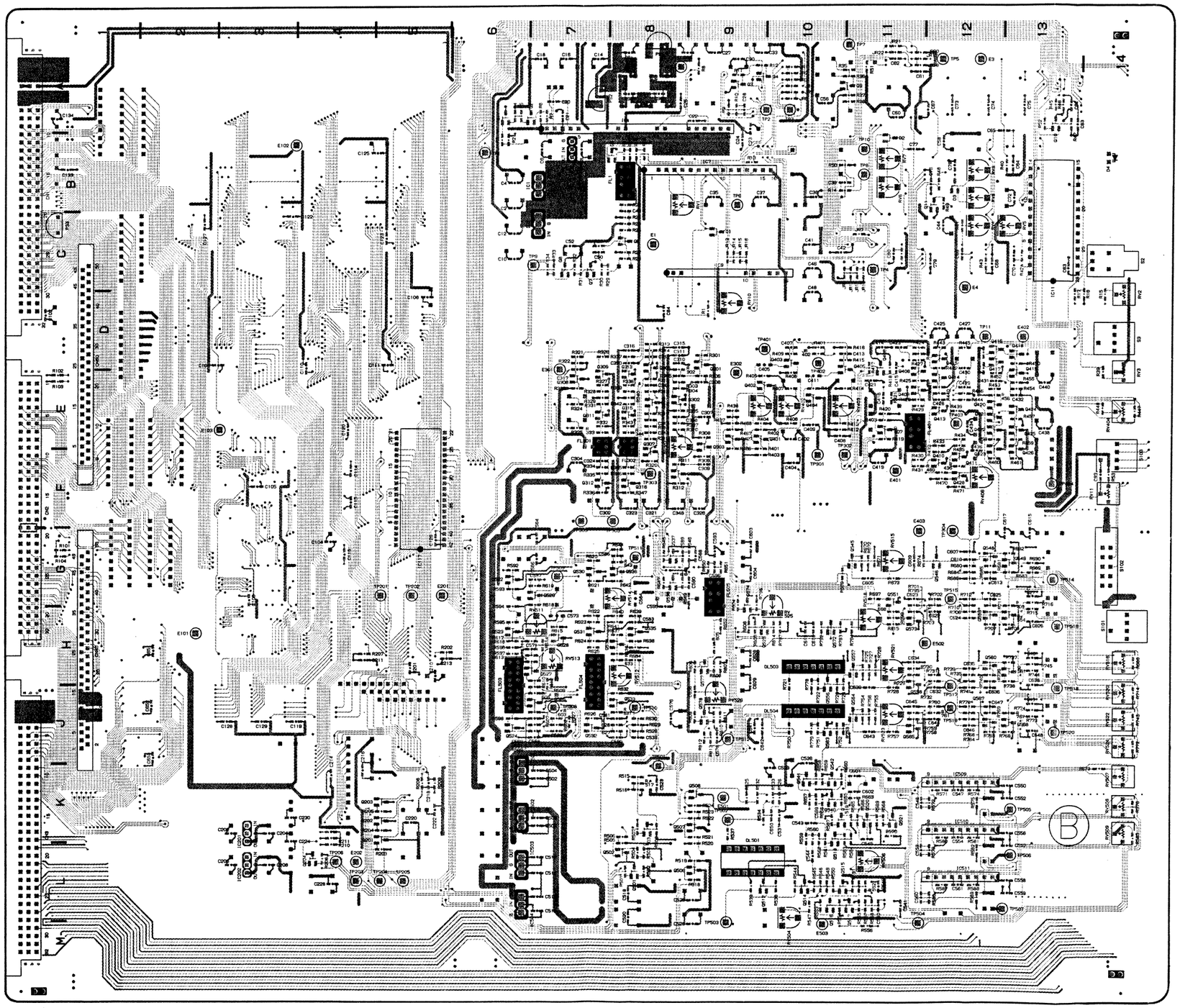

DA-63 -B SIDE-

1-644-601-11

DFS-500/500P

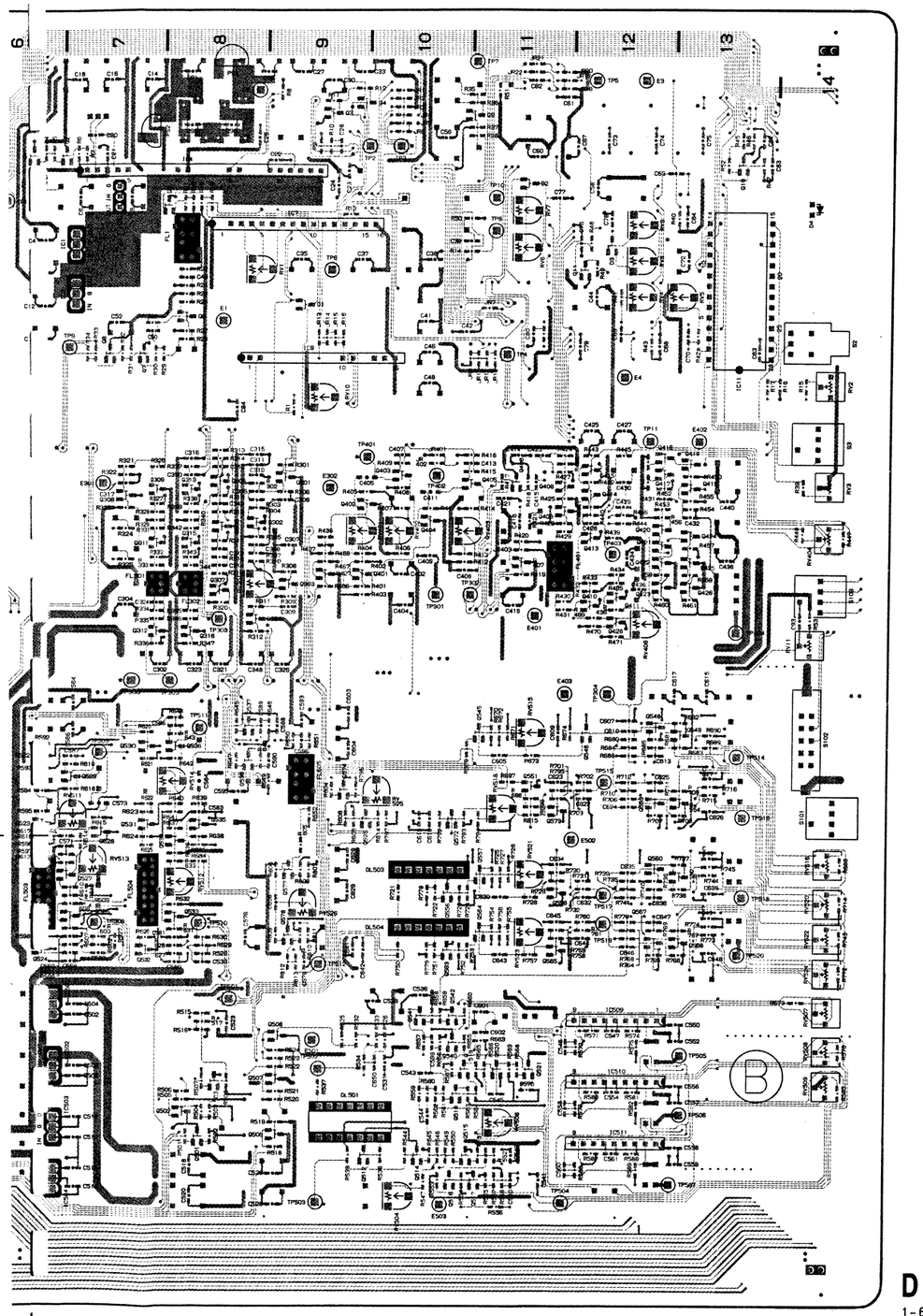

DA-63 -B SIDE-

1-644-601-11
DFS-500/500P

DA-63(1-644-601-11)

CN1	B-1	IC101	G-3	◎JR10	*C-11	Q416	*D-12	Q567	*J-12	RV526	H-9
CN2	F-1	IC102	F-3	JR11	*C-11	Q417	*D-12	Q568	*J-13		
CN3	K-1	IC103	D-2	◎JR12	*C-11	Q418	*D-13	Q572	*H-10	S1	A-7
CN40	H-1	IC104	D-3	JR13	*C-9	Q419	*D-13	Q573	*H-11	S2	C-14
CN50	D-1	IC105	D-5	◎JR14	*C-9	Q420	*E-12	Q574	*G-9	S3	D-14
		IC108	E-4	JR15	*C-9	Q421	*E-12	Q577	*H-9	S101	H-14
DL501	L-9	IC109	F-4	◎JR16	*C-9	Q422	*E-12	Q578	*J-9	S102	G-14
DL503	H-10	IC110	F-4	JR17	*A-12	Q423	*F-12			S103	F-14
DL504	J-10	IC111	J-4	◎JR18	*A-12	Q424	*E-13	RB101	A-1		
		IC112	E-4	◎JR20	*A-12	Q425	*E-13	RB102	A-1	TH1	C-8
D1	*C-9	IC114	B-2	JR21	*A-11	Q426	*E-13	RB103	A-1		
D2	*B-11	IC115	B-4	◎JR22	*A-11	Q427	*E-9	RB104	G-1	TP1	B-6
D3	*B-12	IC116	B-5	JR401	*D-10	Q428	*F-12	RB105	G-1	TP2	A-9
D4	B-14	IC117	F-6	◎JR402	*D-10	Q501	*L-8	RB106	F-1	TP3	A-10
		IC118	J-3	JR403	*E-11	Q502	*L-7	RB107	F-1	TP4	C-11
E1	C-8	IC119	J-3			Q503	*K-8	RB108	G-2	TP5	A-12
E2	A-8	IC201	K-3	PS1	A-8	Q506	*L-8	RB109	G-2	TP6	B-9
E3	A-12	IC202	L-3	PS2	A-7	Q507	*K-8	RB110	F-2	TP7	A-11
E4	D-12	IC203	H-4	PS3	C-1	Q508	*K-9	RB111	F-2	TP8	B-11
E101	H-2	IC204	H-4			Q512	*L-9	RB112	D-1	TP9	C-7
E102	B-4	IC205	H-5	Q1	*A-6	Q514	*L-10	RB113	D-1	TP10	B-11
E103	E-3	IC206	J-4	Q2	*A-6	Q515	*L-10	RB114	C-1	TP11	D-12
E201	G-5	IC207	J-5	Q3	*A-9	Q516	*L-10	RB115	C-1	TP201	G-5
E202	L-4	IC208	K-4	Q4	*A-10	Q517	*L-11	RB202	H-4	TP202	G-5
E301	D-7	IC401	D-11	Q5	*B-8	Q518	*L-10	RB203	J-4	TP203	L-4
E302	D-9	IC402	E-12	Q6	*C-8	Q519	*K-11	RB204	J-5	TP204	L-5
E401	F-11	IC501	K-7	Q7	*C-7	Q520	*K-11	RB205	K-4	TP205	L-5
E402	D-13	IC502	K-7	Q8	*C-7	Q521	*K-11			TP206	L-4
E403	F-11	IC503	L-7	Q9	*A-11	Q522	*G-6	RV1	B-8	TP301	F-10
E501	K-9	IC504	L-7	Q10	*B-13	Q523	*H-6	RV2	D-14	TP302	E-11
E502	H-12	IC505	K-8	Q11	*B-12	Q524	*J-6	RV3	E-14	TP303	F-8
E503	L-10	IC506	K-9	Q201	*K-4	Q525	*H-9	RV4	C-12	TP304	F-12
		IC507	L-10	Q202	*K-4	Q526	*J-7	RV5	C-12	TP305	F-8
FL1	B-8	IC508	L-11	Q203	*K-4	Q527	*H-7	RV6	B-11	TP306	F-7
FL301	E-7	IC509	K-13	Q204	*L-4	Q528	*H-7	RV7	B-11	TP401	D-9
FL302	E-8	IC510	K-13	Q301	*D-9	Q529	*G-7	RV8	B-12	TP403	E-12
FL401	E-12	IC511	L-13	Q302	*E-9	Q530	*G-7	RV9	B-12	TP404	F-13
FL501	L-8	IC512	J-7	Q303	*E-9	Q531	*H-7	RV10	D-9	TP501	J-8
FL502	K-9	IC513	J-8	Q304	*F-9	Q532	*J-7	RV11	F-14	TP502	K-9
FL503	J-7	IC514	G-9	Q305	*D-8	Q533	*J-8	RV301	E-8	TP503	L-9
FL504	H-7	IC516	G-12	Q306	*E-8	Q534	*H-7	◎RV401	E-9	TP504	L-12
FL505	G-9	IC517	G-13	Q307	*E-8	Q535	*H-8	RV402	E-10	TP505	K-13
		IC518	H-13	Q308	*E-7	Q536	*G-8	◎RV403	E-10	TP506	L-13
IC1	B-8	IC519	H-13	Q309	*D-7	Q537	*G-8	RV404	E-14	TP507	L-13
IC2	B-7	IC520	H-11	Q311	*E-7	Q538	*G-8	RV406	F-12	TP508	J-7
IC3	C-8	IC521	H-12	Q312	*F-7	Q540	*K-10	RV504	L-10	TP509	G-7
IC4	B-8	IC522	H-13	Q313	*D-8	Q541	*K-10	RV506	L-11	TP510	J-8
IC5	A-9	IC523	J-11	Q315	*E-8	Q542	*K-10	RV507	K-14	TP511	G-8
IC6	A-9	IC524	J-13	Q316	*F-8	Q545	*G-11	RV508	K-14	TP512	J-9
IC7	B-9	IC525	K-11	◎Q401	*E-10	Q546	*G-12	RV509	K-14	TP514	G-13
IC8	C-10	IC526	J-9	Q402	*E-9	Q548	*G-12	RV511	H-7	TP515	G-12
IC9	C-9	IC601	K-2	Q403	*D-10	Q549	*G-13	RV512	H-8	TP516	H-13
IC10	A-11	IC602	J-2	◎Q404	*E-10	Q551	*G-11	◎RV513	H-7	TP517	H-12
IC11	C-13	IC603	H-1	◎Q405	*D-11	Q553	*H-12	RV514	H-8	TP518	J-13
IC12	B-13			Q406	*D-11	Q554	*H-13	RV515	G-11	TP519	J-12
IC13	C-12	JR1	*A-11	◎Q407	*E-11	Q556	*J-10	RV516	H-14	TP520	J-13
IC14	A-12	◎JR2	*A-10	Q408	*D-11	Q557	*H-11	RV518	H-11		
IC15	A-12	JR3	*J-10	Q409	*E-11	Q558	*J-11	RV520	J-14	VCO1	B-10
IC16	A-13	◎JR4	*J-10	Q410	*F-12	Q560	*H-12	RV521	H-11	VCO2	A-10
IC17	B-11	JR5	*J-10	Q411	*F-12	Q561	*H-13	RV522	J-14		
IC18	C-11	◎JR6	*J-10	Q413	*E-12	Q563	*J-10	RV523	J-11	*:SOLDERING SIDE	
IC19	A-13	JR7	*C-11	Q414	*E-12	Q564	*J-11	RV524	J-14		
IC20	C-8	JR9	*C-11	Q415	*D-12	Q565	*J-11	RV525	H-10	◎:EK ONLY	

SY-172;System Control

SY-172(1-644-597-11)

BT1	C-2	IC36	M-9
		IC37	M-8
CNI1	B-5	IC38	M-8
CNI2	D-5	IC39	M-7
CNI3	B-7	IC40	G-3
CNI4	D-7	IC41	F-4
CNI5	B-8	IC42	H-4
CNI6	D-8	IC43	F-2
CNI7	B-9	IC44	F-4
CNI8	D-9	IC45	H-4
		IC46	H-2
CN16	N-3	IC47	J-4
CN18	N-10	IC48	J-5
		IC49	F-1
D1	B-3	IC50	H-5
		IC51	K-4
E1	H-10	IC52	K-3
E2	H-3	IC53	K-2
E3	K-8	IC54	K-1
E4	L-1	IC55	K-6
E5	M-8	IC56	D-3
		IC57	M-2
IC1	B-5	IC58	M-3
IC2	D-5	IC59	B-4
IC3	B-7	IC60	D-4
IC4	D-7	IC61	B-3
IC5	B-8	IC62	D-3
IC6	D-8	IC63	C-3
IC7	B-9	IC64	K-10
IC8	D-9		
IC9	H-10	PS1	N-4
IC10	J-10		
IC11	H-9	Q1	B-3
IC12	F-9		
IC13	D-10	RB1	A-3
IC14	H-9	RB2	A-3
IC15	F-7	RB3	M-7
IC16	F-7	RB4	K-10
IC17	J-8		
IC18	F-8	S1	A-4
IC19	H-7	S2	A-3
IC20	H-8	S3	L-10
IC21	H-7		
IC22	J-7	TP1	H-10
IC23	B-10	TP2	H-3
IC24	D-10	TP3	J-8
IC25	M-6	TP4	L-1
IC26	J-6	TP5	M-7
IC27	K-6	X1	J-11
IC28	K-7	X2	J-3
IC29	J-9		
IC30	J-9		
IC31	M-11		
IC32	J-7		
IC33	K-7		
IC34	M-10		
IC35	M-9		

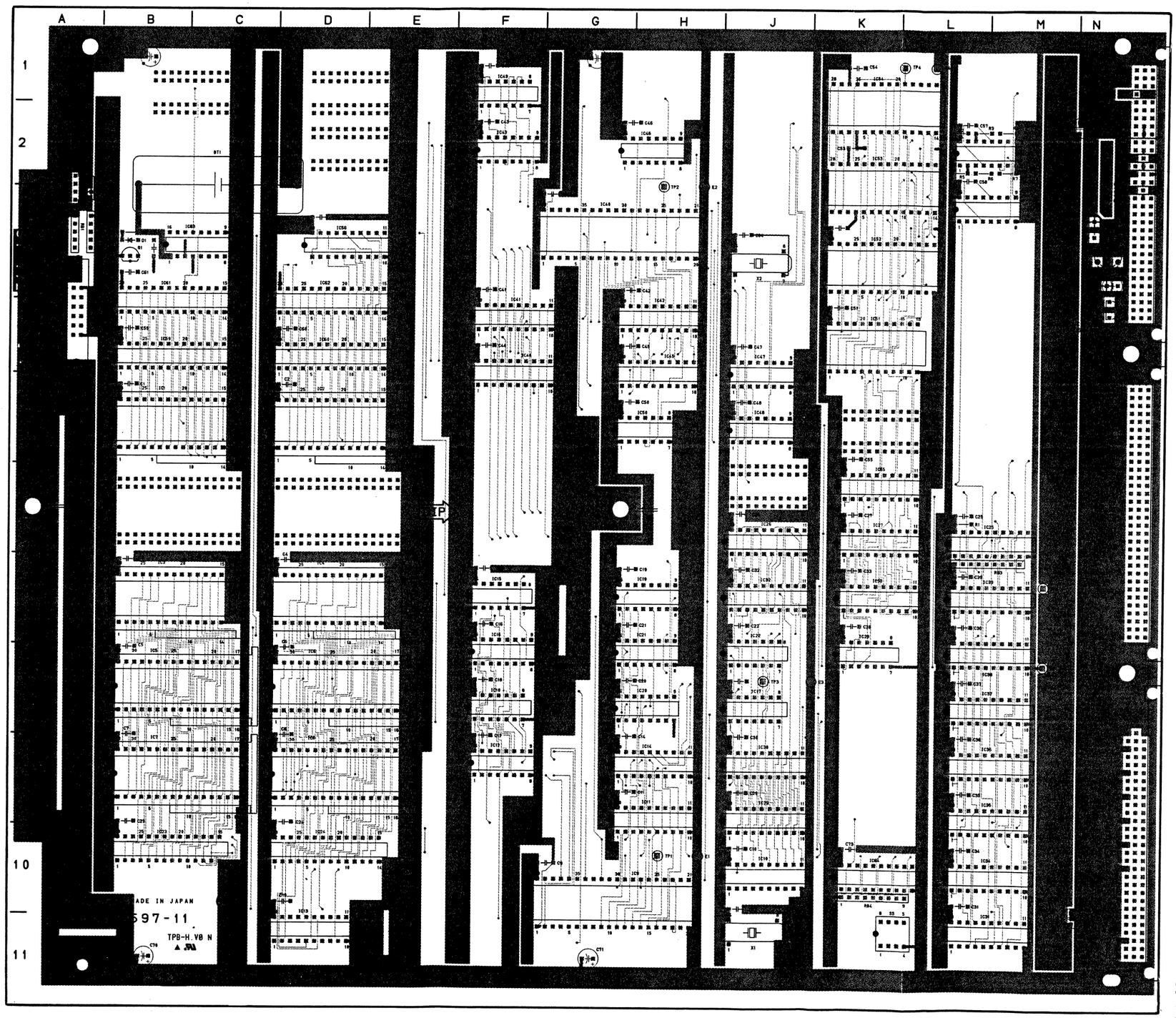

SY-172-A
1-644-597-11
DFS-500/500P

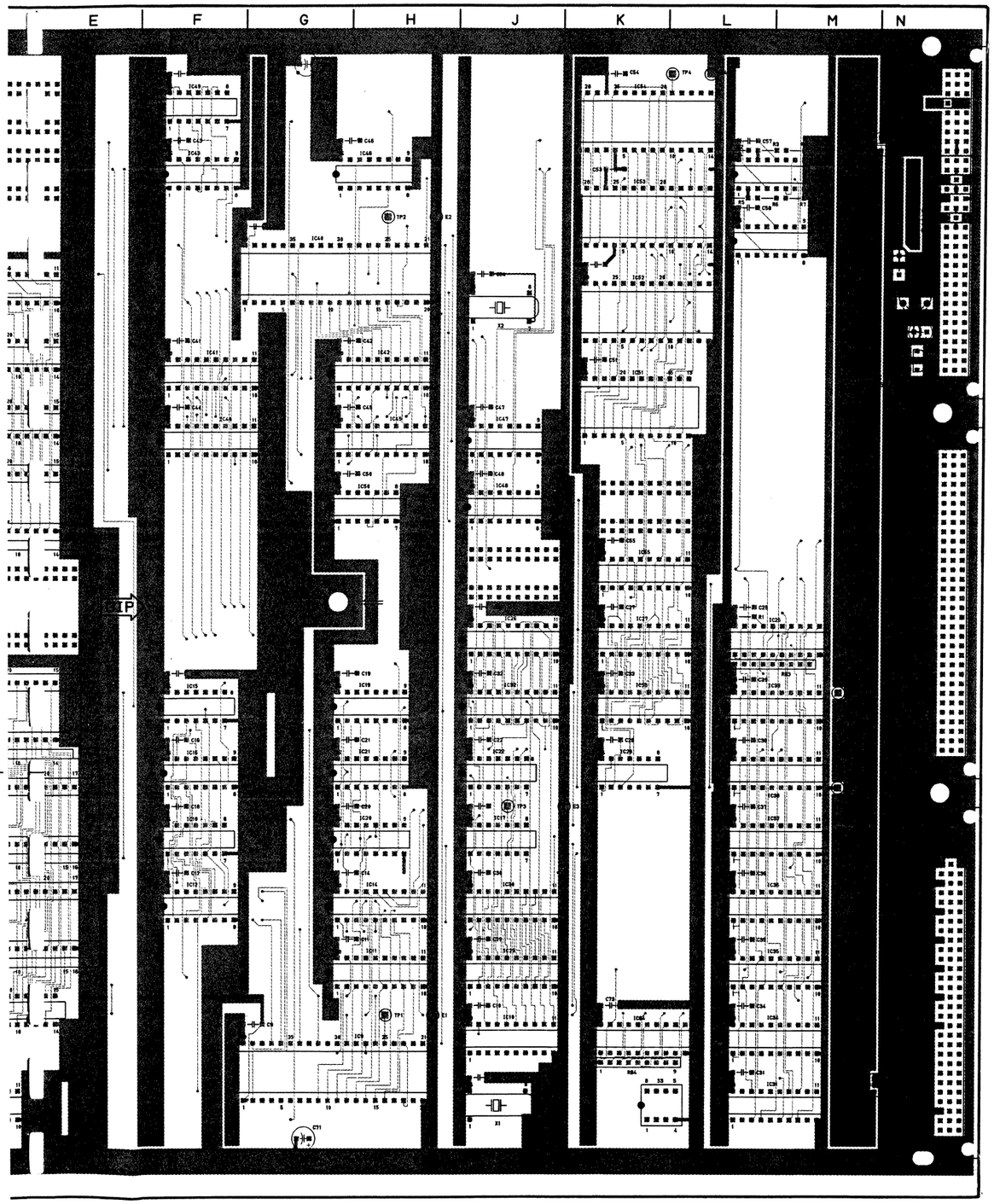

SY-172 -A SIDE-
1-644-597-11
DFS-500/500P

SY-172;System Control

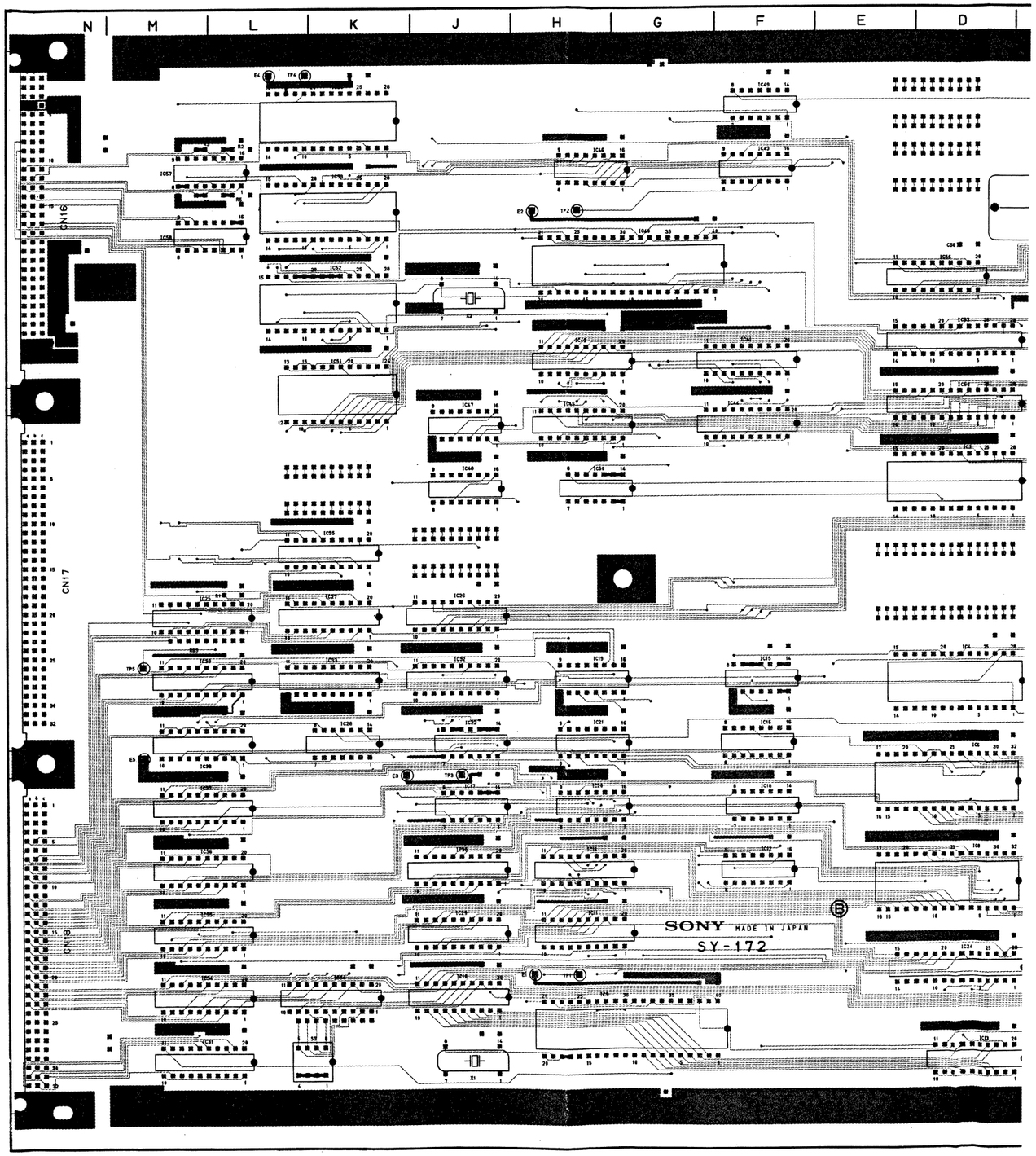

SY-172;System Control

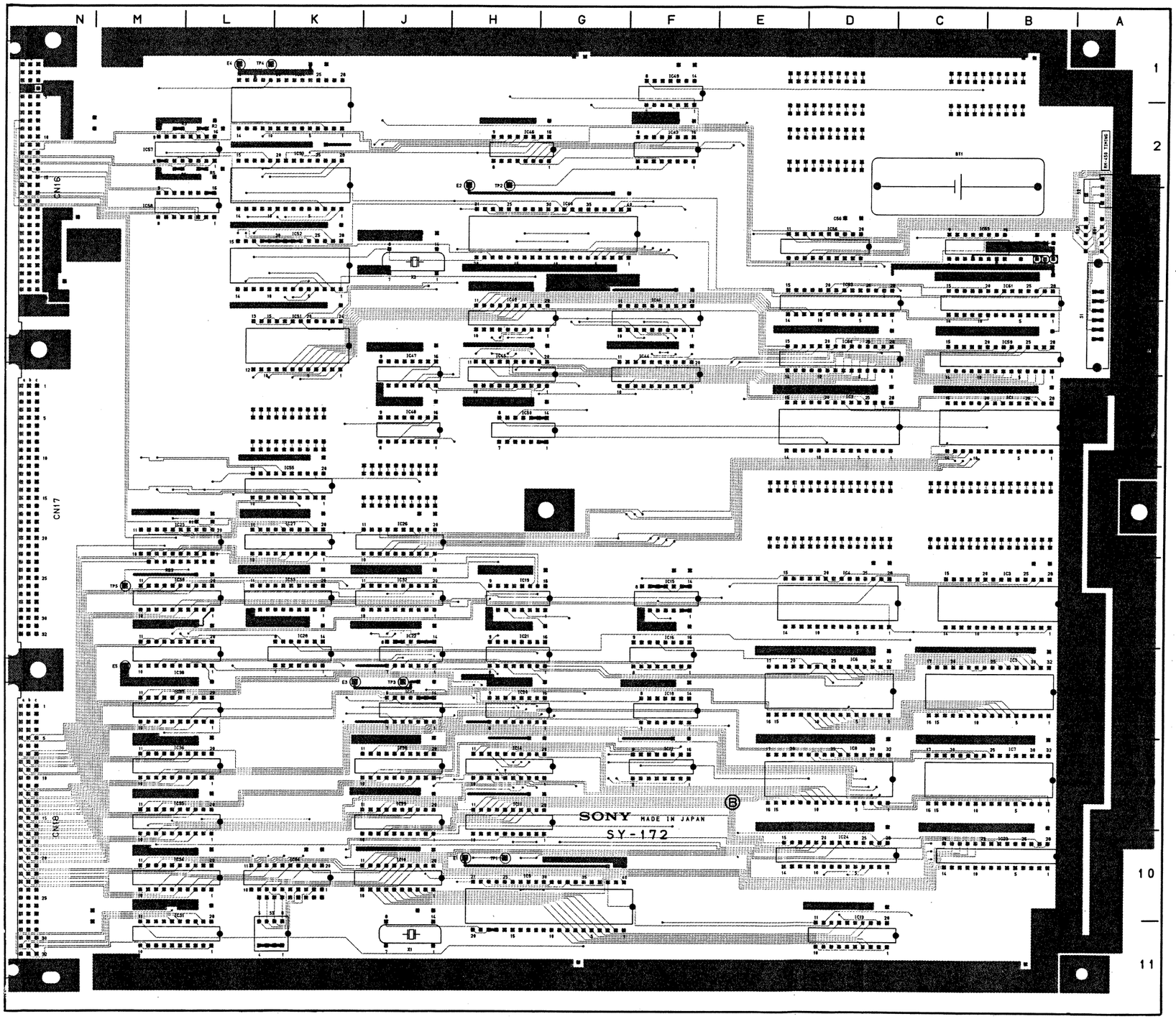

SY-172(1-644-597-11)

BT1	C-2	IC36	M-9
		IC37	M-8
CNI1	B-5	IC38	M-8
CNI2	D-5	IC39	M-7
CNI3	B-7	IC40	G-3
CNI4	D-7	IC41	F-4
CNI5	B-8	IC42	H-4
CNI6	D-8	IC43	F-2
CNI7	B-9	IC44	F-4
CNI8	D-9	IC45	H-4
		IC46	H-2
CN16	N-3	IC47	J-4
CN18	N-10	IC48	J-5
		IC49	F-1
D1	B-3	IC50	H-5
		IC51	K-4
E1	H-10	IC52	K-3
E2	H-3	IC53	K-2
E3	K-8	IC54	K-1
E4	L-1	IC55	K-6
E5	M-8	IC56	D-3
		IC57	M-2
IC1	B-5	IC58	M-3
IC2	D-5	IC59	B-4
IC3	B-7	IC60	D-4
IC4	D-7	IC61	B-3
IC5	B-8	IC62	D-3
IC6	D-8	IC63	C-3
IC7	B-9	IC64	K-10
IC8	D-9		
IC9	H-10	PS1	N-4
IC10	J-10		
IC11	H-9	Q1	B-3
IC12	F-9		
IC13	D-10	RB1	A-3
IC14	H-9	RB2	A-3
IC15	F-7	RB3	M-7
IC16	F-7	RB4	K-10
IC17	J-8		
IC18	F-8	S1	A-4
IC19	H-7	S2	A-3
IC20	H-8	S3	L-10
IC21	H-7		
IC22	J-7	TP1	H-10
IC23	B-10	TP2	H-3
IC24	D-10	TP3	J-8
IC25	M-6	TP4	L-1
IC26	J-6	TP5	M-7
IC27	K-6	X1	J-11
IC28	K-7	X2	J-3
IC29	J-9		
IC30	J-9		
IC31	M-11		
IC32	J-7		
IC33	K-7		
IC34	M-10		
IC35	M-9		

SY-172 -B SIDE-

1-644-597-11

DFS-500/500P

CN-573;Rear Panel Connector

CN-573(1-644-609-11)

CN1	E-3
CN3	*A-1
CN4	E-2
CN6	E-1
CN7	D-2
CN9	C-2
CN11	D-2
CN12	D-2
CN13	C-2
CN14	C-2
CN15	D-3
CN16	D-3
CN17	C-3
CN18	C-3
CN19	*D-5
CN20	*C-5
CN21	C-4
CN22	D-4
CN23	B-4
CN25	B-3
CN27	B-2
CN29	B-5
CN31	A-5
CN33	A-4
CN34	A-2
CN36	A-2
CN37	A-2
CN38	A-3
CN39	A-3
CN40	*E-1
S1	E-3
S2	B-3
S3	B-2

*:SOLDERING SIDE

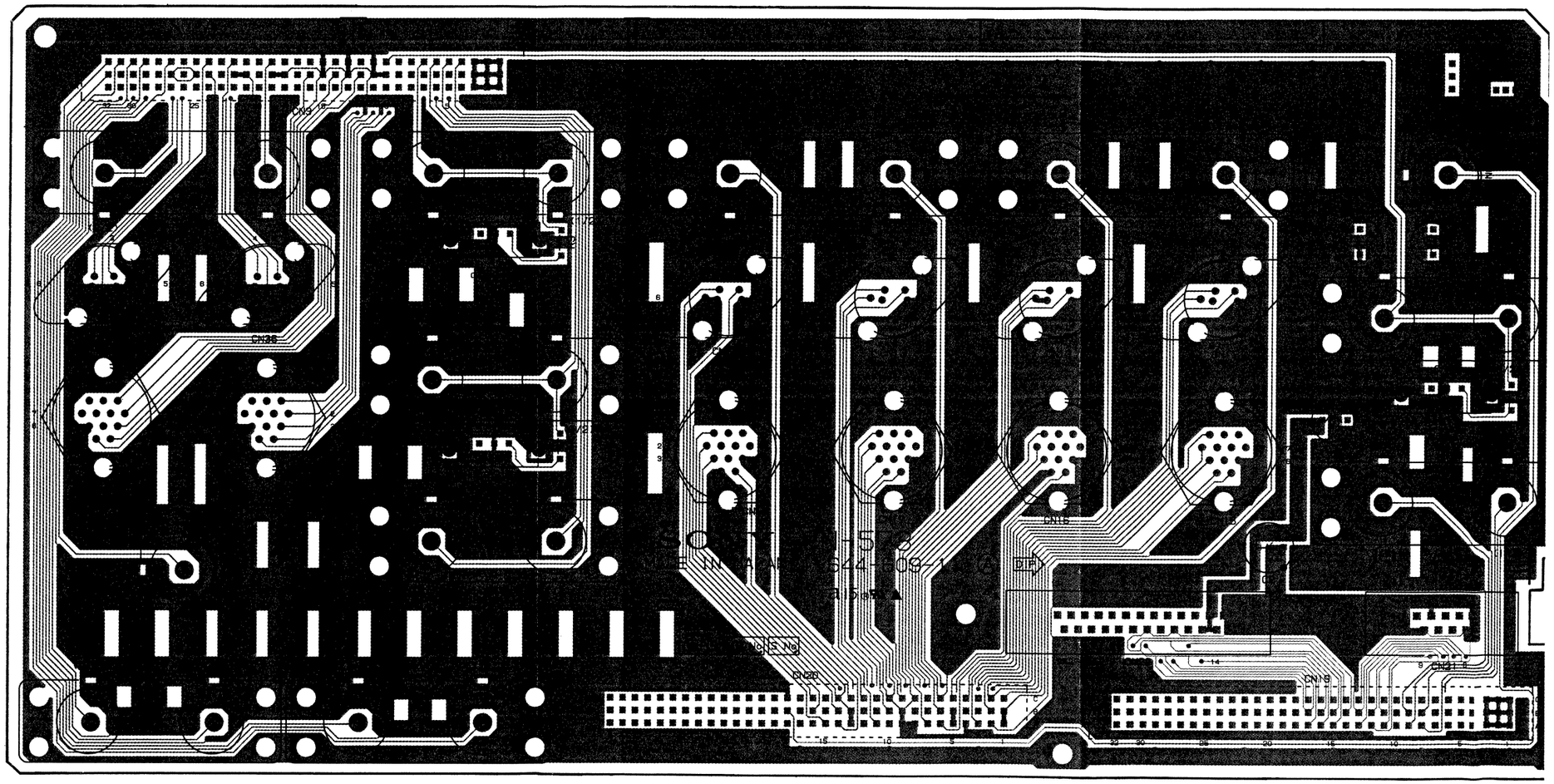

CN-573 -A SIDE
1-644-609-11
DFS-500/500P

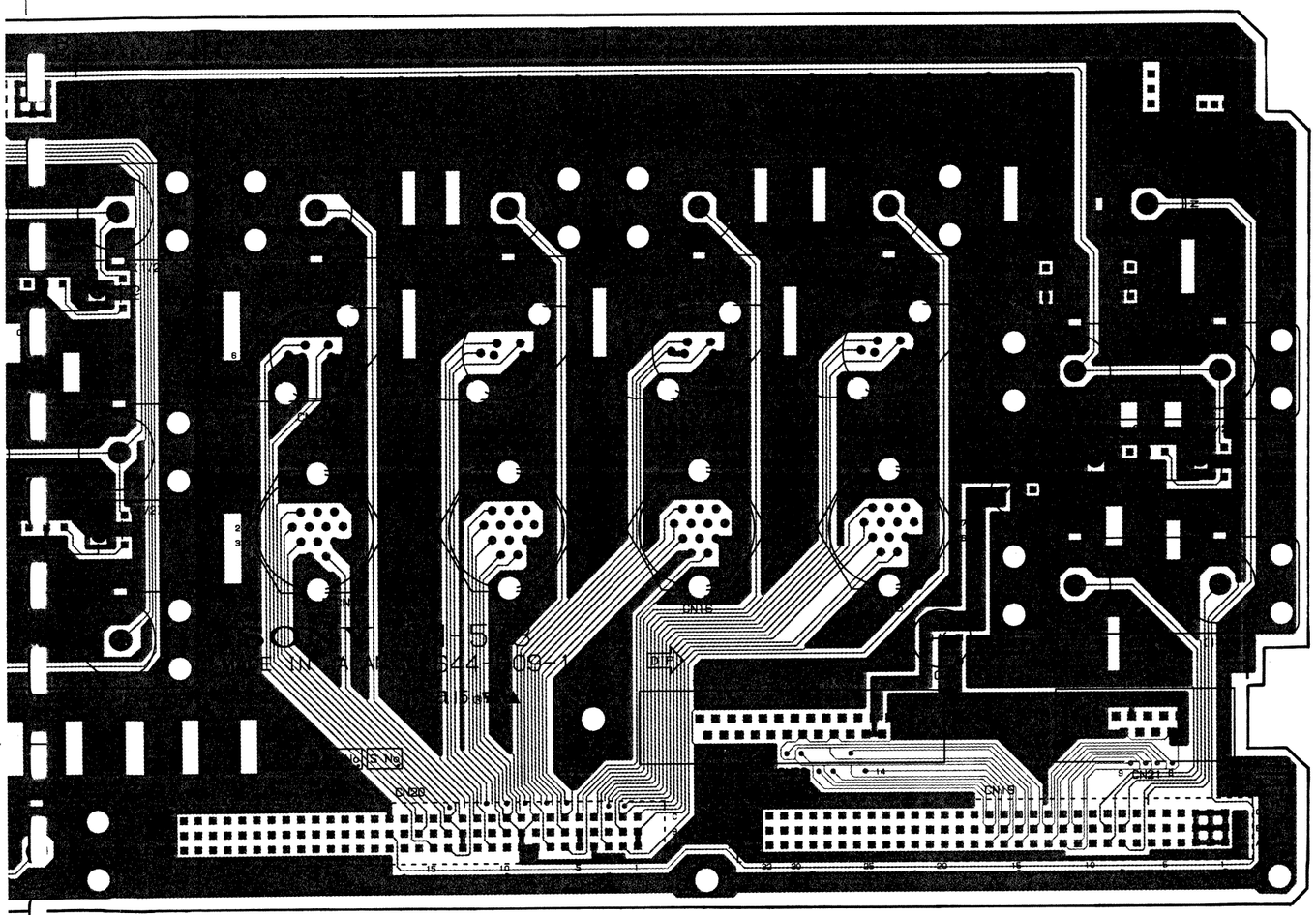

CN-573 -A SIDE-
1-644-609-11
DFS-500/500P

CN-573;Rear Panel Connector

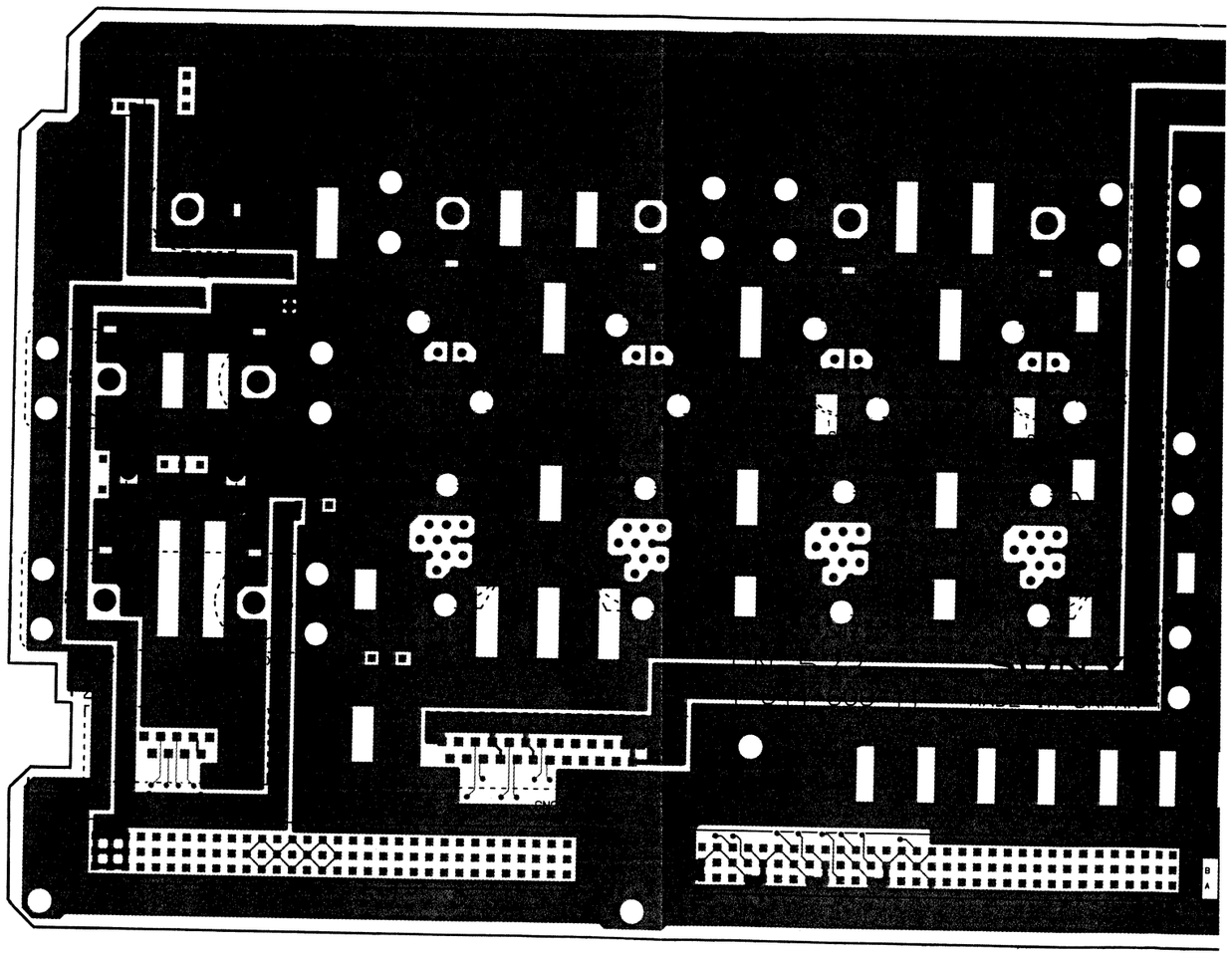

CN-573;Rear Panel Connector

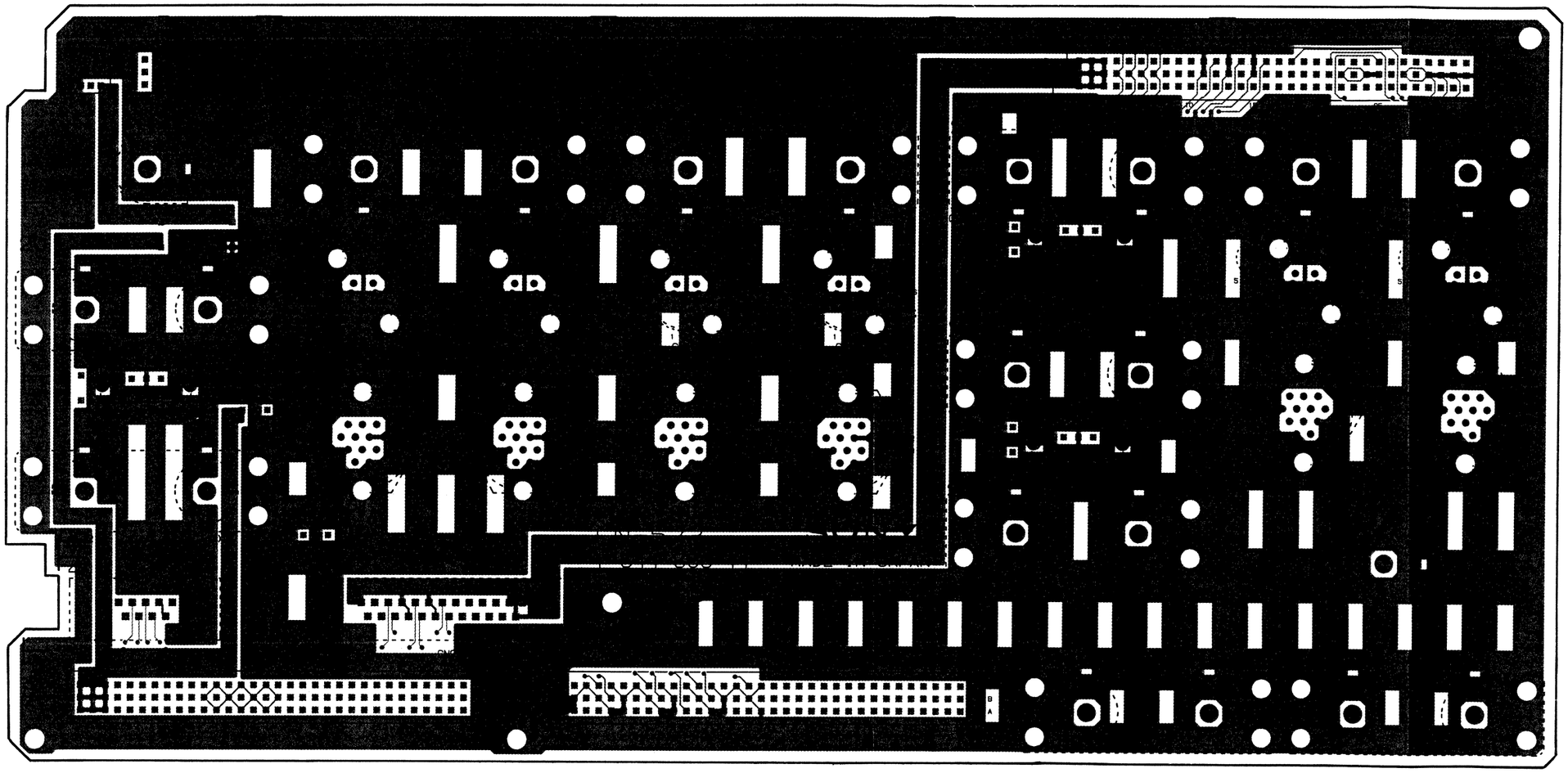

CN-573 -B SIDE-
1-644-609-11
DFS-500/500P

CN-573(1-644-609-11)

CN1	E-3
CN3	*A-1
CN4	E-2
CN6	E-1
CN7	D-2
CN9	C-2
CN11	D-2
CN12	D-2
CN13	C-2
CN14	C-2
CN15	D-3
CN16	D-3
CN17	C-3
CN18	C-3
CN19	*D-5
CN20	*C-5
CN21	C-4
CN22	D-4
CN23	B-4
CN25	B-3
CN27	B-2
CN29	B-5
CN31	A-5
CN33	A-4
CN34	A-2
CN36	A-2
CN37	A-2
CN38	A-3
CN39	A-3
CN40	*E-1
S1	E-3
S2	B-3
S3	B-2

*:SOLDERING SIDE

MB-385;Mother Board

MB-385(1-644-603-11)

CN1	A-1
CN2	B-1
CN3	C-1
CN4	A-2
CN5	B-2
CN6	C-2
CN7	A-3
CN8	B-3
CN9	C-3
CN10	A-4
CN11	B-4
CN12	C-4
CN13	A-5
CN14	B-5
CN15	C-5
CN16	A-6
CN18	C-6
CN19	A-7
CN20	B-7
CN21	C-7
CN22	A-1
CN23	A-2
CN24	A-3
CN25	A-5

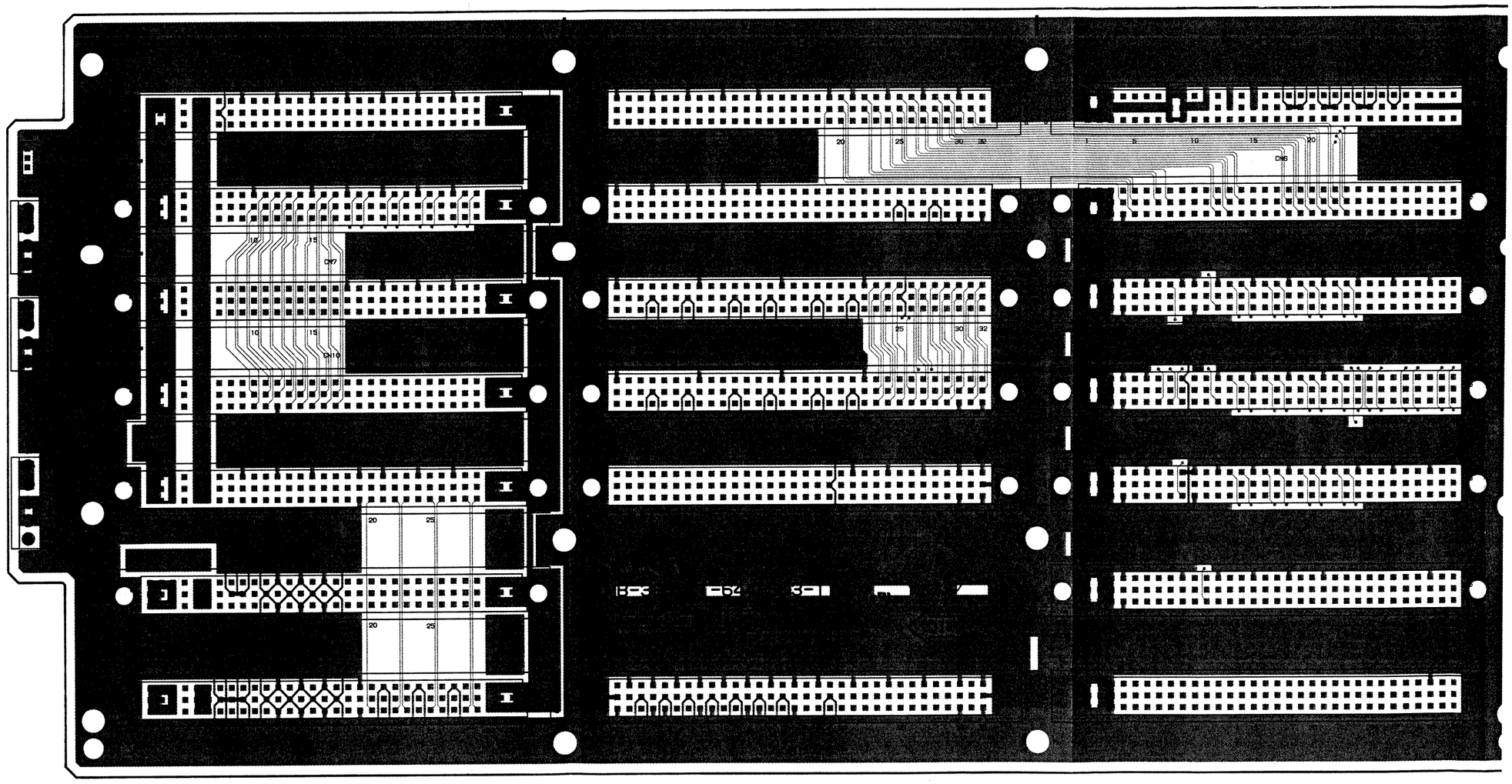

MB-385 -A SI
1-644-603-11
DFS-500/500P

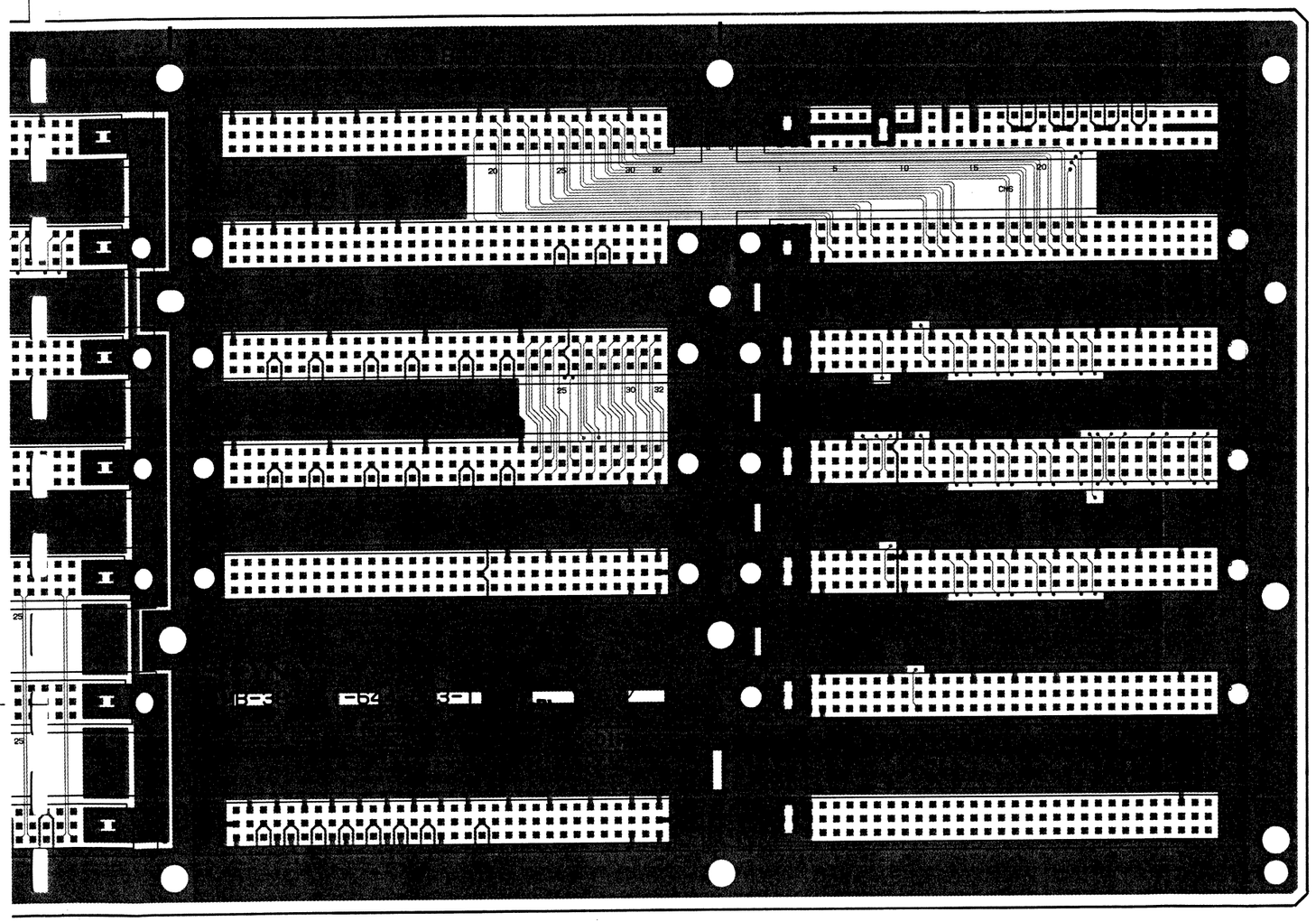

MB-385 -A SIDE-
1-644-603-11
DFS-500/500P

MB-385;Mother Board

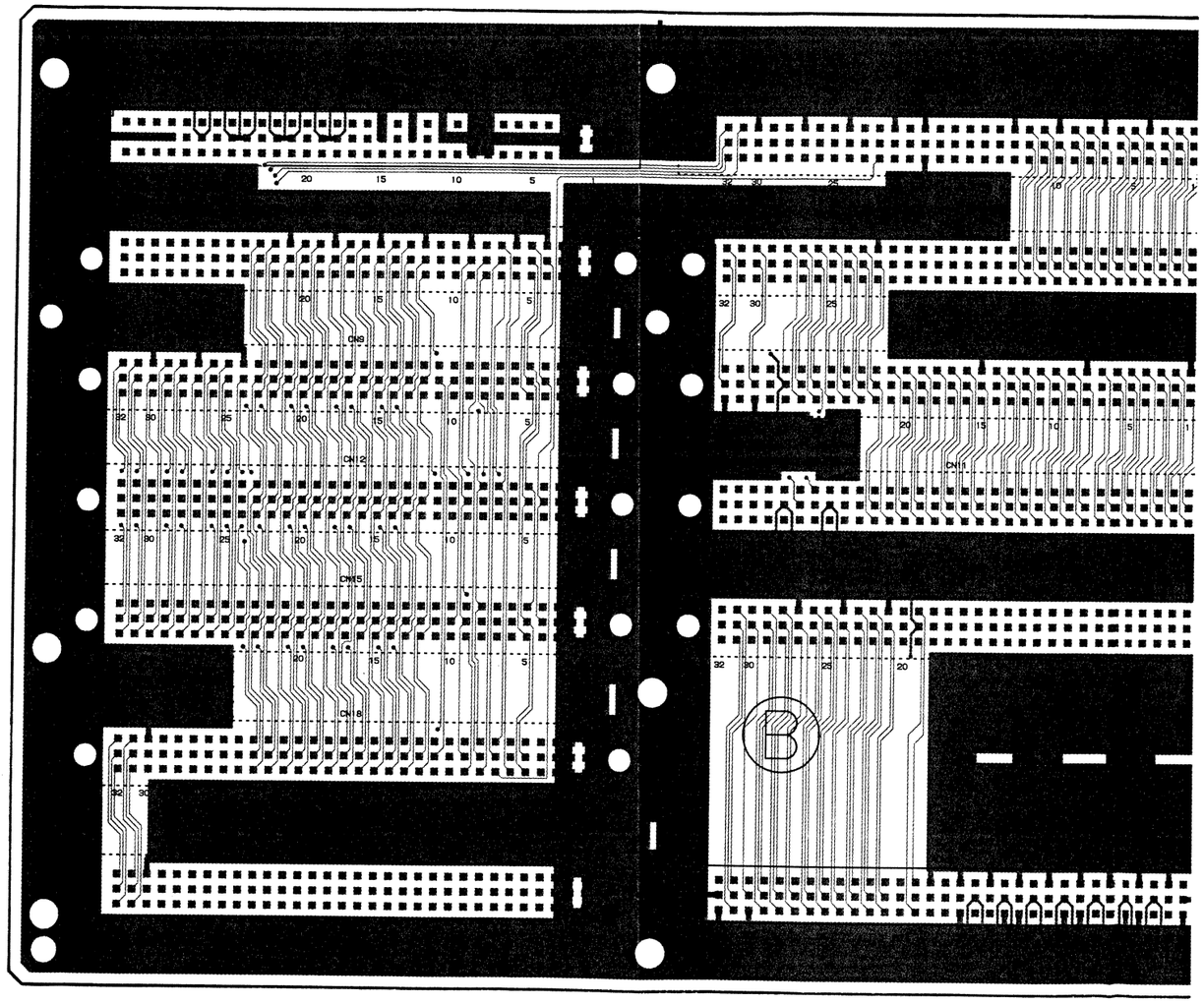

MB-385;Mother Board

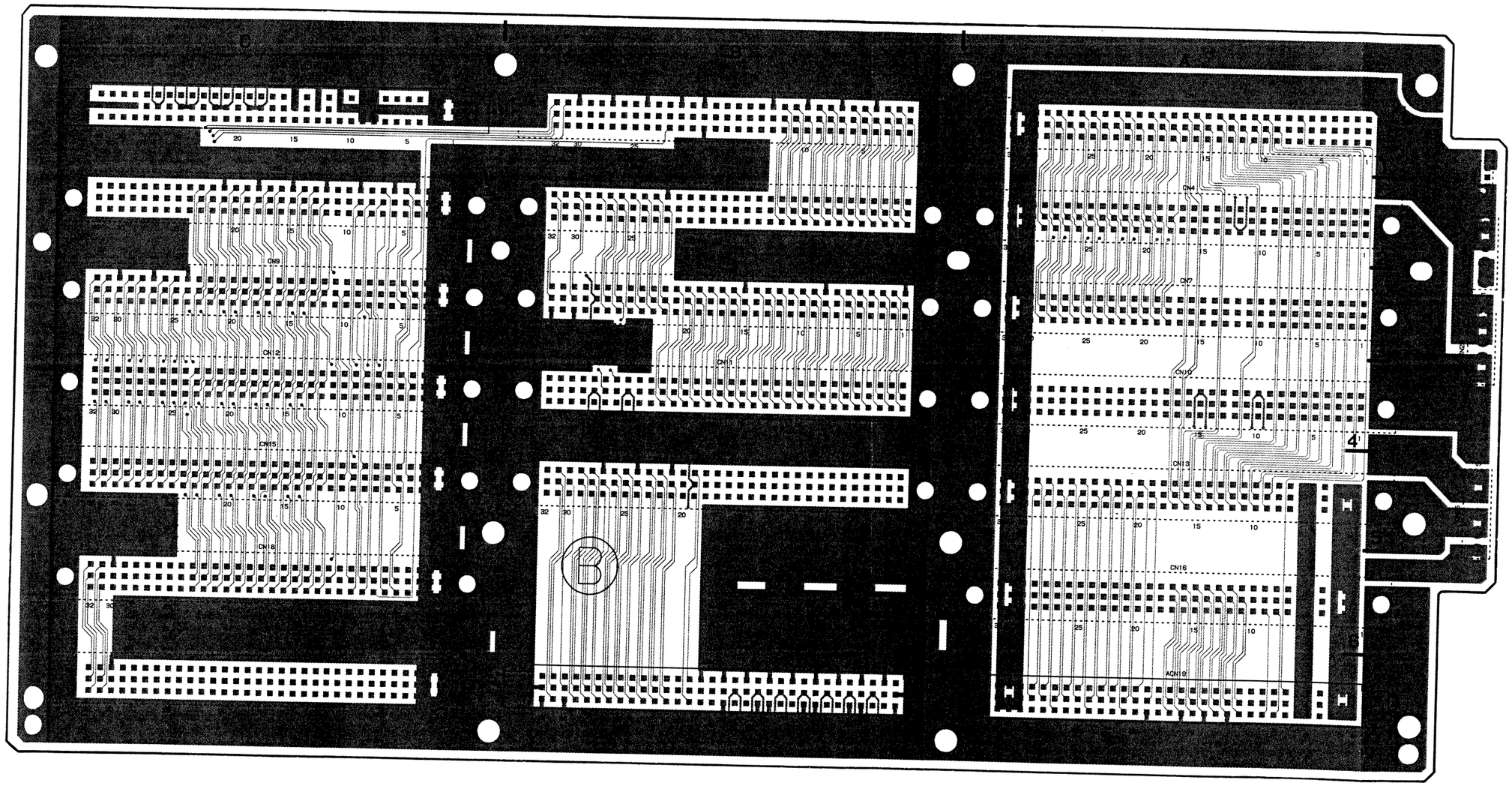

MB-385 -B SIDE-
1-644-603-11
DFS-500/500P

MB-385(1-644-603-11)

CN1	A-1
CN2	B-1
CN3	C-1
CN4	A-2
CN5	B-2
CN6	C-2
CN7	A-3
CN8	B-3
CN9	C-3
CN10	A-4
CN11	B-4
CN12	C-4
CN13	A-5
CN14	B-5
CN15	C-5
CN16	A-6
CN18	C-6
CN19	A-7
CN20	B-7
CN21	C-7
CN22	A-1
CN23	A-2
CN24	A-3
CN25	A-5

KY-223(1-644-604-11)

BZ1	*M-2	IC6	G-2	IC69	C-5	S49	C-6
		IC7	H-2	IC70	E-8	S50	D-7
CNI14	*D-2	IC8	H-2	IC71	E-8	S51	E-8
		IC9	F-2	IC72	E-5	S52	F-8
CN1	*E-2	IC10	J-2	IC73	E-7	S53	E-7
CN2	*H-1	IC11	H-2	IC74	E-7	S54	F-7
CN3	*E-1	IC12	H-2	IC75	E-5	S55	G-8
CN4	*C-1	IC13	G-3	IC76	E-6	S56	G-7
CN5	*A-5	IC14	*D-2	IC77	H-5	S57	K-5
CN6	*H-6	IC15	F-2	IC78	G-6	S58	L-7
CN7	*D-5	IC16	G-2	IC79	G-7	S59	L-7
CN8	*N-3	IC17	G-2	IC80	G-7	S60	L-7
CN9	*K-6	IC18	H-3	IC81	H-9	S61	L-7
		IC19	J-1	IC82	H-8	S62	L-7
D38	C-3	IC20	M-2	IC83	M-9	S63	L-7
D39	C-3	IC21	M-3	IC84	M-9	S64	L-7
D40	C-3	IC22	N-1	IC85	M-8	S65	L-7
D46	H-3	IC23	M-1	IC86	M-8	S66	L-7
D47	H-3	IC24	M-2	IC87	K-8	S67	L-7
D48	H-2	IC25	L-1	IC88	K-6	S68	L-7
D50	E-4	IC26	M-1	IC89	N-2	S69	L-7
D51	E-3	IC27	L-2	IC90	M-4	S70	L-6
D52	E-3	IC28	M-2	IC91	G-5	S71	L-6
D53	E-2	IC29	L-1			S72	L-6
D54	F-4	IC30	L-2	ND7	M-4	S73	L-6
D55	G-3	IC31	M-2	ND8	M-4	S74	K-4
D56	G-3	IC32	L-2	ND9	M-4		
D57	F-2	IC33	M-2	ND10	L-4	X1	K-1
D58	D-3	IC34	L-3	ND11	F-6		
D59	D-3	IC35	G-4	ND12	F-6	*:SOLDERING SIDE	
D60	D-3	IC36	F-5	ND13	E-6		
D61	D-3	IC37	E-5				
D62	D-3	IC38	B-5	PS1	*D-2		
D67	J-3	IC39	C-7				
D68	J-3	IC40	F-9	S20	A-4		
D69	J-3	IC41	L-9	S21	A-3		
D80	D-7	IC42	K-9	S22	B-4		
D81	D-6	IC43	G-3	S23	B-3		
D82	D-6	IC44	H-4	S24	A-5		
D86	E-7	IC45	B-1	S25	B-4		
D88	F-7	IC46	B-1	S26	G-4		
D90	G-6	IC47	A-1	S27	G-3		
D92	K-8	IC48	L-5	S28	G-4		
D93	K-7	IC49	K-5	S29	G-3		
D94	K-7	IC50	L-3	S30	G-4		
D95	K-7	IC51	L-4	S31	H-4		
D101	K-2	IC52	M-3	S32	F-4		
D102	N-1	IC53	M-3	S33	E-4		
D214	H-7	IC54	N-3	S34	F-4		
D224	H-6	IC55	N-4	S35	C-4		
D235	J-3	IC56	L-3	S36	C-5		
E1	B-3	IC57	K-4	S37	N-5		
E2	B-8	IC58	A-4	S38	J-4		
E3	G-6	IC59	C-4	S39	J-4		
E4	L-3	IC60	D-4	S40	A-7		
E5	L-8	IC61	D-3	S41	B-7		
		IC62	A-2	S42	B-7		
IC1	B-2	IC63	A-3	S43	C-7		
IC2	L-3	IC64	A-7	S44	C-7		
IC3	*K-3	IC65	B-7	S45	A-6		
IC4	C-2	IC66	A-8	S46	B-6		
IC5	D-1	IC67	B-8	S47	B-6		
		IC68	C-5	S48	C-6		

KY-223;Function Key

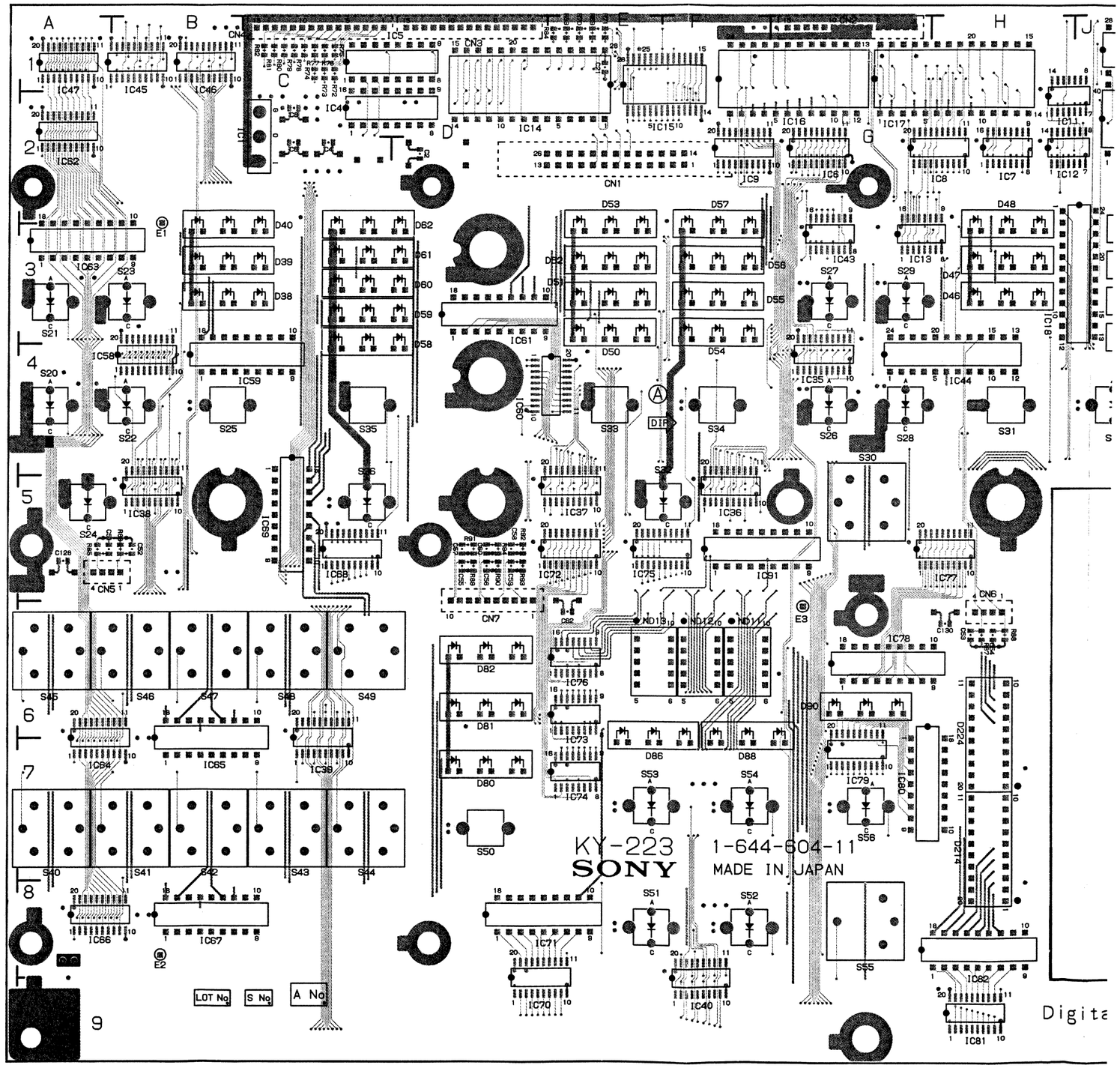

2 ;Function Key

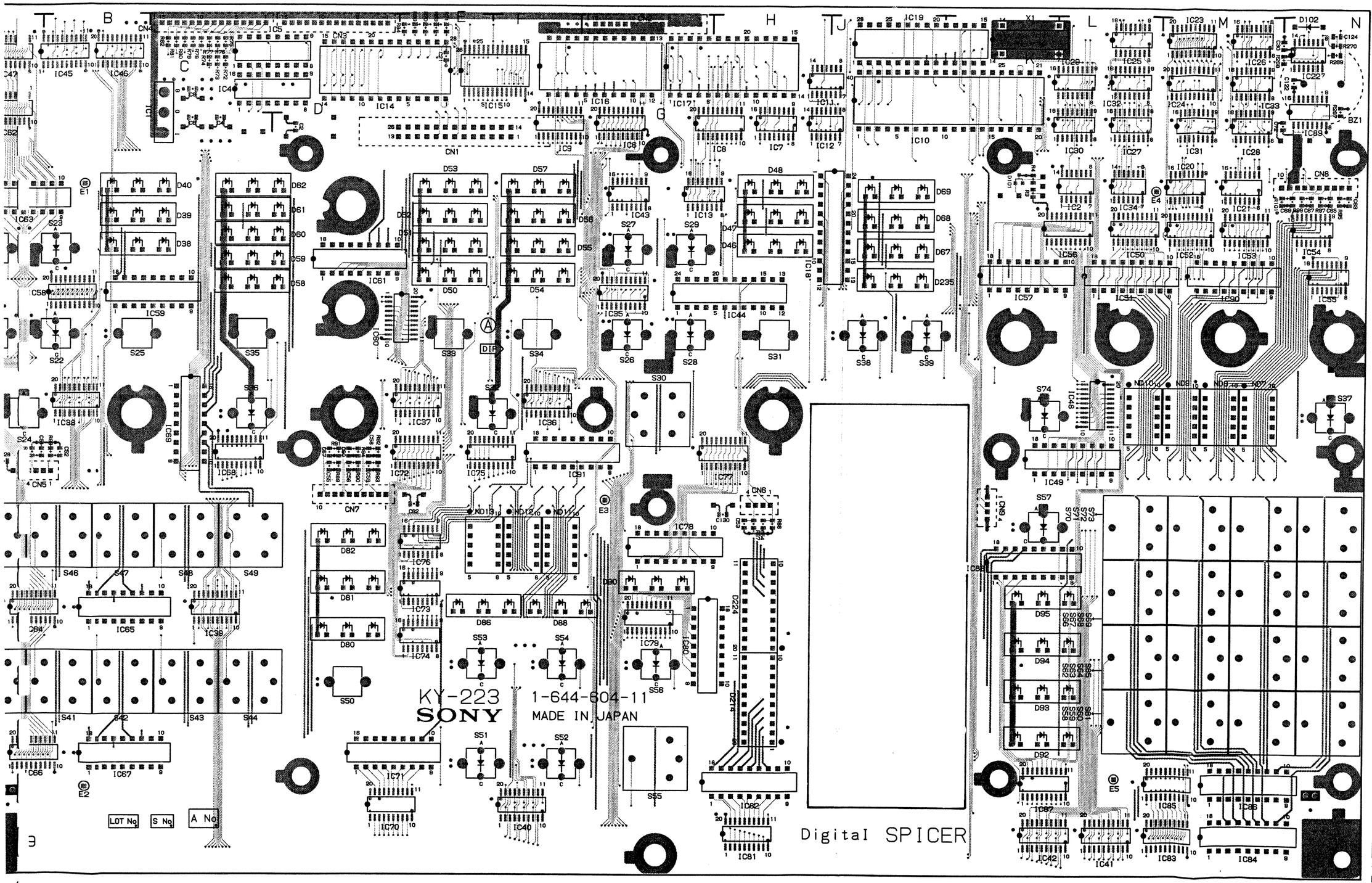

KY-223 -A SIDE-
1-644-604-11
DFS-500/500P

KY-223;Function Key

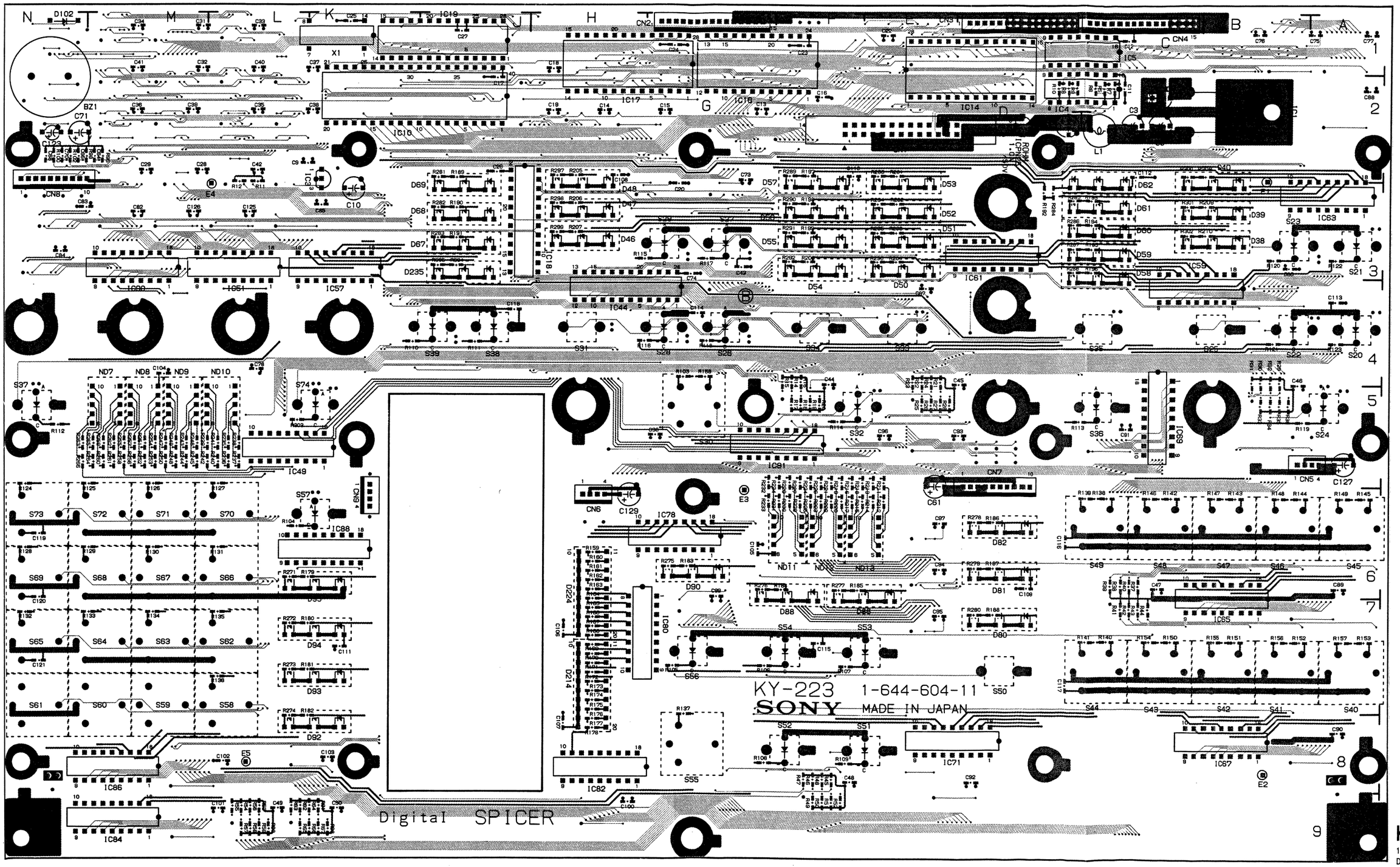

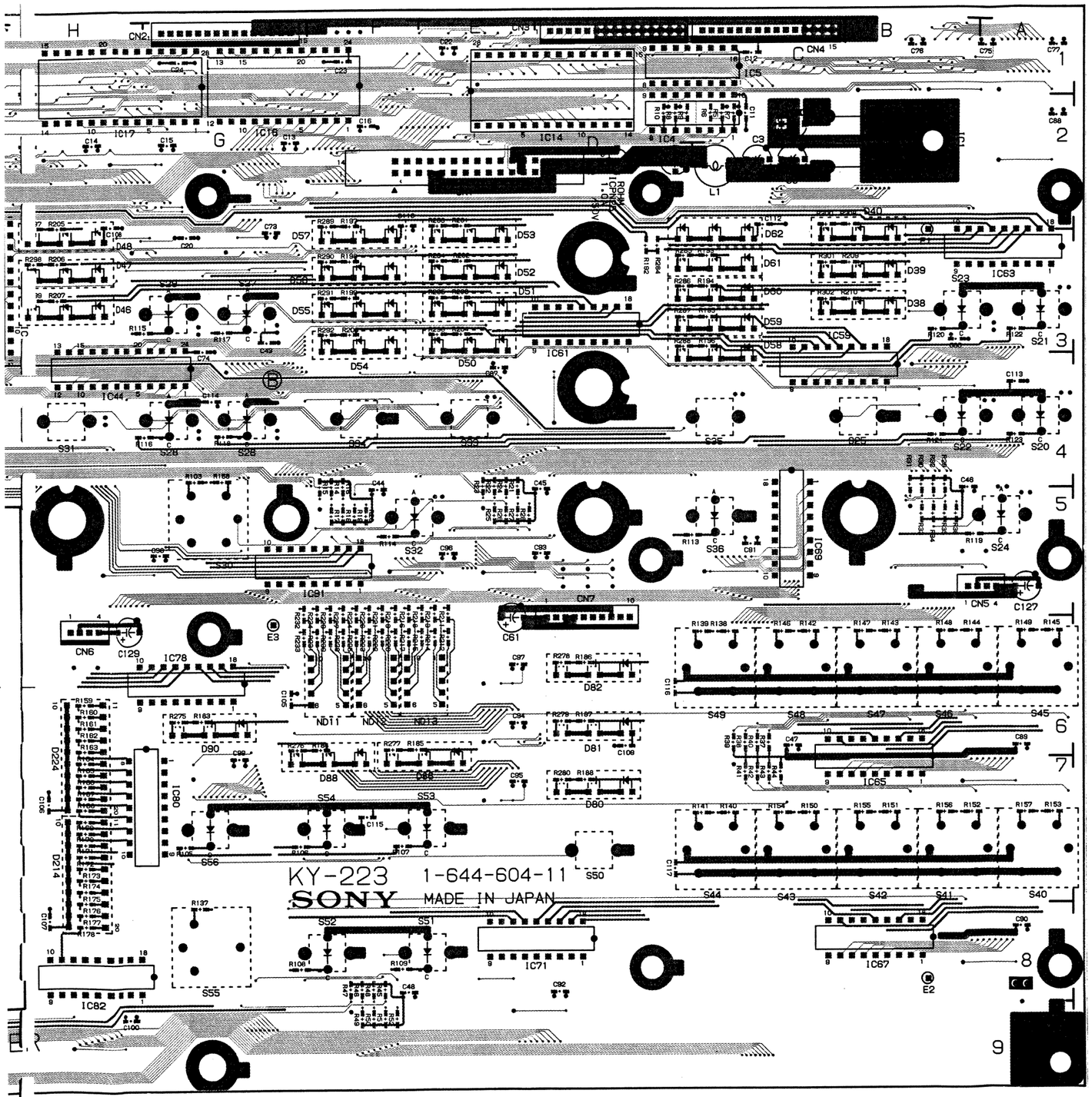

KY-223(1-644-604-11)

BZ1	*M-2	IC6	G-2	IC69	C-5	S49	C-6
		IC7	H-2	IC70	E-8	S50	D-7
CNI14	*D-2	IC8	H-2	IC71	E-8	S51	E-8
		IC9	F-2	IC72	E-5	S52	F-8
CN1	*E-2	IC10	J-2	IC73	E-7	S53	E-7
CN2	*H-1	IC11	H-2	IC74	E-7	S54	F-7
CN3	*E-1	IC12	H-2	IC75	E-5	S55	G-8
CN4	*C-1	IC13	G-3	IC76	E-6	S56	G-7
CN5	*A-5	IC14	*D-2	IC77	H-5	S57	K-5
CN6	*H-6	IC15	F-2	IC78	G-6	S58	L-7
CN7	*D-5	IC16	G-2	IC79	G-7	S59	L-7
CN8	*N-3	IC17	G-2	IC80	G-7	S60	L-7
CN9	*K-6	IC18	H-3	IC81	H-9	S61	L-7
		IC19	J-1	IC82	H-8	S62	L-7
D38	C-3	IC20	M-2	IC83	M-9	S63	L-7
D39	C-3	IC21	M-3	IC84	M-9	S64	L-7
D40	C-3	IC22	N-1	IC85	M-8	S65	L-7
D46	H-3	IC23	M-1	IC86	M-8	S66	L-7
D47	H-3	IC24	M-2	IC87	K-8	S67	L-7
D48	H-2	IC25	L-1	IC88	K-6	S68	L-7
D50	E-4	IC26	M-1	IC89	N-2	S69	L-7
D51	E-3	IC27	L-2	IC90	M-4	S70	L-6
D52	E-3	IC28	M-2	IC91	G-5	S71	L-6
D53	E-2	IC29	L-1			S72	L-6
D54	F-4	IC30	L-2	ND7	M-4	S73	L-6
D55	G-3	IC31	M-2	ND8	M-4	S74	K-4
D56	G-3	IC32	L-2	ND9	M-4		
D57	F-2	IC33	M-2	ND10	L-4	X1	K-1
D58	D-3	IC34	L-3	ND11	F-6		
D59	D-3	IC35	G-4	ND12	F-6	*:SOLDERING SID	
D60	D-3	IC36	F-5	ND13	E-6		
D61	D-3	IC37	E-5				
D62	D-3	IC38	B-5	PS1	*D-2		
D67	J-3	IC39	C-7				
D68	J-3	IC40	F-9	S20	A-4		
D69	J-3	IC41	L-9	S21	A-3		
D80	D-7	IC42	K-9	S22	B-4		
D81	D-6	IC43	G-3	S23	B-3		
D82	D-6	IC44	H-4	S24	A-5		
D86	E-7	IC45	B-1	S25	B-4		
D88	F-7	IC46	B-1	S26	G-4		
D90	G-6	IC47	A-1	S27	G-3		
D92	K-8	IC48	L-5	S28	G-4		
D93	K-7	IC49	K-5	S29	G-3		
D94	K-7	IC50	L-3	S30	G-4		
D95	K-7	IC51	L-4	S31	H-4		
D101	K-2	IC52	M-3	S32	F-4		
D102	N-1	IC53	M-3	S33	E-4		
D214	H-7	IC54	N-3	S34	F-4		
D224	H-6	IC55	N-4	S35	C-4		
D235	J-3	IC56	L-3	S36	C-5		
E1	B-3	IC57	K-4	S37	N-5		
E2	B-8	IC58	A-4	S38	J-4		
E3	G-6	IC59	C-4	S39	J-4		
E4	L-3	IC60	D-4	S40	A-7		
E5	L-8	IC61	D-3	S41	B-7		
		IC62	A-2	S42	B-7		
IC1	B-2	IC63	A-3	S43	C-7		
IC2	L-3	IC64	A-7	S44	C-7		
IC3	*K-3	IC65	B-7	S45	A-6		
IC4	C-2	IC66	A-8	S46	B-6		
IC5	D-1	IC67	B-8	S47	B-6		
		IC68	C-5	S48	C-6		

KY-223 -B SIDE-
1-644-604-11
DFS-500/500P

KY-225;Switch

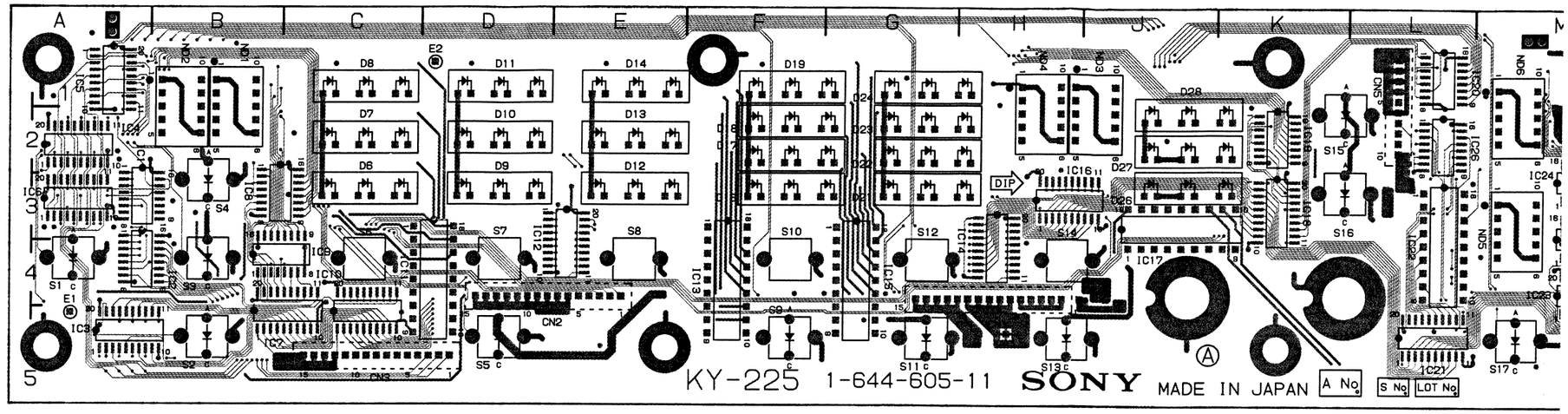

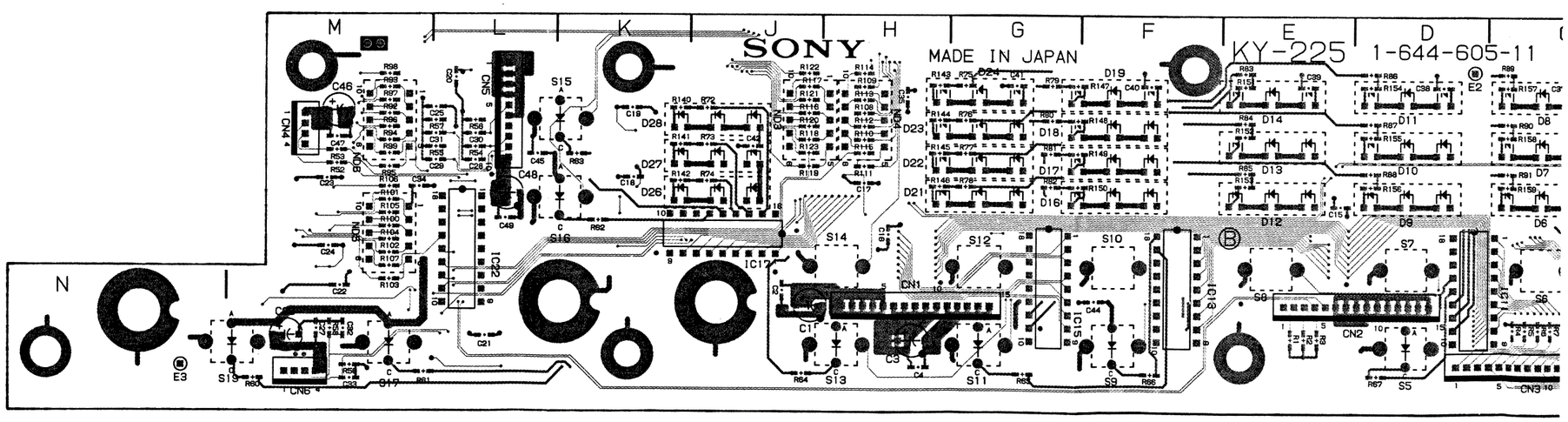

KY-225(1-644-605-11)

CN1	*H-4	IC22	L-3
CN2	*E-5	IC23	M-4
CN3	*C-5	IC24	M-3
CN4	*M-2	IC25	M-3
CN5	*L-1	IC26	L-2
CN6	*M-5		
		ND1	B-1
D6	C-3	ND2	B-2
D7	C-2	ND3	J-1
D8	C-1	ND4	H-1
D9	D-3	ND5	M-3
D10	D-2	ND6	M-1
D11	D-1		
D12	E-3	S1	A-4
D13	E-2	S2	B-5
D14	E-1	S3	B-4
D16	F-3	S4	B-3
D17	F-2	S5	D-5
D18	F-2	S6	C-4
D19	F-1	S7	D-4
D21	G-3	S8	E-4
D22	G-2	S9	F-5
D23	G-2	S10	F-4
D24	G-1	S11	G-5
D26	J-3	S12	G-4
D27	J-2	S13	H-5
D28	J-1	S14	H-4
		S15	K-2
E1	A-5	S16	K-3
E2	D-1	S17	M-5
E3	N-5	S19	M-5
IC1	A-2	*:SOLDERING SIDE	
IC2	B-4		
IC3	A-5		
IC4	A-2		
IC5	A-1		
IC6	A-3		
IC7	B-5		
IC8	B-3		
IC9	C-4		
IC10	C-4		
IC11	C-4		
IC12	D-3		
IC13	F-4		
IC14	H-4		
IC15	G-4		
IC16	H-2		
IC17	J-4		
IC18	K-3		
IC19	K-2		
IC20	L-1		
IC21	L-5		

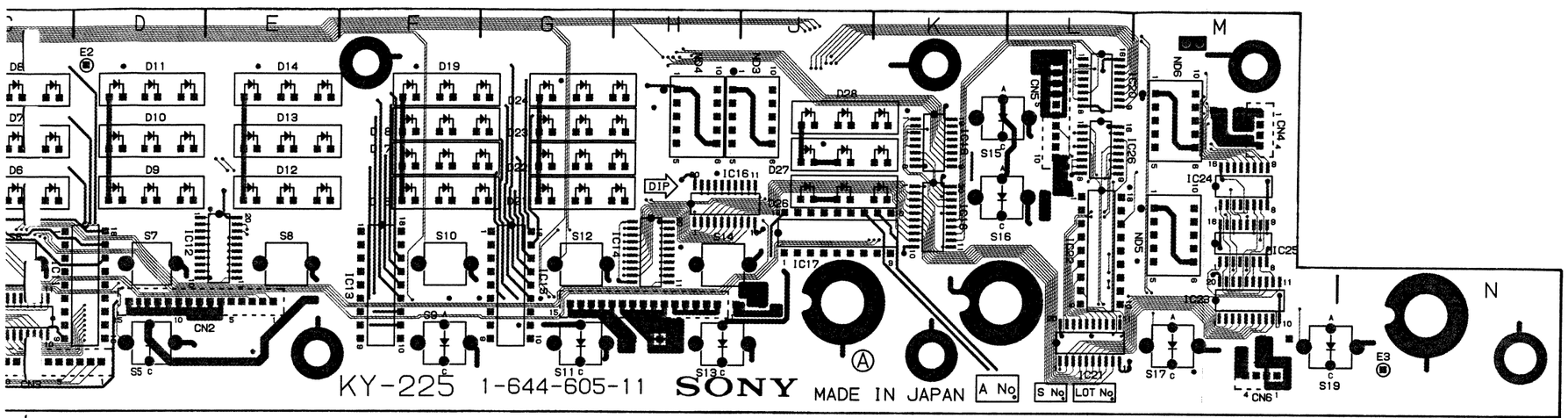

KY-225 -A SIDE-
1-644-605-11
DFS-500/500P

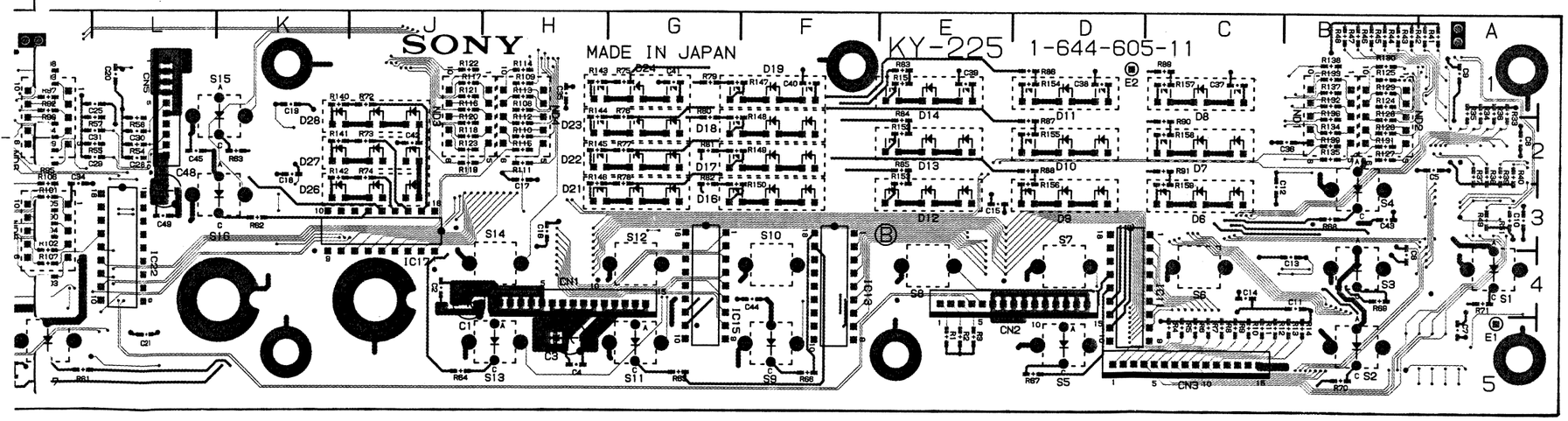

KY-225 -B SIDE-
1-644-605-11
DFS-500/500P

AC-111;Line Filter (For Ek)

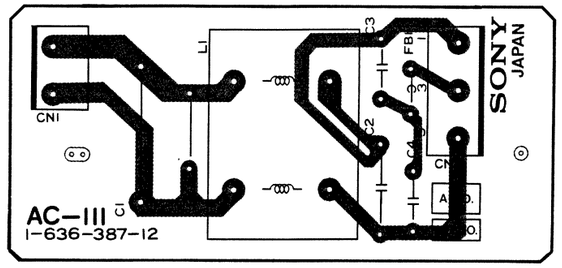

AC-111-A SIDE-
1-636-387-12
DFS-500P

KY-226;Positioner

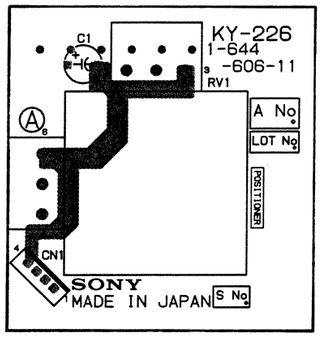

KY-226-A SIDE-
1-644-606-11
DFS-500/500P

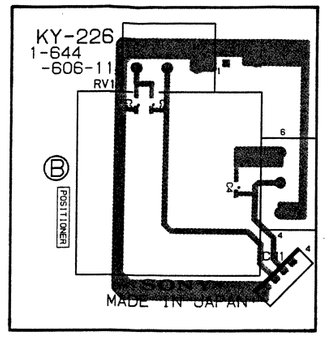

KY-226-B SIDE-
1-644-606-11
DFS-500/500P

LE-55;Power Indicator

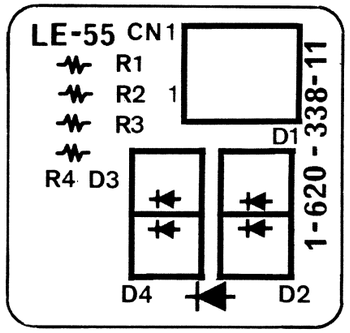

LE-55 -A SIDE-
1-620-338-11
DFS-500/500P

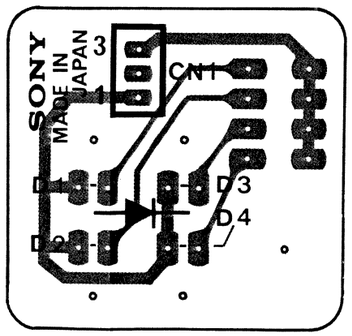

LE-55 -B SIDE-
1-620-338-11
DFS-500/500P

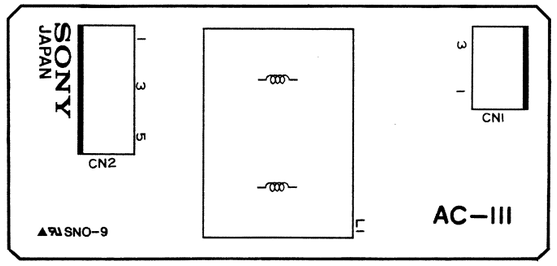

AC-111-B SIDE-
1-636-387-12
DFS-500P

VR-135;Location Control
;Title Control
;DSK(Down Stream Keyer)Control

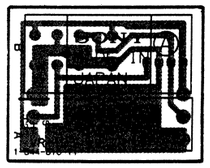

VR-135-A SIDE-
1-644-610-11
DFS-500/500P

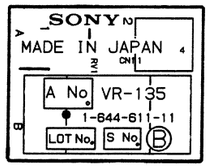

VR-135-B SIDE-
1-644-610-11
DFS-500/500P

VR-136;Edge/Trail/Shadow Control

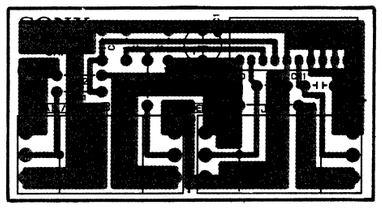

VR-136-A SIDE-
1-644-611-11
DFS-500/500P

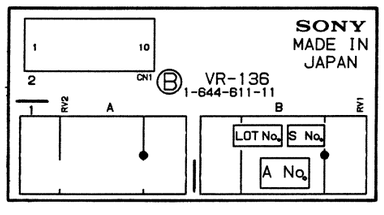

VR-136-B SIDE-
1-644-611-11
DFS-500/500P

VR-137;Mattes/BKGD Control

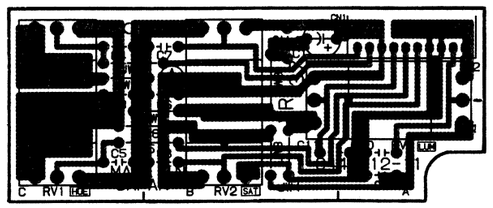

VR-137-A SIDE-
1-644-612-11
DFS-500/500P

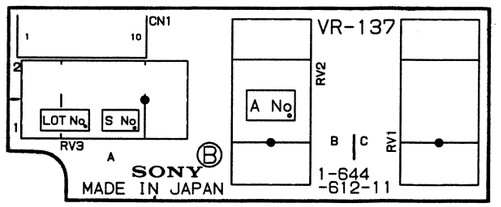

VR-137-B SIDE-
1-644-612-11
DFS-500/500P

VR-138;Effect Control

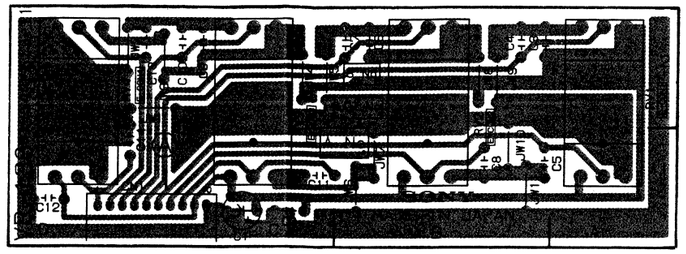

VR-138-A SIDE-
1-644-613-11
DFS-500/500P

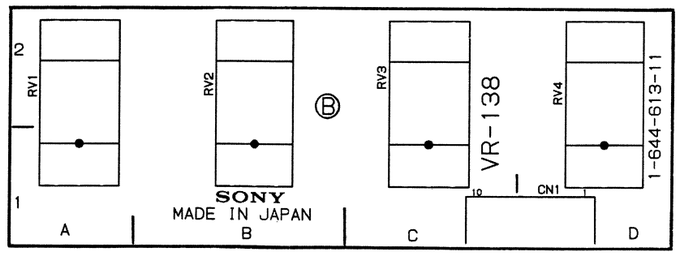

VR-138-B SIDE-
1-644-613-11
DFS-500/500P

SECTION 7
SEMICONDUCTOR PIN ASSIGNMENTS

ここに記載されているIC, トランジスタ, ダイオードは, それぞれの機能を等価的に表したものです。したがって互換性を表すものではありません。(互換性のない型名が併記されている事もあります。) 部品の交換をする時は, SPARE PARTSの章を参照してください。

Cs, transistors and diodes of which functions are equivalent are described here. Therefore, incompatible device names may e described together. For parts replacement, refer to the Spare Parts section in this manual.

IC	PAGE
4F00PC	7-2
4F08PC	7-2
74F32PC	7-2
74F399PC	7-2
AM26LS31PC	7-2
AM26LS32PC	7-2
BX-1040	7-3
BX-1291	7-2
BX-1356	7-2
BX-1461	7-3
CX22017	7-3
CX23043	7-3
CXA1106M	7-3
CXA1260Q-Z	7-4
CXA1451M	7-7
CXD1175AM	7-4
CXD1216M	7-5
CXD1217M	7-6
CXD2105AQ	7-8
CXD8031Q	7-5
CXD8033Q	7-7
CXD8054	7-9
CXD8070K	7-10
CXD8262Q	7-11
CXD8263Q	7-12
CXD8264Q	7-9
CXD8265Q	7-13
CXD8266Q	7-14
CXD8267Q	7-15
CXD8276Q	7-15
CXK1203Q	7-10
CXK1206AM	7-16
CXK54256P-35	7-16
CXK5464AP-35	7-17
CXK5814P-35	7-17
CXK58257AM-12LL	7-17
CXK58258AP-25	7-16
CXK5863P-25	7-18
CXK5864BSP-70L	7-18
CXQ70108P-8	7-19
CXQ70116P-10	7-20
CXQ71051P	7-21
CXQ71054P	7-21
HD14053BFP	7-22
IB-38	7-22
LM1881M	7-22
LM311PS	7-22
LM358PS	7-22
LM6361M	7-22
M27C4001-12F1	7-22
M51271FP	7-23
MAX691CPE	7-23
MBM27C256A-25CZ-X	7-24
MC14052BF	7-23
MC74HC113F	7-24
MC74HC154N	7-24
N74F377N	7-24
NJM13700M	7-25
NJM2233BM	7-25
NJM2234M	7-25
NJM2235M	7-25
NJM2245M	7-25
NJM2246M	7-25
NJM360M	7-25
NJM78L05A	7-25
NJM78L09A	7-25
NJM7905FA	7-25
NJM7909FA	7-25
NJM79L09A	7-25
PAL16L8BCN	7-26
PST523C	7-26
SC7S00F	7-26
SI-3522V	7-26
SM5828P	7-26
SN74ALS00AN	7-2
SN74ALS04BN	7-27
SN74ALS08N	7-2
SN74ALS10AN	7-27
SN74ALS11AN	7-27
SN74ALS138N	7-27
SN74ALS139NS	7-27
SN74ALS151N	7-27
SN74ALS153N	7-28
SN74ALS157AN	7-28
SN74ALS161BN	7-28
SN74ALS174N	7-28
SN74ALS175N	7-28
SN74ALS21AN	7-28
SN74ALS244BN	7-29
SN74ALS244BNS	7-29
SN74ALS32N	7-2
SN74ALS374AN	7-29
SN74ALS574BNS	7-29
SN74ALS74AN	7-29
SN74HC00ANS	7-29
SN74HC02ANS	7-29
SN74HC03NS	7-29
SN74HC04ANS	7-30
SN74HC10ANS	7-30
SN74HC113NS	7-24
SN74HC132ANS	7-30
SN74HC138ANS	7-30
SN74HC163ANS	7-30
SN74HC164ANS	7-30
SN74HC175ANS	7-31
SN74HC20ANS	7-31
SN74HC21ANS	7-31
SN74HC244ANS	7-31
SN74HC245ANS	7-31
SN74HC32ANS	7-31
SN74HC375ANS	7-31
SN74HC4075ANS	7-32
SN74HC573BNS	7-32
SN74HC574ANS	7-32
SN74HC74ANS	7-32
SN74HCT574ANS	7-32
SN74LS00N	7-2
SN74LS04N	7-27
SN74LS08N	7-2
SN74LS10N	7-27
SN74LS138N	7-27
SN74LS139AN	7-27
SN74LS14NS	7-32
SN74LS164N	7-32
SN74LS174N	7-28
SN74LS175N	7-28
SN74LS194AN	7-33
SN74LS20N	7-33
SN74LS21N	7-28
SN74LS221NS	7-33
SN74LS244N	7-29
SN74LS245N	7-33
SN74LS247NS	7-33
SN74LS283NS	7-34
SN74LS32N	7-2
SN74LS373N	7-34
SN74LS374N	7-29
SN74LS375N	7-34
SN74LS684N	7-34
SN74LS74AN	7-29
SN74LS74ANS	7-29
TA7805S	7-34
TC4584BF	7-34
TC4S66F	7-35
TC74HC191AF	7-35
TC74HC221AF	7-35
TD62083AP	7-35
TL082CPS	7-36
TMS27C512-20JL	7-35
UPC1037HA	7-36
UPC311G2	7-36
UPD7004C	7-36
UPD71059C	7-37
XRA17809T	7-36
TRANSISTOR	
2SA1162G	7-37
2SA1462	7-37
2SA952	7-37
2SC1623	7-37
2SC2757	7-37
2SK508	7-37
2SK94	7-37
DIODE	
1S2836	7-38
1SS119	7-38
1SS226	7-38
FC54M	7-38
LD-701MG	7-38
LD-010MW	7-38
MA152WK	7-38
RD??ESB?	7-38
RD??M-B?	7-38
RD??MB	7-38
TLR214	7-38
TLY123	7-38

等価回路はICメーカーのData Bookに従いました。

The circuit diagram of each IC is obtained from the IC data book published by the manufacturer.

IC

74F00PC (NS)
SN74ALS00AN (TI)
SN74LS00N (TI)

TTL 2-INPUT POSITIVE-NAND GATE
- TOP VIEW -

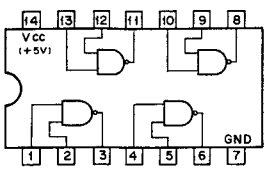

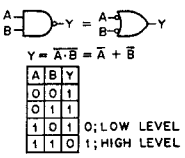

A	B	Y
0	0	1
0	1	1
1	0	1
1	1	0

0; LOW LEVEL
1; HIGH LEVEL

74F08PC (NS)
SN74ALS08N (TI)
SN74LS08N (TI)

TTL 2-INPUT POSITIVE-AND GATE
- TOP VIEW -

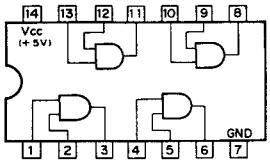

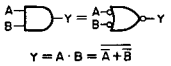

A	B	Y
0	0	0
0	1	0
1	0	0
1	1	1

0; LOW LEVEL
1; HIGH LEVEL

74F32PC (NS)
SN74ALS32N (TI)
SN74LS32N (TI)

TTL 2-INPUT POSITIVE-OR GATE
- TOP VIEW -

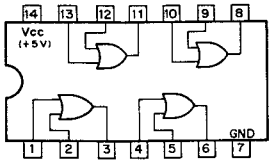

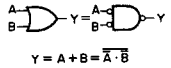

A	B	Y
0	0	0
0	1	1
1	0	1
1	1	1

0; LOW LEVEL
1; HIGH LEVEL

74F399PC (NS)

TTL QUAD 2-INPUT MULTIPLEXERS WITH STORAGE
- TOP VIEW -

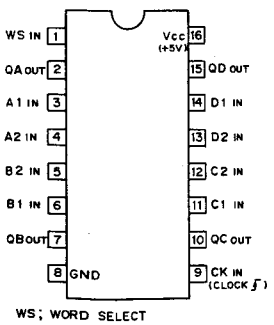

WS; WORD SELECT

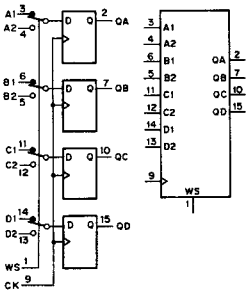

INPUTS		OUTPUTS			
WS	CK	QA	QB	QC	QD
0	∫	A1	B1	C1	D1
1	∫	A2	B2	C2	D2
X	0	QA0	QB0	QC0	QD0

1; HIGH LEVEL
0; LOW LEVEL
X; DON T CARE

AM26LS31PC (ADVANCED MICRO DEVICES)

HIGH SPEED DIFFERENTIAL LINE DRIVER
- TOP VIEW -

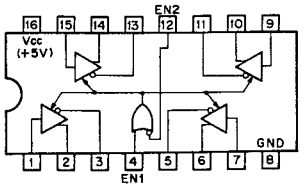

EN2	EN1	OUTPUT
0	0	ENABLE
0	1	ENABLE
1	0	HI-Z
1	1	ENABLE

0; LOW LEVEL
1; HIGH LEVEL
HI-Z; HIGH IMPEDANCE

AM26LS32PC (ADVANCED MICRO DEVICES)

HIGH SPEED DIFFERENTIAL LINE RECEIVER
- TOP VIEW -

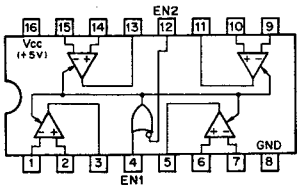

EN2	EN1	OUTPUT
0	0	ENABLE
0	1	ENABLE
1	0	HI-Z
1	1	ENABLE

0; LOW LEVEL
1; HIGH LEVEL
HI-Z; HIGH IMPEDANCE

	SENSE	INPUT VOLT
LS32	±200mV	± 7V
LS33	±500mV	±15V

BX1291 (SONY)

APC AMPLIFIER AND SC 0/180° SELECTOR
- REAR VIEW -

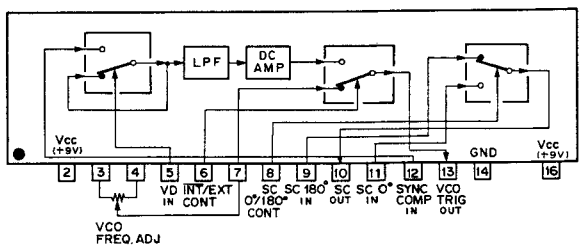

BX1356 (SONY)

VIDEO OUTPUT AMPLIFIER
- PRINTED SIDE -

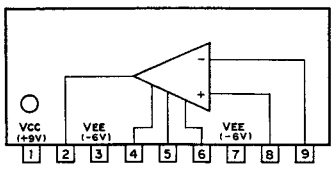

K1040 (SONY)
SYNC SEPARATOR
– REAR VIEW –

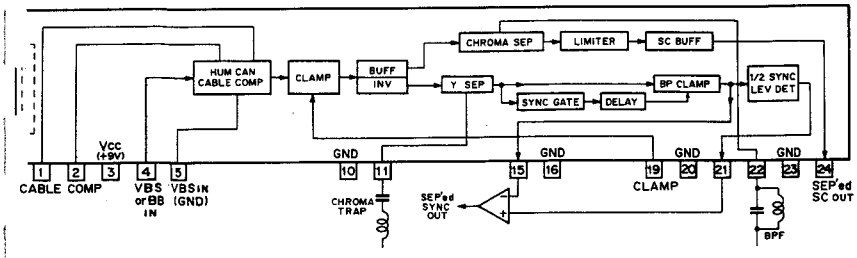

CX22017 (SONY)
VIDEO SIGNAL PROCESSOR
TOP VIEW –

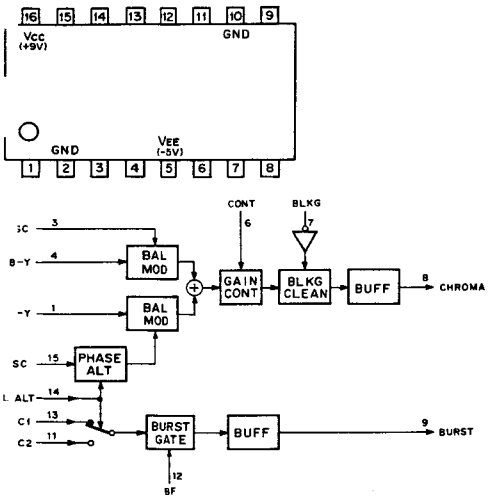

BX1461 (SONY)
PHASE DETECTOR
– PRINTED SIDE –

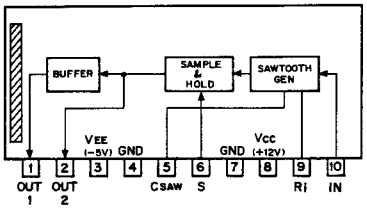

CXA1106M (SONY) FLAT PACKAGE
8-BIT D/A CONVERTER (TTL INPUT)
– TOP VIEW –

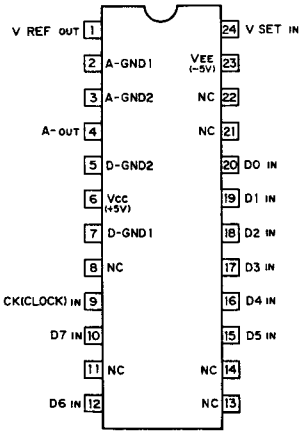

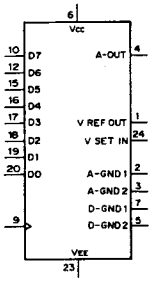

K23043 (SONY)
MOS SYNCHRONOUS 10-BIT BINARY COUNTER
– TOP VIEW –

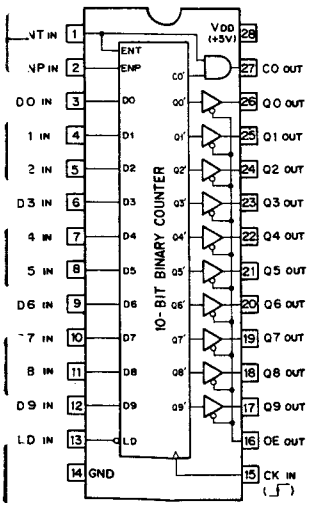

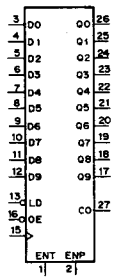

ENT	ENP	LD	FUNCTION
1	1	1	COUNT
0	X	1	NO COUNT
X	0	1	NO COUNT
X	X	0	LOAD

OE	Q0 to Q9 OUTPUT
0	Q0' to Q9'
1	HI-IMPEDANCE

0; LOW LEVEL
1; HIGH LEVEL
X; DON'T CARE

Q0 to Q9; OUTPUTS
Q0'to Q9'; COUNTER OUTPUTS
D0 to D9; INPUTS DATA
CO; CARRY OUTPUT
OE; OUTPUT ENABLE
LD; INPUT DATA LOAD
ENT; CLOCK & CARRY OUT ENABLE
ENP; CLOCK ENABLE
CK; CLOCK INPUT

CARRY OUTPUT "CO"

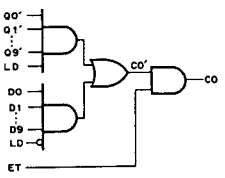

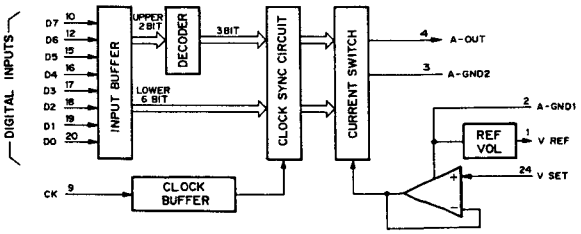

CXA1260Q-Z (SONY) FLAT PACKAGE

8-BIT 35MHz 3-CHANNEL D/A CONVERTER
– TOP VIEW –

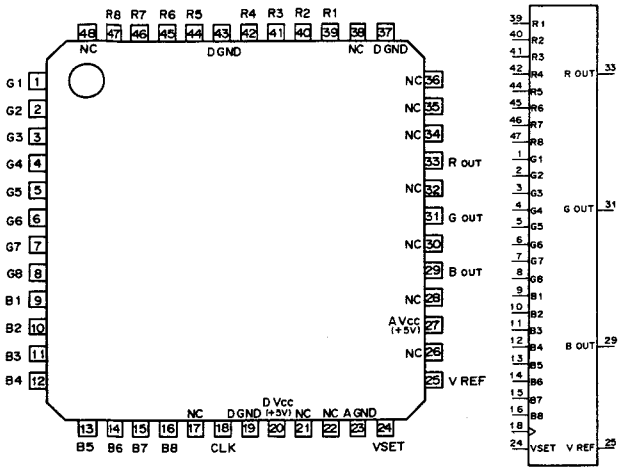

B1-B8 ; B CHANNEL DIGITAL INPUTS (LSB TO MSB)
B OUT ; B CHANNEL ANALOG OUTPUT
CLK ; D/A CONVERSION CLOCK
G1-G8 ; G CHANNEL DIGITAL INPUTS (LSB TO MSB)
G OUT ; G CHANNEL ANALOG OUTPUT
R1-R8 ; R CHANNEL DIGITAL INPUTS (LSB TO MSB)
R OUT ; R CHANNEL ANALOG OUTPUT
VREF ; REFERENCE VOLTAGE OUTPUT, +1.2V TYP.
VSET ; BIAS INPUT (VSET = +0.87V ; D/A OUT = 1Vp-p)

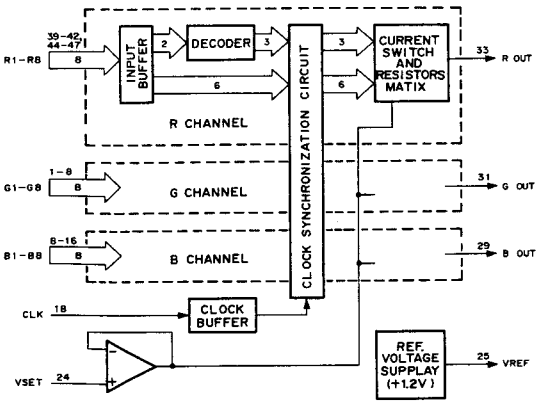

CXD1175AM (SONY) FLAT PACKAGE

C-MOS 8-BIT 20MSPS VIDEO A/D CONVERTER
– TOP VIEW –

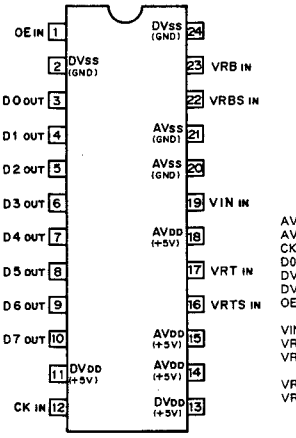

AV_{DD} : ANALOG POWER SUPPLY
AV_{SS} : ANALOG GROUND
CK : CLOCK INPUT
D0 – 7 : DIGITAL DATA OUTPUTS (LSB to MSB)
DV_{DD} : DIGITAL POWER SUPPLY
DV_{SS} : DIGITAL GROUND
OE : OUTPUT ENABLE
(OE = HIGH ; HIGH IMPEDANCE)
VIN : ANALOG VOLTAGE INPUT
VRB : BOTTOM REFERENCE VOLTAGE INPUT
VRBS : AS SHORT-CIRCUIT AT VRB, GENERATES + 0.6V
VRT : TOP REFERENCE VOLTAGE INPUT
VRTS : AS SHORT-CIRCUIT AT VRT, GENERATES + 2.6V

STEP	INPUT SIGNAL VOLTAGE	DATA OUTPUTS							
		D7	D6	D5	D4	D3	D2	D1	D0
0	0V (VRT)	1	1	1	1	1	1	1	1
1	0.01V	1	1	1	1	1	1	1	0
⋮	⋮	⋮	⋮	⋮	⋮	⋮	⋮	⋮	⋮
127	1.34V	1	0	0	0	0	0	0	0
128	1.35V	0	1	1	1	1	1	1	1
⋮	⋮	⋮	⋮	⋮	⋮	⋮	⋮	⋮	⋮
255	2.7V (VRB)	0	0	0	0	0	0	0	0

0 : LOW LEVEL
1 : HIGH LEVEL

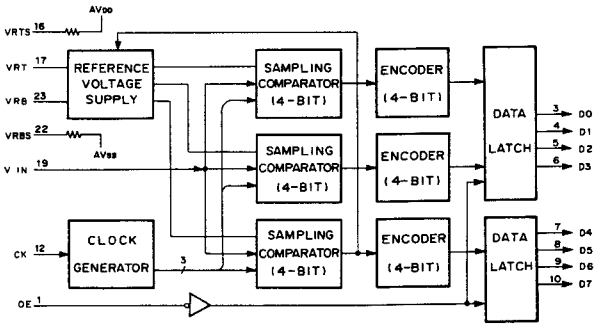

CXD1216M (SONY) FLAT PACKAGE

C-MOS GENLOCK DRIVER

– TOP VIEW –

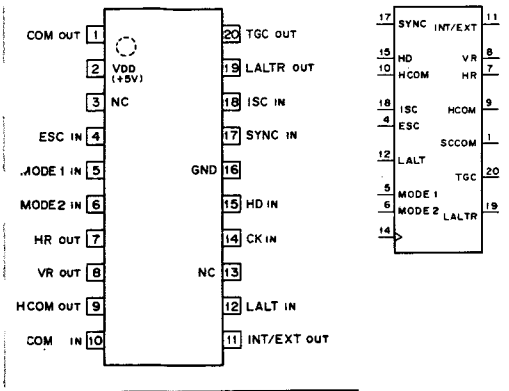

INPUT MODE1	INPUT MODE2	MODE	SYSTEM
0	0	M1	PAL-VBS
1	0	M2	PALM-VBS
0	1	M3	PAL,SECAM-VS/SC/LALT
1	1	M4	NTSC-VBS,NTSC-VS/SC PALM-VS/SC/LALT

0 ; LOW LEVEL
1 ; HIGH LEVEL

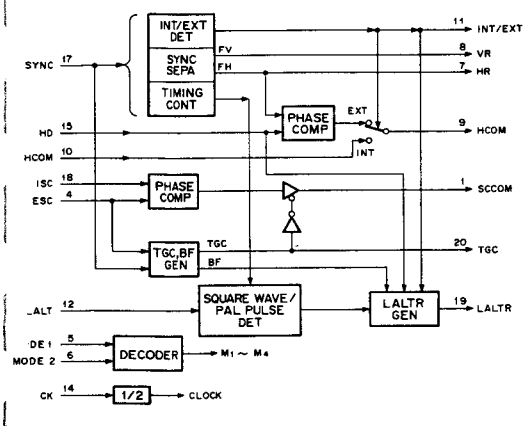

INPUT

:	4fsc CLOCK INPUT
SC	; SC/COLOR BURST
HCOM	; PHASE COMPARATE FROM CXD1217
HD	; H DRIVE FROM CXD1217
ISC	; SUBCARRIER FROM CXD1217
LT	; LALT FROM REFERENCE SIGNAL GENERATOR
DE1,2	; SYSTEM SELECT
NC	; SYNC FROM REFERENCE SIGNAL GENERATOR

OUTPUT

HCOM	; PHASE COMPARATOR HR WITH HD
HR	; fH OF SYNC SEPARATE
INT/EXT	; INTERNAL/EXTERNAL SPECIFIED
LTR	; LINE CHANGE RESET
COM	; PHASE COMPARATOR ESC WITH ISC
SC	; TRISTATE CONTROL
R	; fV OF SYNC SEPARATE

CXD8031Q (SONY) FLAT PACKAGE

C-MOS GATE ARRAY

– TOP VIEW –

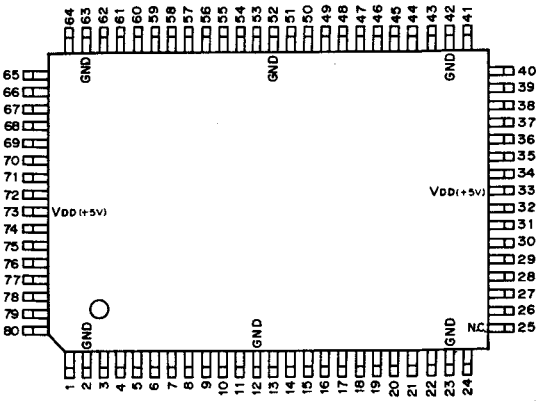

PIN NO.	I/O	SYMBOL	PIN NO.	I/O	SYMBOL	PIN NO.	I/O	SYMBOL	PIN NO.	I/O	SYMBOL
1	O	Q2	21	O	Q11	41	O	Q18	61	I	OE
2	–	GND	22	O	Q12	42	–	GND	62	I	CLK
3	O	Q3	23	–	GND	43	O	Q19	63	–	GND
4	O	Q4	24	I	CLR	44	O	Q20	64	O	E2
5	I	D4	25	–	N.C.	45	I	D20	65	O	E3
6	I	D5	26	O	Q13	46	I	D21	66	O	E4
7	I	D6	27	O	Q14	47	I	D22	67	I	C4
8	I	D7	28	O	Q15	48	I	D23	68	I	C5
9	O	Q5	29	I	D13	49	O	Q21	69	I	CE
10	O	Q6	30	I	D14	50	O	Q22	70	I	A0
11	O	Q7	31	I	D15	51	O	Q23	71	I	A1
12	–	GND	32	I	DS1	52	–	GND	72	I	WE
13	O	Q8	33	–	VDD (+5V)	53	I	MODE	73	–	VDD (+5V)
14	O	Q9	34	I	DS2	54	I	TEST	74	I	DS0
15	I	D8	35	I	D16	55	I	C0	75	I	D0
16	I	D9	36	I	D17	56	O	E0	76	I	D1
17	I	D10	37	I	D18	57	I	C1	77	I	D2
18	I	D11	38	I	D19	58	I	C2	78	I	D3
19	I	D12	39	O	Q16	59	O	E1	79	O	Q0
20	O	Q10	40	O	Q17	60	I	C3	80	O	Q1

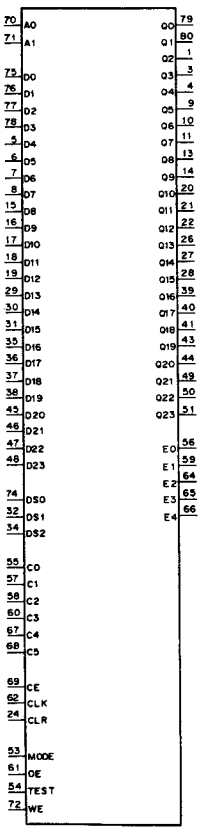

A0, 1	; ADDRESS
C0 – C5	; COMMAND
CE	; COMMAND ENABLE
CLK	; CLOCK
CLR	; CLEAR
D0 – D23	; DATA INPUT
DS0 – DS2	; DATA STROBE
E0 – E4	; EXPONENT OUTPUT
MODE	; OUTPUT MODE
OE	; OUTPUT ENABLE
Q0 – Q23	; DATA OUTPUT
TEST	; TEST PIN
WE	; WRITE ENABLE

CXD1217M (SONY) FLAT PACKAGE

C-MOS SYNC GENERATOR

– TOP VIEW –

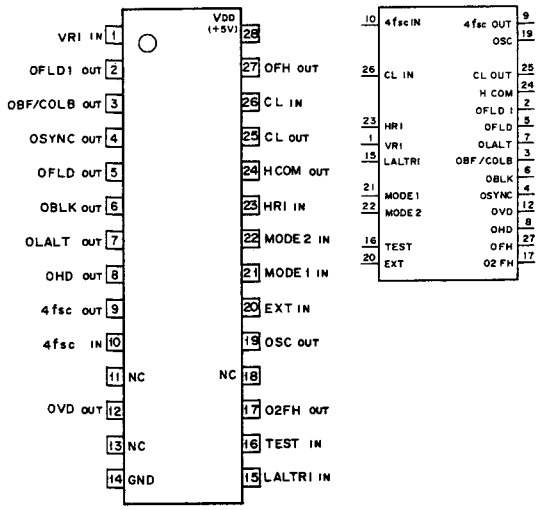

SYSTEM	4fsc	CLOCK
NTSC	910fH	910fH
PAL	1135fH+25	908fH
PALM	909fH	910fH
SECAM	—	908fH

INPUT		SYSTEM
MODE1	MODE2	
0	0	NTSC
0	1	SECAM
1	0	PALM
1	1	PAL

0 ; LOW LEVEL
1 ; HIGH LEVEL

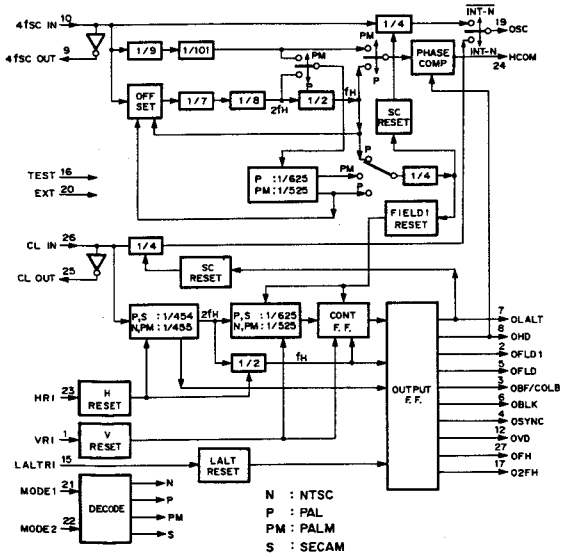

N : NTSC
P : PAL
PM : PALM
S : SECAM

INPUT

4fSC IN	; 4fSC INPUT
CL IN	; CLOCK INPUT
EXT	; SYNC MODE SELECT (L ; INTERNAL/H ; EXTERNAL)
HRI	; H RESET
LALTRI	; LINE CHANGE RESET
MODE 1,2	; SYSTEM SELECT
VRI	; V RESET

OUT PUT

4fSC OUT	; 4fSC OUTPUT
CL OUT	; CLOCK OUTPUT
HCOM	; PHASE COMPARATOR
02fH	; 2fH OUTPUT
OBF/COLB	; BURST FLAG/COLOR BLANKING
OBLK	; COMPOSITE BLANKING
OFH	; H FREQUENCE
OFLD	; EVEN, ODD
OFLD1	; FIELD1
OHD	; H DRIVE
OLALT	; LINE CHANGE
OSC	; SUBCARRIER
OSYNC	; COMPOSITE SYNC
OVD	; V DRIVE

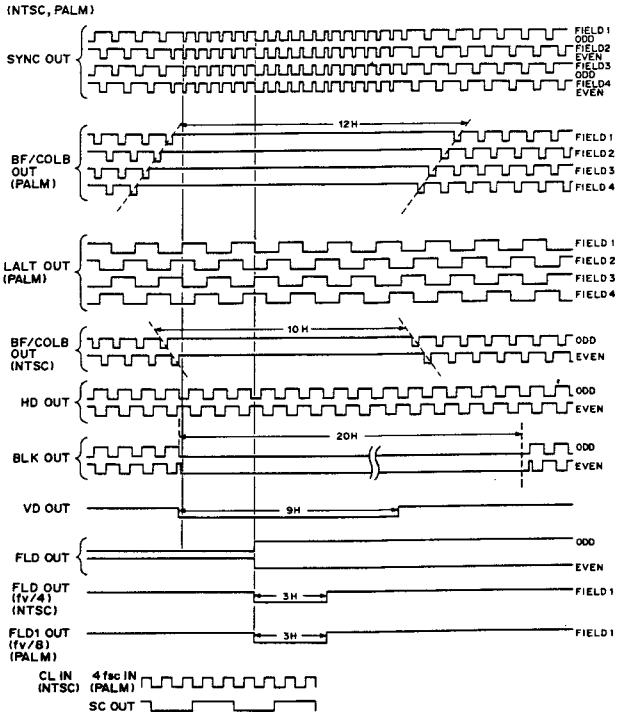

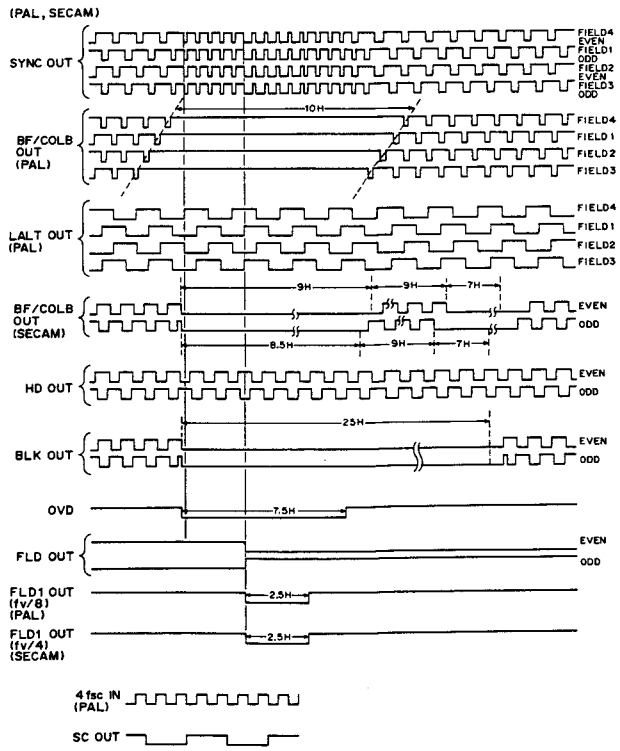

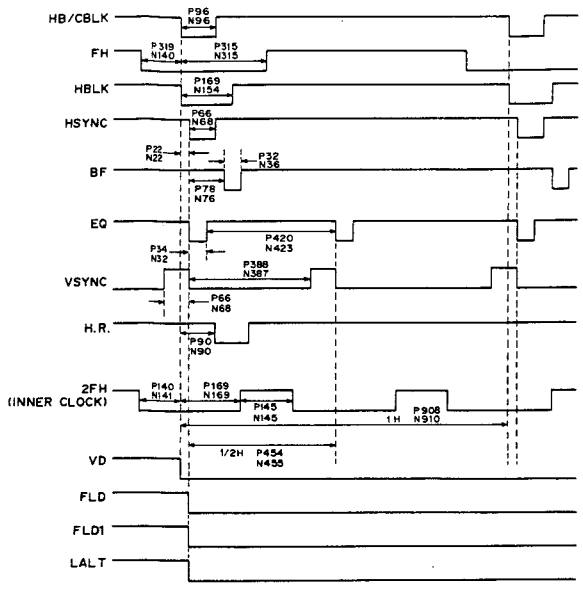

P: PAL, SECAM
N: NTSC, PALM

CXD8033Q (SONY) FLAT PACKAGE

C-MOS GATE ARRAY

– TOP VIEW –

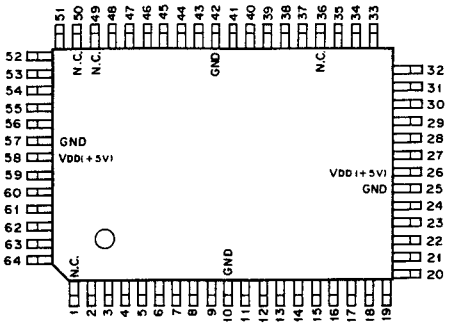

PIN NO.	I/O	SYMBOL	PIN NO.	I/O	SYMBOL	PIN NO.	I/O	SYMBOL
1	–	N.C.	23	I	A03	45	O	Y09
2	O	X05	24	I	XCK	46	O	Y08
3	O	X04	25	–	GND	47	O	Y07
4	O	X03	26	–	VDD(+5V)	48	O	Y06
5	O	X02	27	I	LDS	49	–	N.C.
6	O	X01	28	I	UDS	50	–	N.C.
7	O	X00	29	I	WE0	51	O	Y05
8	I	D00	30	I	WE1	52	O	Y04
9	I	D01	31	O	AR0	53	O	Y03
10	–	GND	32	O	AR1	54	O	Y02
11	I	D02	33	O	LN0	55	O	Y01
12	I	D03	34	O	LN1	56	O	Y00
13	I	D04	35	O	WKEY	57	–	GND
14	I	D05	36	–	N.C.	58	–	VDD(+5V)
15	I	D06	37	I	XLD	59	O	X11
16	I	D07	38	I	YLD	60	O	X10
17	I	D08	39	I	YMD	61	O	X09
18	I	D09	40	I	YCK	62	O	X08
19	I	D10	41	I	TEST	63	O	X07
20	I	D11	42	–	GND	64	O	X06
21	I	A01	43	O	Y11			
22	I	A02	44	O	Y10			

XA1451M (SONY)

WIDEBAND VIDEO SWITCH

– TOP VIEW –

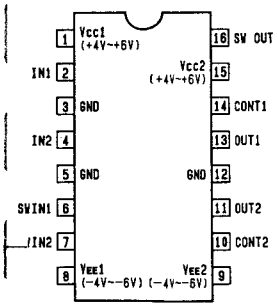

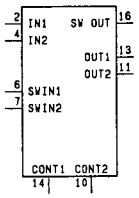

INPUT
CONT1, 2 ; POWER SAVE CONTROL PIN OF DRV.1 AND DRV.2
INT1, 2 ; 1/2-CHANNEL INPUT PIN
SWIN1, 2 ; IN1/IN2 PINS SWITCH CONTROL PIN

OUTPUT
OUT1, 2 ; OUTPUT PIN OF DRV.1/2
SWOUT ; OUTPUTS IN1 PIN OR IN2 PIN WHICH HAS BEEN SELECTED BY SWITCH.

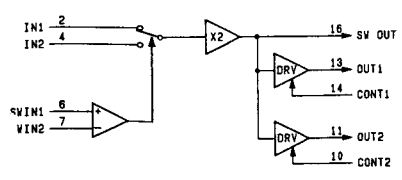

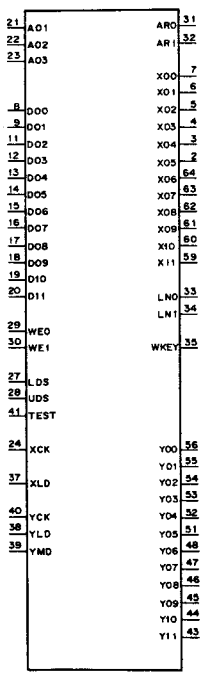

A01 – A03 : ADDRESS 01 – 03
AR0, 1 : VALID AREA 0, 1
D00 – D11 : DATA INPUT 00 – 11
LDS : LOWER DATA STROBE
LN0, 1 : VALID LINE 0, 1
UDS : UPPER DATA STROBE
TEST : TEST PIN
WE0, 1 : WRITE ENABLE 0, 1
X00 – X11 : X CONVERTER OUTPUT
XCK : X CLOCK
WKEY : WIPE KEY
XLD : X LOAD
Y00 – Y11 : Y COUNTER OUTPUT 00 – 11
YCK : Y CLOCK
YLD : Y LOAD
YMD : Y MODE

CXD2105AQ (SONY) FLAT PACKAGE

C-MOS DIGITAL COMB FILTER FOR VTR'S
– TOP VIEW –

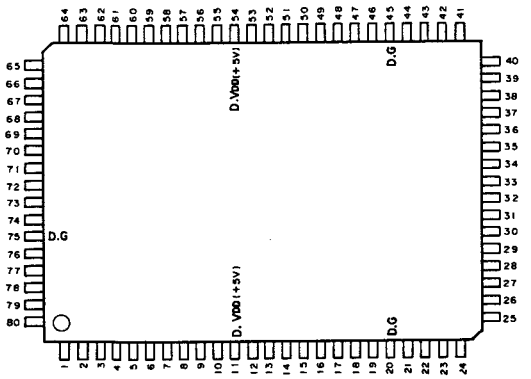

PIN No.	I/O	SIGNAL	PIN No.	I/O	SIGNAL	PIN No.	I/O	SIGNAL	PIN No.	I/O	SIGNAL
1	I	BPV	21	I	IGD0	41	I	IGW2	61	I	IGY1
2	O	OPER	22	I	IGC1	42	I	IGW3	62	I	IGY2
3	–	A.VDD P	23	I	IGIH	43	I	IGW4	63	I	IGH1
4	I	IGPE	24	I	IGRP	44	I	IGW5	64	O	ORZH
5	I	IGPC	25	I	IGOC	45	–	D.G	65	O	OR00
6	–	A.G P	26	–	A.VDD C	46	I/O	BMY1	66	I	IGRC
7	I	IGZV	27	O	OCIO	47	I/O	BMY2	67	I	IYC8
8	O	OZVD	28	O	OCVG	48	I/O	BMY3	68	I	IYC7
9	O	OZPS	29	–	ICVR	49	I/O	BMY4	69	I	IYC6
10	I	IGZP	30	O	OCIR	50	I/O	BMY5	70	I	IYC5
11	–	D.VDD	31	–	A.G C	51	I/O	BMY6	71	I	IYC4
12	I/O	BMC1	32	O	OCVB	52	I/O	BMY7	72	I	IYC3
13	I/O	BMC2	33	O	OYVB	53	I/O	BMY8	73	I	IYC2
14	I/O	BMC3	34	–	A.G Y	54	–	D.VDD	74	I	IYC1
15	I/O	BMC4	35	O	OYIR	55	I	IGAC	75	–	D.G
16	I/O	BMC5	36	–	IYVR	56	I	IGL3	76	O	OADC
17	I/O	BMC6	37	O	OYVG	57	I	IGL2	77	I	IGNP
18	I/O	BMC7	38	O	OYIO	58	I	IGL1	78	I	IGBE
19	I/O	BMC8	39	–	A.VDD Y	59	I/O	BASO	79	I	IGPF
20	–	D.G	40	I	IGW1	60	I	IGC2	80	I	IGCK

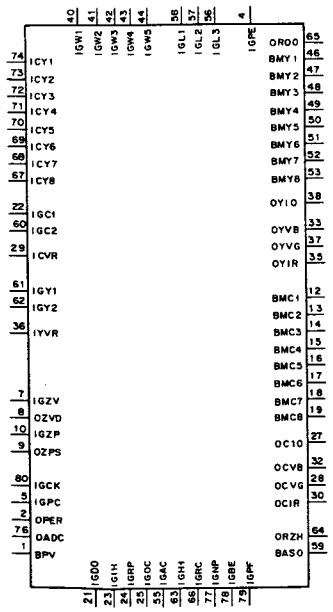

INPUT

BPV	; EXT/INT CLOCK SELECT
ICVR	; ESTABLISHES MAXIMUM AMPLITUDE VALUE FOR OCIO (PIN 27)
IGAC	; V CORRELATION CIRCUIT ON/OFF
IGBE	; SINGLE WAVE DETECTION ON/OFF (Y/C SEPARATION MODE)
IGC1	; V CORRELATION CIRCUIT SELECT
IGC2	; CHROMA FLAT SECTION HORIZONTAL FILTER SELECT (Y/C SEPARATION MODE)
IGCK	; EXTERNAL CLOCK
IGD0	; DROPOUT CORRECTION
IGH1	; FLAT SECTION HORIZONTAL FILTER SELECT (Y/C SEPARATION MODE)
IGIH	; SLEW MODE SET
IGL1 – IGL3	; LIMITER LEVEL ADJUST FOR Y SIGNAL COMB FILTER
IGNP	; NTSC/PAL FORMAT SELECT
IGOC	; OUTPUT ENABLE
IGPC	; VCO CONTROL
IGPE	; TEST
IGPF	; PLL SUBCARRIER
IGRC	; DELAY LINE LENGTH ADJUST
IGRP	; Y/C SEPARATION AND PLAYBACK MODE SELECT
IGW1 – IGW5	; Y COMB FILTER DEPTH ADJUST
IGY1, IGY2	; EDGE SECTION HORIZONTAL FILTER SELECT (Y/C SEPARATION MODE)
IGZP	; 1-BIT DELAY CIRCUIT
IGZV	; VCR HEAD SWITCHING
IYC1 – IYC8	; VIDEO SIGNAL
IYVR	; ESTABLISHES MAXIMUM AMPLITUDE VALUE FOR OYIO (PIN 38)

OUTPUT

OADC	; CLOCK
OCIO	; CHROMA ANALOG SIGNAL
OCIR	; CONNECT A RESISTOR 16x LARGE THAN THE RESISTOR AT OCIO (PIN 27)
OCVB	; CONNECT TO DIGITAL GND WHICH HAS A CAPACITANCE OF UP TO 0.1 µF
OCVG	; CONNECT TO AN ANALOG POWER SUPPLY WHICH HAS A CAPACITANCE OF UP TO 0.1 µF
OPER	; PLL ERROR
OR00	; "0" IS DETECTED AT ALL INPUTS
ORZH	; 1-BIT DELAY CIRCUIT
OYIO	; Y ANALOG SIGNAL
OYIR	; CONNECT A RESISTOR 16x LARGE THAN THE RESISTOR AT OYIO (PIN 38)
OYVB	; CONNECT TO DIGITAL GND WHICH HAS A CAPACITANCE OF UP TO 0.1 µF
OYVG	; CONNECT TO AN ANALOG POWER SUPPLY WHICH HAS A CAPACITANCE OF UP TO 0.1 µF
OZPS	; 1-BIT DELAY CIRCUIT
OZVD	; VSYNC PERIOD MASK

INPUT/OUTPUT

BASO	; EDGE DETECTION LEVEL SELECT (Y/C SEPARATION MODE)
BMC1 – BMC8	; CHROMA DIGITAL SIGNAL
BMY1 – BMY8	; Y DIGITAL SIGNAL

OTHER

A.G C	; ANALOG GND FOR CHROMA D/A
A.G P	; ANALOG GND FOR VCO
A.G Y	; ANALOG GND FOR Y D/A
A.VDD C	; ANALOG POWER SUPPLY FOR CHROMA D/A
A.VDD P	; ANALOG POWER SUPPLY FOR VCO
A.VDD Y	; ANALOG POWER SUPPLY FOR Y D/A
D.G	; DIGITAL GND
D.VDD	; POWER SUPPLY FOR DIGITAL

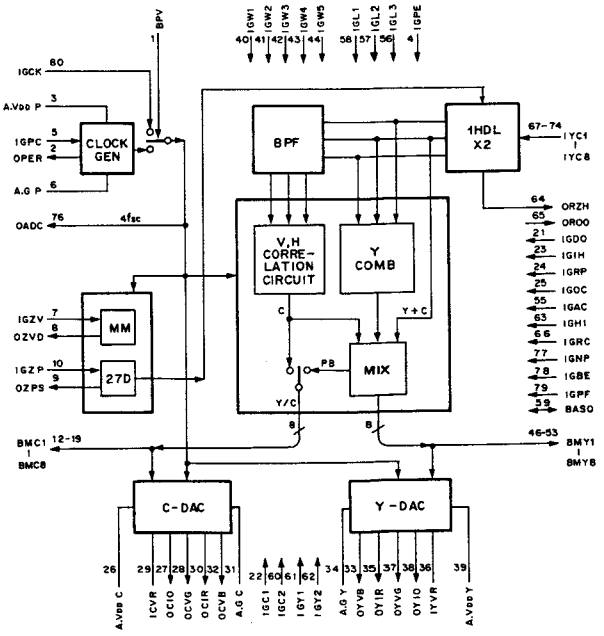

:D8054 (SONY)

C-MOS 13-BIT VARIABLE DELAY LINE
– TOP VIEW –

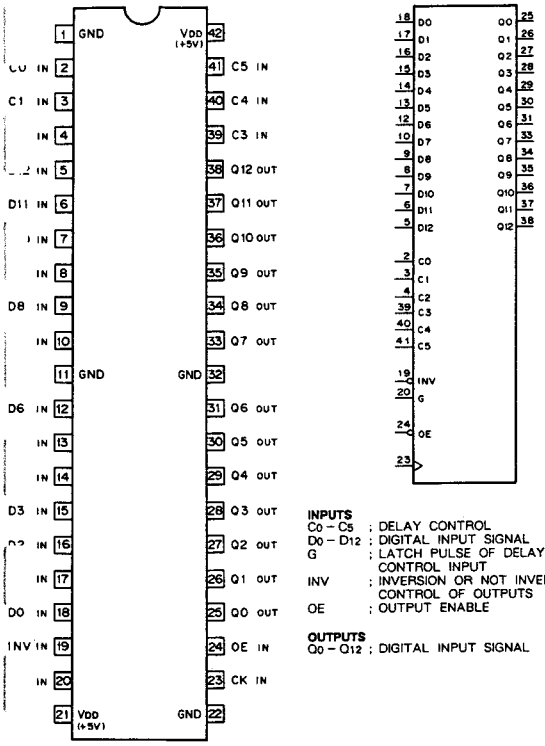

INPUTS
C0 – C5 ; DELAY CONTROL
D0 – D12 ; DIGITAL INPUT SIGNAL
G ; LATCH PULSE OF DELAY CONTROL INPUT
INV ; INVERSION OR NOT INVERSION CONTROL OF OUTPUTS
OE ; OUTPUT ENABLE

OUTPUTS
Q0 – Q12 ; DIGITAL INPUT SIGNAL

AY CONTROL

C5	C4	C3	C2	C1	C0	DELAY (CLOCK)
0	0	0	0	0	0	2
0	0	0	0	0	1	3
0	0	0	0	1	0	4
0	0	0	0	1	1	5
⋮	⋮	⋮	⋮	⋮	⋮	⋮
1	1	1	1	0	0	62
1	1	1	1	0	1	63
1	1	1	1	1	0	64
1	1	1	1	1	1	65

LOW LEVEL
HIGH LEVEL

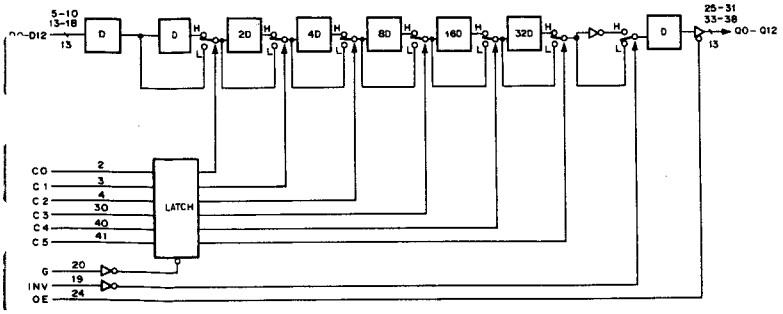

CXD8264Q (SONY)

C-MOS CONTROLLED TO ADDRESS ARITHMETIC
– TOP VIEW –

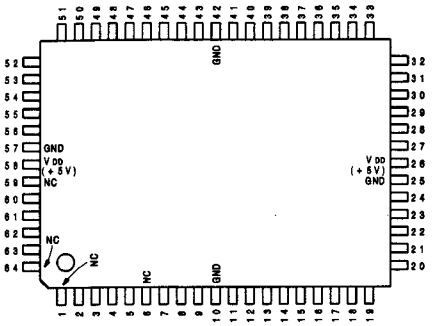

(VDD = +5V)

PIN No.	I/O	SIGNAL	PIN No.	I/O	SIGNAL	PIN No.	I/O	SIGANL	PIN No.	I/O	SIGNAL
1	–	NC	17	I	MD3	33	I	MD11	49	I	S0
2	I	AR0	18	I	MD4	34	I	MD12	50	I	S1
3	I	AR1	19	I	MD5	35	I	MD13	51	I	S2
4	I	LN0	20	I	MD6	36	I	MD14	52	I	S3
5	I	LN1	21	O	MA6	37	I	MD15	53	I	S4
6	–	NC	22	O	MA7	38	O	C0	54	I	S5
7	O	MA0	23	O	MA8	39	O	C1	55	I	S6
8	O	MA1	24	I	OE	40	O	C2	56	I	CK
9	O	MA2	25	–	GND	41	O	C3	57	–	GND
10	–	GND	26	–	VDD	42	–	GND	58	–	VDD
11	O	MA3	27	O	MA9	43	O	C4	59	–	NC
12	O	MA4	28	O	MA10	44	O	C5	60	I	BS
13	O	MA5	29	I	MD7	45	O	C6	61	I	B0
14	I	MD0	30	I	MD8	46	O	C7	62	I	B1
15	I	MD1	31	I	MD9	47	O	CE	63	I	B2
16	I	MD2	32	I	MD10	48	I	SS	64	–	NC

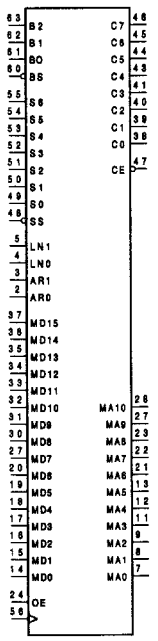

INPUT
AR0,AR1,LN0,LN1;
ARITHMETIC AREA SIGNAL PORT
B0-B2 ; ADDRESS BANK REGISTER DATA PORT
BS ; ADDRESS BANK STROBE
CK ; CLOCK
MD0-MD15 ; MEMORY DATA PORT
OE ; OUTPUT ENABLE FOR MEMORY ADDRESS
S0-S6 ; START ADDRESS REGISTER
SS ; WRITE STROBE FOR START ADDRESS REGISTER

OUTPUT
C0-C7 ; CONTROL PORT FOR ADDRESS ARITHMETIC IC
CE ; CHIP ENABLE
MA0-MA10 ; MEMORY ADDRESS PORT

CXD8070K (SONY)

C-MOS DIGITAL VIDEO LPF
– TOP VIEW –

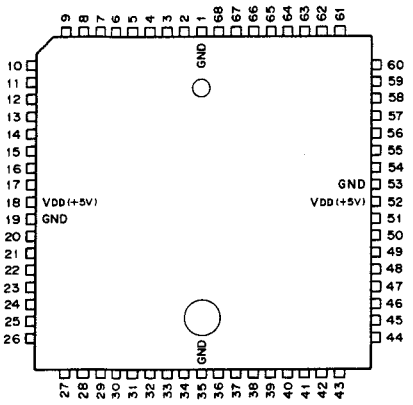

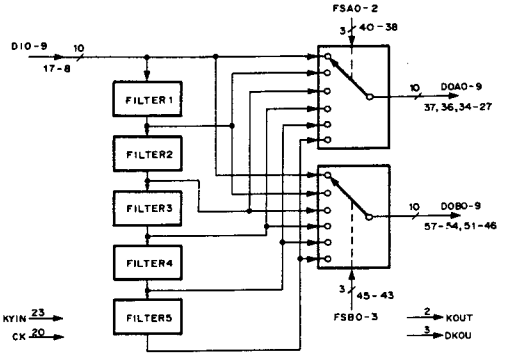

PIN No.	I/O	SIGNAL	PIN No.	I/O	SIGNAL	PIN No.	I/O	SIGNAL	PIN No.	I/O	SIGNAL
1	–	GND	18	–	VDD	35	–	GND	52	–	VDD
2	O	KOUT	19	–	GND	36	O	DOA1	53	–	GND
3	O	DKOU	20	I	CK	37	O	DOA0	54	O	DOB3
4	–	NC	21	–	NC	38	I	FSA2	55	O	DOB2
5	–	NC	22	–	NC	39	I	FSA1	56	O	DOB1
6	–	NC	23	I	KYIN	40	I	FSA0	57	O	DOB0
7	–	NC	24	I	BYS2	41	I	OEA	58	I	O2SB
8	I	DIN9	25	I	BYS1	42	I	OEB	59	I	I2SB
9	I	DIN8	26	I	BYS0	43	I	FSB2	60	–	NC
10	I	DIN7	27	O	DOA9	44	I	FSB1	61	–	NC
11	I	DIN6	28	O	DOA8	45	I	FSB0	62	–	NC
12	I	DIN5	29	O	DOA7	46	O	DOB9	63	–	NC
13	I	DIN4	30	O	DOA6	47	O	DOB8	64	–	NC
14	I	DIN3	31	O	DOA5	48	O	DOB7	65	–	NC
15	I	DIN2	32	O	DOA4	49	O	DOB6	66	–	NC
16	I	DIN1	33	O	DOA3	50	O	DOB5	67	–	NC
17	I	DIN0	34	O	DOA2	51	O	DOB4	68	–	NC

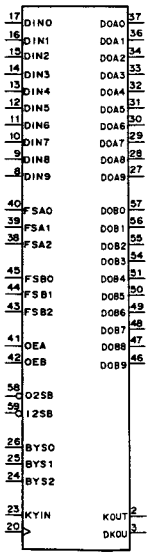

INPUT
BYS0 – 2 ; MODE SELECT
CK ; CLOCK INPUT
DIN0 – 9 ; DATA INPUT
FSA0 – 2 ; DATA OUTPUT A SELECT
FSB0 – 2 ; DATA OUTPUT B SELECT
I2SB ; DATA INPUT MSB INVERT
KYIN ; KEY SIGNAL INPUT
O2SB ; DATA OUTPUT MSB INVERT
OEA ; DATA OUTPUT A ENABLE
OEB ; DATA OUTPUT B ENABLE

OUTPUT
DKOU ; DELAYED KEY SIGNAL OUTPUT
DOA0 – 9; DATA OUTPUT A
DOB0 – 9; DATA OUTPUT B
KOUT ; KEY SIGNAL OUTPUT

CXK1203Q (SONY)

C-MOS DIGITAL LINE MEMORY
– TOP VIEW –

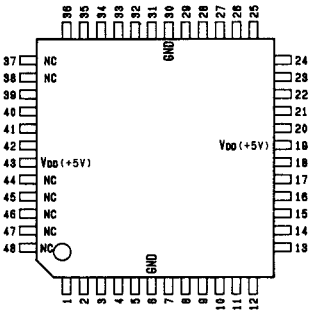

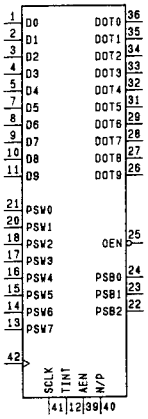

(VDD = + 5V)

PIN No.	I/O	SIGNAL	PIN No.	I/O	SIGANL	PIN No.	I/O	SIGNAL	PIN No.	I/O	SIGNAL
1	I	D0	13	I	PSW7	25	I	OEN	37	–	N.C
2	I	D1	14	I	PSW6	26	O	DOT9	38	–	N.C
3	I	D2	15	I	PSW5	27	O	DOT8	39	I	AEN
4	I	D3	16	I	PSW4	28	O	DOT7	40	I	N/P
5	I	D4	17	I	PSW3	29	O	DOT6	41	I	SCLK
6	–	GND	18	I	PSW2	30	–	GND	42	I	CLK
7	I	D5	19	–	VDD	31	O	DOT5	43	–	VDD
8	I	D6	20	I	PSW1	32	O	DOT4	44	–	N.C
9	I	D7	21	I	PSW0	33	O	DOT3	45	–	N.C
10	I	D8	22	I	PSB2	34	O	DOT2	46	–	N.C
11	I	D9	23	I	PSB1	35	O	DOT1	47	–	N.C
12	I	TINT	24	I	PSB0	36	O	DOT0	48	–	N.C

AEN ;LINE MEMORY SELECT
CLK ;CLOCK
DIN0–DIN9 ;VIDEO DATA INPUT
DOT0–DOT9 ;VIDEO DATA OUTPUT
N/P ;NTSC/PAL/SECAM SELECT
OEN ;OUTPUT ENABLE
PSB0–PSB2 ;DELAY STEP SELECT(1 BITxN)
PSW0–PSW7 ;DELAY STEP SELECT(8 BITxN)
SCLK ;CLOCK EDGE SELECT
TINT ;TEST

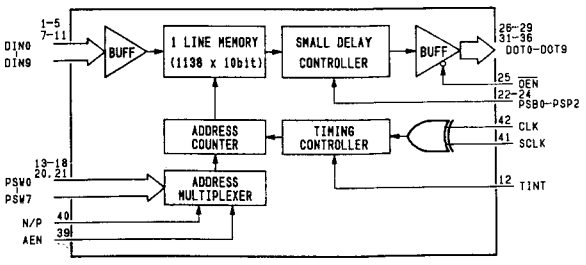

:D8262Q (SONY)
CMOS ADDRESS ARITHMETIC
– TOP VIEW –

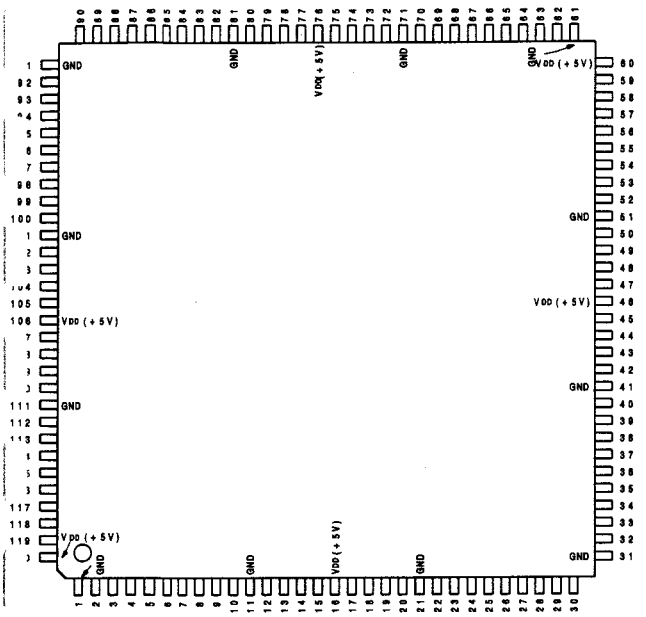

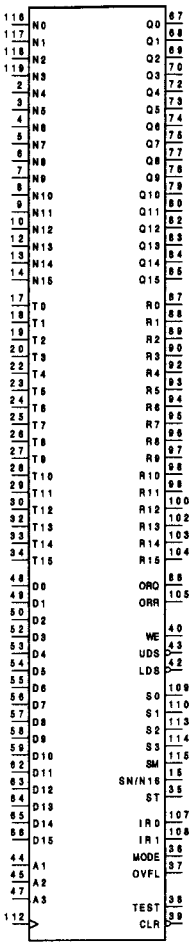

INPUT

A1–A3 ; INTERNAL REGISTER ADDRESS
CK ; CLOCK
CLR ; INTERNAL REGISTER CLEAR
D0–D15 ; INTERNAL REGISTER DATA
IR0 ; ORQ·ORR OUTPUT CONTROL AT PACE-PECTIVE MODE
IR1 ; ORQ·ORR OUTPUT CONTROL AT TURN OVER PAGE MODE
LDS ; LOWER DATA STROBE
MODE ; MODE SELECT
(0:PACE-PECTIVE MODE, 1:TURN OVER PAGE MODE)
N0–N15 ; N DATA PORT
OVFL ; OVERFLOW
S0–S3 ; SHIFT NUMERICAL PORT
SM ; SHIFT MODE SELECT
(0:RIGHT SHIFT MODE, 1:LEFT SHIFT MODE)
SN/N16 ; PACE-PECTIVE MODE: N DATA CODE
TURN OVER PAGE MODE: N DATA (MSB)
ST ; PACE-PECTIVE MODE: T DATA CODE
TURN OVER PAGE MODE: DON'T CARE
T0–T15 ; T DATA PORT
TEST ; TEST TERMINAL
UDS ; UPPER DATA STROBE
WE ; WRITE ENABLE

OUTPUT

ORQ ; Q DATA CLIPPING SIGNAL
ORR ; R DATA CLIPPING SIGNAL
Q0–Q15 ; Q DATA PORT
R0–R15 ; R DATA PORT

(VDD = +5V)

N.C.	I/O	SIGNAL	PIN No.	I/O	SIGNAL	PIN No.	I/O	SIGNAL	PIN No.	I/O	SIGNAL
1	–	GND	31	–	GND	61	–	GND	91	–	GND
2	I	N4	32	I	T13	62	I	D11	92	O	R4
[illegible]	I	N5	33	I	T14	63	I	D12	93	O	R5
[illegible]	I	N6	34	I	T15	64	I	D13	94	O	R6
[illegible]	I	N7	35	I	ST	65	I	D14	95	O	R7
[illegible]	I	N8	36	I	MODE	66	I	D15	96	O	R8
7	I	N9	37	I	OVFL	67	O	Q0	97	O	R9
8	I	N10	38	I	TEST	68	O	Q1	98	O	R10
9	I	N11	39	I	CLR	69	O	Q2	99	O	R11
0	I	N12	40	I	WE	70	O	Q3	100	O	R12
1	–	GND	41	–	GND	71	–	GND	101	–	GND
2	I	N13	42	I	LDS	72	O	Q4	102	O	R13
13	I	N14	43	I	UDS	73	O	Q5	103	O	R14
14	I	N15	44	I	A1	74	O	Q6	104	O	R15
15	I	SN/N16	45	I	A2	75	O	Q7	105	O	ORR
6	–	VDD	46	–	VDD	76	–	VDD	106	–	VDD
7	I	T0	47	I	A3	77	O	Q8	107	I	IR0
8	I	T1	48	I	D0	78	O	Q9	108	I	IR1
9	I	T2	49	I	D1	79	O	Q10	109	I	S0
20	I	T3	50	I	D2	80	O	Q11	110	I	S1
21	–	GND	51	–	GND	81	–	GND	111	–	GND
22	I	T4	52	I	D3	82	O	Q12	112	I	CK
3	I	T5	53	I	D4	83	O	Q13	113	I	S2
4	I	T6	54	I	D5	84	O	Q14	114	I	S3
5	I	T7	55	I	D6	85	O	Q15	115	I	SM
26	I	T8	56	I	D7	86	O	ORQ	116	I	N0
27	I	T9	57	I	D8	87	O	R0	117	I	N1
28	I	T10	58	I	D9	88	O	R1	118	I	N2
9	I	T11	59	I	D10	89	O	R2	119	I	N3
0	I	T12	60	–	VDD	90	O	R3	120	–	VDD

CXD8263Q (SONY)

C-MOS VARIABLE LOW PASS FILTER

– TOP VIEW –

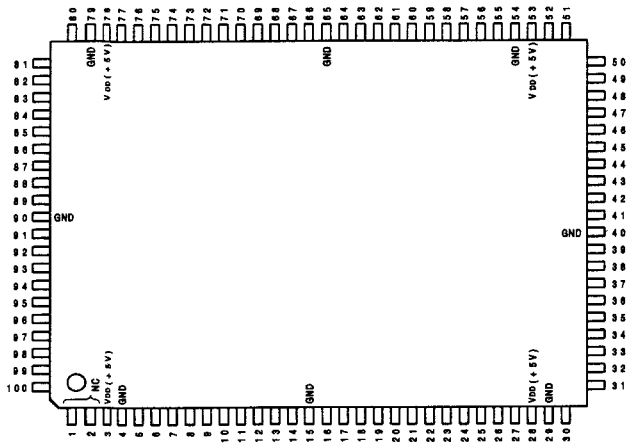

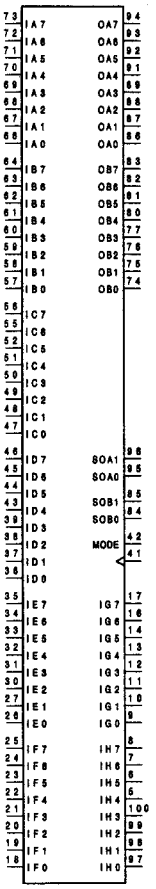

INPUT

CK ; CLOCK
IA0–IA7 ; A DATA PORT
IB0–IB7 ; B DATA PORT
IC0–IC7 ; C DATA PORT
ID0–ID7 ; D DATA PORT
IE0–IE7 ; E DATA PORT
IF0–IF7 ; F DATA PORT
IG0–IG7 ; G DATA PORT
IH0–IH7 ; H DATA PORT
MODE ; MODE SELECT (0:COMPLEMENT 2 MODE, 1:INTEGER MODE)
SOA0,SOA1; OA0–OA7 OUTPUT DATA SELECT
SOB0,SOB1; OB0–OB7 OUTPUT DATA SELECT

OUTPUT

OA0–OA7 ; A DATA PORT
OB0–OB7 ; B DATA PORT

(VDD = +5V)

PIN No.	I/O	SIGNAL	PIN No.	I/O	SIGNAL	PIN No.	I/O	SIGNAL	PIN No.	I/O	SIGNAL
1	–	NC	26	I	IE0	51	I	IC4	76	O	OB2
2	–	NC	27	I	IE1	52	I	IC5	77	O	OB3
3	–	VDD	28	–	VDD	53	–	VDD	78	–	VDD
4	–	GND	29	–	GND	54	–	GND	79	–	GND
5	I	IH4	30	I	IE2	55	I	IC6	80	O	OB4
6	I	IH5	31	I	IE3	56	I	IC7	81	O	OB5
7	I	IH6	32	I	IE4	57	I	IB0	82	O	OB6
8	I	IH7	33	I	IE5	58	I	IB1	83	O	OB7
9	I	IG0	34	I	IE6	59	I	IB2	84	I	SOB0
10	I	IG1	35	I	IE7	60	I	IB3	85	I	SOB1
11	I	IG2	36	I	ID0	61	I	IB4	86	O	OA0
12	I	IG3	37	I	ID1	62	I	IB5	87	O	OA1
13	I	IG4	38	I	ID2	63	I	IB6	88	O	OA2
14	I	IG5	39	I	ID3	64	I	IB7	89	O	OA3
15	–	GND	40	–	GND	65	–	GND	90	–	GND
16	I	IG6	41	I	CK	66	I	IA0	91	O	OA4
17	I	IG7	42	I	MODE	67	I	IA1	92	O	OA5
18	I	IF0	43	I	ID4	68	I	IA2	93	O	OA6
19	I	IF1	44	I	ID5	69	I	IA3	94	O	OA7
20	I	IF2	45	I	ID6	70	I	IA4	95	I	SOA0
21	I	IF3	46	I	ID7	71	I	IA5	96	I	SOA1
22	I	IF4	47	I	IC0	72	I	IA6	97	I	IH0
23	I	IF5	48	I	IC1	73	I	IA7	98	I	IH1
24	I	IF6	49	I	IC2	74	O	OB0	99	I	IH2
25	I	IF7	50	I	IC3	75	O	OB1	100	I	IH3

CD8265Q (SONY)
CMOS LINEAR INTERPOLATION ARITHMETIC
– TOP VIEW –

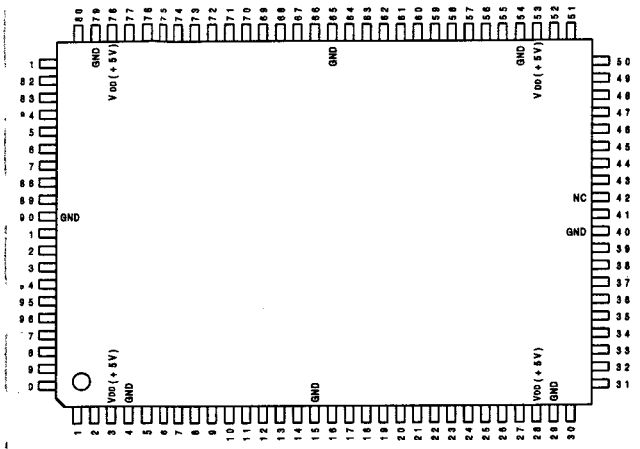

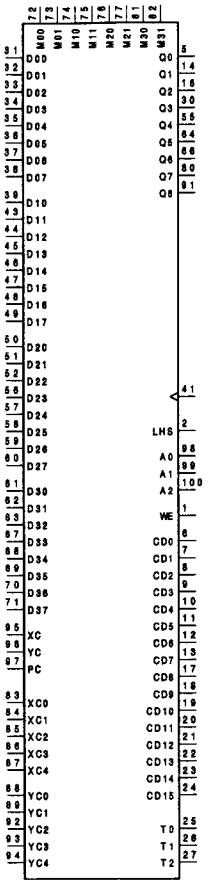

INPUT

A0–A2	; REGISTER SELECT ADDRESS
CD0–CD15	; WRITE DATA TO REGISTER
CK	; SYSTEM CLOCK
D00–D07	; IMAGE DATA (X:EVEN, Y:EVEN)
D10–D17	; IMAGE DATA (X:ODD, Y:EVEN)
D20–D27	; IMAGE DATA (X:EVEN, Y:ODD)
D30–D37	; IMAGE DATA (X:ODD, Y:ODD)
LHS	; REGISTER ASSIGN ADDRESS CHANGE
M00,M01	; CONTROL BIT (X:EVEN, Y:EVEN)
M10,M11	; CONTROL BIT (X:ODD, Y:EVEN)
M20,M21	; CONTROL BIT (X:EVEN, Y:ODD)
M30,M31	; CONTROL BIT (X:ODD, Y:ODD)
T0–T2	; OPERATE MODE SELECT
WE	; WRITE ENABLE FOR REGISTER
XC0–XC4	; X DIRECTION INTERPOLATION DATA
YC0–YC4	; Y DIRECTION INTERPOLATION DATA

OUTPUT

Q0–Q8	; RESULT DATA

(VDD = +5V)

PIN No.	I/O	SIGNAL	PIN No.	I/O	SIGNAL	PIN No.	I/O	SIGNAL	PIN No.	I/O	SIGNAL
	I	WE	26	I	T1	51	I	D21	76	I	M20
	I	LHS	27	I	T2	52	I	D22	77	I	M21
	–	VDD	28	–	VDD	53	–	VDD	78	–	VDD
4	–	GND	29	–	GND	54	–	GND	79	–	GND
5	O	Q0	30	O	Q3	55	O	Q4	80	O	Q7
	I	CD0	31	I	D00	56	I	D23	81	I	M30
	I	CD1	32	I	D01	57	I	D24	82	I	M31
	I	CD2	33	I	D02	58	I	D25	83	I	XC0
	I	CD3	34	I	D03	59	I	D26	84	I	XC1
10	I	CD4	35	I	D04	60	I	D27	85	I	XC2
11	I	CD5	36	I	D05	61	I	D30	86	I	XC3
12	I	CD6	37	I	D06	62	I	D31	87	I	XC4
3	I	CD7	38	I	D07	63	I	D32	88	I	YC0
4	O	Q1	39	I	D10	64	O	Q5	89	I	YC1
5	–	GND	40	–	GND	65	–	GND	90	–	GND
16	O	Q2	41	I	CK	66	O	Q6	91	O	Q8
17	I	CD8	42	–	NC	67	I	D33	92	I	YC2
18	I	CD9	43	I	D11	68	I	D34	93	I	YC3
9	I	CD10	44	I	D12	69	I	D35	94	I	YC4
0	I	CD11	45	I	D13	70	I	D36	95	I	XC
1	I	CD12	46	I	D14	71	I	D37	96	I	YC
2	I	CD13	47	I	D15	72	I	M00	97	I	PC
23	I	CD14	48	I	D16	73	I	M01	98	I	A0
24	I	CD15	49	I	D17	74	I	M10	99	I	A1
25	I	T0	50	I	D20	75	I	M11	100	I	A2

CXD8266Q (SONY)

C-MOS MEMORY ADDRESS BUS CONTROL
– TOP VIEW –

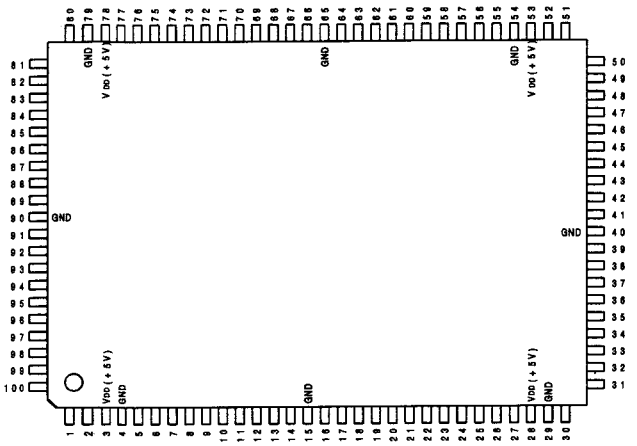

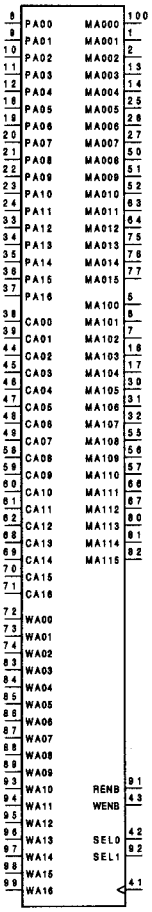

INPUT

CA00–CA16	; READ ADDRESS FROM MEMORY
CK	; SYSTEM CLOCK
PA00–PA16	; READ ADDRESS FROM MEMORY
RENB	; LATCH ENABLE FOR READ SYSTEM
SEL0	; READ/WRITE CHANGE

	MA0	MA1
0	READ	WRITE
1	WRITE	READ

SEL1	; READ ADDRESS SELECT (0:PA MODE, 1:CA MODE)
WA00–WA16	; WRITE ADDRESS TO MEMORY
WENB	; LATCH ENABLE FOR WRITE SYSTEM

OUTPUT

MA000–MA015	; READ/WRITE ADDRESS
MA100–MA115	; READ/WRITE ADDRESS

CONTROL		OUTPUT	
SEL0	SEL1	MA0	MA1
0	0	PA OUT	WA OUT
0	1	CA OUT	WA OUT
1	0	WA OUT	PA OUT
1	1	WA OUT	CA OUT

(VDD = +5V)

PIN No.	I/O	SIGNAL	PIN No.	I/O	SIGNAL	PIN No.	I/O	SIGNAL	PIN No.	I/O	SIGNAL
1	O	MA001	26	O	MA006	51	O	MA009	76	O	MA014
2	O	MA002	27	O	MA007	52	O	MA010	77	O	MA015
3	-	VDD	28	-	VDD	53	-	VDD	78	-	VDD
4	-	GND	29	-	GND	54	-	GND	79	-	GND
5	O	MA100	30	O	MA105	55	O	MA108	80	O	MA113
6	O	MA101	31	O	MA106	56	O	MA109	81	O	MA114
7	O	MA102	32	O	MA107	57	O	MA110	82	O	MA115
8	I	PA00	33	I	PA12	58	I	CA08	83	I	WA03
9	I	PA01	34	I	PA13	59	I	CA09	84	I	WA04
10	I	PA02	35	I	PA14	60	I	CA10	85	I	WA05
11	I	PA03	36	I	PA15	61	I	CA11	86	I	WA06
12	I	PA04	37	I	PA16	62	I	CA12	87	I	WA07
13	O	MA003	38	I	CA00	63	O	MA011	88	I	WA08
14	O	MA004	39	I	CA01	64	O	MA012	89	I	WA09
15	-	GND	40	-	GND	65	-	GND	90	-	GND
16	O	MA103	41	I	CK	66	O	MA111	91	I	RENB
17	O	MA104	42	I	SEL0	67	O	MA112	92	I	SEL1
18	I	PA05	43	I	WENB	68	I	CA13	93	I	WA10
19	I	PA06	44	I	CA02	69	I	CA14	94	I	WA11
20	I	PA07	45	I	CA03	70	I	CA15	95	I	WA12
21	I	PA08	46	I	CA04	71	I	CA16	96	I	WA13
22	I	PA09	47	I	CA05	72	I	WA00	97	I	WA14
23	I	PA10	48	I	CA06	73	I	WA01	98	I	WA15
24	I	PA11	49	I	CA07	74	I	WA02	99	I	WA16
25	O	MA005	50	O	MA008	75	O	MA013	100	O	MA000

D8267Q (SONY)

C-MOS MEMORY DATA BUS CONTROL

– TOP VIEW –

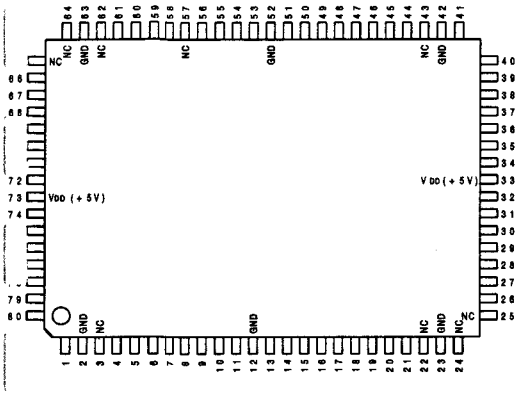

(VDD = +5V)

PIN No.	I/O	SIGNAL	PIN No.	I/O	SIGNAL	PIN No.	I/O	SIGANL	PIN No.	I/O	SIGNAL
	O	SD00	21	O	SD06	41	O	SD10	61	O	SD16
	–	GND	22	–	NC	42	–	GND	62	–	NC
	–	NC	23	–	GND	43	–	NC	63	–	GND
4	O	SD01	24	–	NC	44	O	SD11	64	–	NC
5	I/O	RD20	25	–	NC	45	I/O	RD30	65	–	NC
6	I/O	RD21	26	O	SD07	46	I/O	RD31	66	O	SD17
	I/O	RD22	27	I/O	SD25	47	I/O	RD32	67	I/O	RD35
	I/O	RD03	28	I/O	SD26	48	I/O	RD13	68	I/O	RD36
	I/O	RD04	29	I/O	SD27	49	I/O	RD14	69	I/O	RD37
10	O	SD02	30	I	WD0	50	O	SD12	70	I	WD4
11	O	SD03	31	I	WD1	51	O	SD13	71	I	WD5
12	–	GND	32	I	WD2	52	–	GND	72	I	WD6
3	O	SD04	33	–	VDD	53	O	SD14	73	–	VDD
4	O	SD05	34	I	WD3	54	O	SD15	74	I	WD7
5	I/O	RD23	35	I	RCK	55	I/O	RD33	75	I	WCK
5	I/O	RD24	36	I	RENB	56	I/O	RD34	76	I	WENB
17	I	MODE	37	I	SEL0	57	–	NC	77	I	SEL1
18	I/O	RD05	38	I/O	RD10	58	I/O	RD15	78	I/O	RD00
19	I/O	RD06	39	I/O	RD11	59	I/O	RD16	79	I/O	RD01
0	I/O	RD07	40	I/O	RD12	60	I/O	RD17	80	I/O	RD02

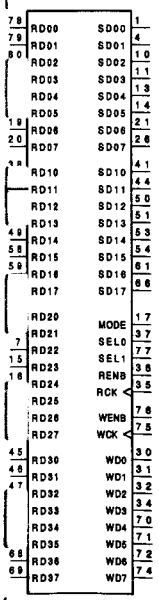

INPUT

MODE ; DATA BUS CONTROLLER/SELECTOR CHANGE
(0:DATA BUS CONTROLLER, 1:2 TO 1 SELECTOR)
RCK ; CLOCK FOR READ SYSTEM
RENB ; LATCH ENABLE FOR SD00-SD07,SD10-SD17
SEL0 ; • READ/WRITE CHANGE (DATA BUS CONTROLLER MODE)

	RD0・RD1	RD2・RD3
0	READ	WRITE
1	WRITE	READ

• SD0 OUTPUT DATA SELECT (SELECTOR MODE)
(0:RD1, 1:RD3)
SEL1 ; SD1 OUTPUT DATA SELECT (SELECTOR MODE)
WCK ; CLOCK FOR WRITE SYSTEM
WD0-WD7 ; MEMORY WRITE DATA
WENB ; LATCH ENABLE FOR WD0-WD7

OUTPUT

SD00-SD07,SD10-SD17 ;
READ DATA OUT FROM MEMORY

INPUT/OUTPUT

RD00-RD07,RD10-RD17,RD20-RD27,RD30-RD37 ;
READ DATA IN/WRITE DATA OUT

CXD8276Q (SONY)

C-MOS LINEAR INTERPOLATION

– TOP VIEW –

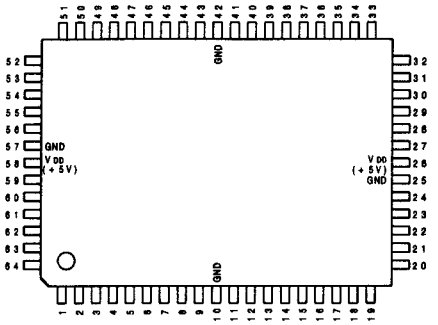

(VDD = +5V)

PIN No.	I/O	SIGNAL	PIN No.	I/O	SIGNAL	PIN No.	I/O	SIGANL	PIN No.	I/O	SIGNAL
1	I	D6	17	I	B4	33	I	RAS	49	I	C2
2	I	D7	18	I	B5	34	I	RBS	50	I	C3
3	I	A0	19	I	B6	35	I	RAW	51	I	C4
4	I	A1	20	I	B7	36	I	RBW	52	I	C5
5	I	A2	21	O	R0	37	I	RND	53	I	C6
6	I	A3	22	O	R1	38	O	Q0	54	I	C7
7	I	A4	23	O	R2	39	O	Q1	55	I	C8
8	I	A5	24	O	R3	40	O	Q2	56	I	CK
9	I	CLR	25	–	GND	41	O	Q3	57	–	GND
10	–	GND	26	–	VDD	42	–	GND	58	–	VDD
11	I	A6	27	O	R4	43	O	Q4	59	I	D0
12	I	A7	28	O	R5	44	O	Q5	60	I	D1
13	I	B0	29	O	R6	45	O	Q6	61	I	D2
14	I	B1	30	O	R7	46	O	Q7	62	I	D3
15	I	B2	31	I	MOD	47	I	C0	63	I	D4
16	I	B3	32	I	MSQ	48	I	C1	64	I	D5

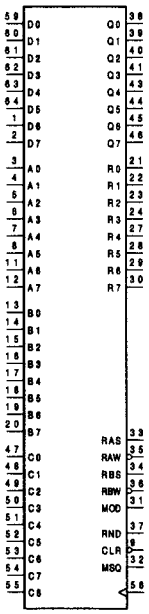

INPUT

A0-A7 ; A DATA PORT
B0-B7 ; B DATA PORT
C0-C8 ; C DATA PORT
CK ; CLOCK
CLR ; CLEAR
D0-D7 ; INTERNAL REGISTER PORT
MOD ; MODE SELECT
(0:8-BIT MODE, 1:9-BIT MODE)
MSQ ; RANDOM NUMBER GENERATE
RAS ; REG A SELECT
RAW ; WRITE A REGISTER
RBS ; REG B SELECT
RBW ; WRITE B REGISTER
RND ; INTEGER DATA OUT CANCEL

OUTPUT

R0-R7 ; • MINOR GROUP PORT (MSQ:0)
• DUMMY RANDOM NUMBER (MSQ:1)
Q0-Q7 ; INTEGER GROUP DATA PORT

CXK1206AM (SONY) FLAT PACKAGE

C-MOS VIDEO FIELD MEMORY (960-COLUMNx306-ROWx4-BIT)
– TOP VIEW –

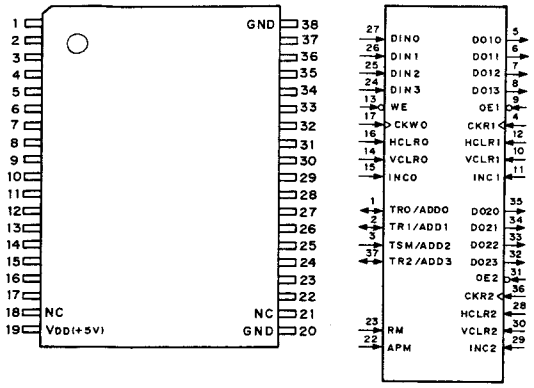

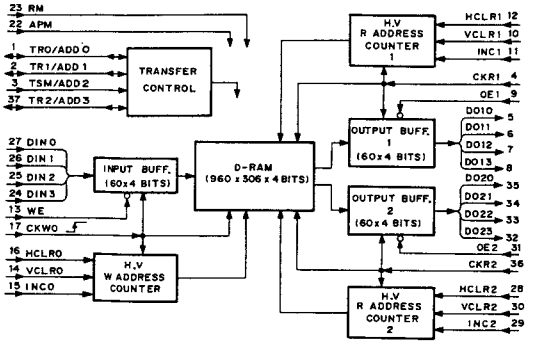

PIN	SIGNAL	DESCRIPTION
1	TR0/ADD0	W PORT 0 TRANSFER SYNC I/O, ADDRESS 0 INPUT
2	TR1/ADD1	R PORT 1 TRANSFER SYNC I/O, ADDRESS 1 INPUT
3	TSM/ADD2	TRANSFER SYNCHRONOUS MODE, ADDRESS 2 INPUT
4	CKR1	R PORT 1 SHIFT SIGNAL INPUT
5	DO10	R PORT 1 DATA 0 OUTPUT
6	DO11	R PORT 1 DATA 1 OUTPUT
7	DO12	R PORT 1 DATA 2 OUTPUT
8	DO13	R PORT 1 DATA 3 OUTPUT
9	OE1	R PORT 1 OUTPUT ENABLE INPUT
10	VCLR1	R PORT 1 VERTICAL CLEAR INPUT
11	INC1	R PORT 1 LINE INCREMENT INPUT
12	HCLR1	R PORT 1 HORIZONTAL CLEAR INPUT
13	WE	W PORT 0 WRITE ENABLE INPUT
14	VCLR0	W PORT 0 VERTICAL CLEAR INPUT
15	INC0	W PORT 0 LINE INCREMENT INPUT
16	HCLR0	W PORT 0 HORIZONTAL CLEAR INPUT
17	CKW0	W PORT 0 SHIFT SIGNAL INPUT
18	NC	(no connection)
19	VDD	+5V INPUT
20	GND	GND
21	NC	(no connection)
22	APM	ADDRESS PRESET MODE INPUT
23	RM	RECURSIVE MODE ENABLE INPUT
24	DIN3	W PORT 0 DATA 3 INPUT
25	DIN2	W PORT 0 DATA 2 INPUT
26	DIN1	W PORT 0 DATA 1 INPUT
27	DIN0	W PORT 0 DATA 0 INPUT
28	HCLR2	R PORT 2 HORIZONTAL CLEAR INPUT
29	INC2	R PORT 2 LINE INCREMENT INPUT
30	VCLR2	R PORT 2 VERTICAL CLEAR INPUT
31	OE2	R PORT 2 OUTPUT ENABLE INPUT
32	DO23	R PORT 2 DATA 3 OUTPUT
33	DO22	R PORT 2 DATA 2 OUTPUT
34	DO21	R PORT 2 DATA 1 OUTPUT
35	DO20	R PORT 2 DATA 0 OUTPUT
36	CKR2	R PORT 2 SHIFT SIGNAL INPUT
37	TR2/ADD3	R PORT 2 TRANSFER SYNC I/O, ADDRESS 3 INPUT
38	GND	GND

MODE SELECTION

CONTROL INPUTS			TS, TR/ADD		MODE
RM	APM	TSM	TR 0-2	ADD 0-3	
0	0	0	OUT-PUT	-	NON RECURSIVE MODE, TRANSFER SYNCHRONOUS MODE OUTPUT
0	0	1	IN-PUT	-	NON RECURSIVE MODE, TRANSFER SYNCHRONOUS MODE INPUT
0	1	-	-	IN-PUT	NON RECURSIVE MODE, ADDRESS PRESET MODE
1	0	0	OUT-PUT	-	RECURSIVE MODE, TRANSFER SYNCHRONOUS MODE OUTPUT
1	0	1	IN-PUT	-	RECURSIVE MODE, TRANSFER SYNCHRONOUS MODE INPUT

0:LOW LEVEL 1:HIGH LEVEL

CXK54256P-35 (SONY) (ACCESS TIME = 35nS)

C-MOS 256K (65536x4)-BIT STATIC RAM
– TOP VIEW –

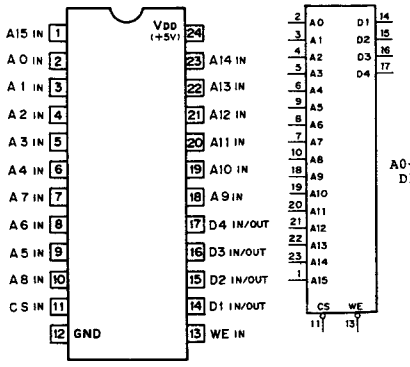

A0–A15 ; ADDRESS INPUTS
D1–D4 ; DATA INPUTS/OUTPUTS
CS ; CHIP SELECT INPUT
WE ; WRITE ENABLE INPUT

WE	CS	D1-D4	FUNCTION
X	1	HI-Z	STANDBY
1	0	D OUT	READ
0	0	D IN	WRITE

0 ; LOW LEVEL
1 ; HIGH LEVEL
X ; DON'T CARE
HI-Z ; HIGH IMPEDANCE

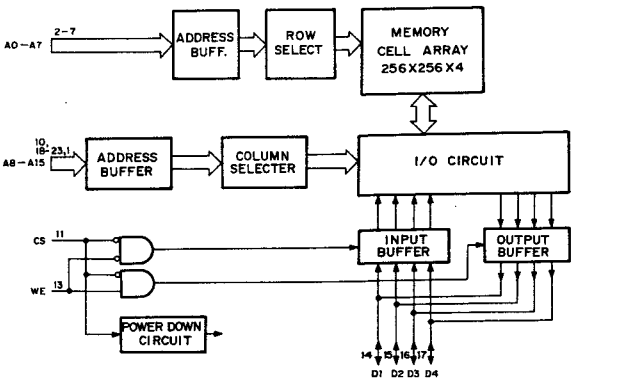

CXK58258AP-25 (SONY)

C-MOS 256K (32768x8)-BIT STATIC RAM
– TOP VIEW –

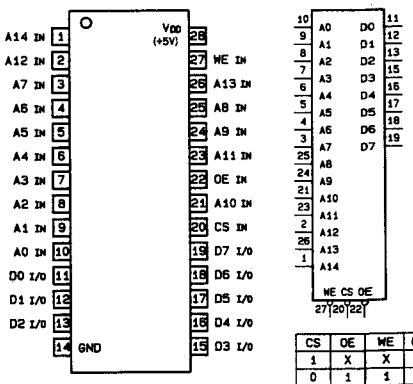

A0–A14; ADDRESS INPUTS
D0–D7; DATA INPUTS/OUTPUTS
CS; CHIP SELECT INPUT
OE; OUTPUT ENABLE INPUT
WE; WRITE ENABLE INPUT

CS	OE	WE	OUTPUTS	FUNCTION
1	X	X	HI-Z	NO SELECTION
0	1	1	HI-Z	OUTPUT DISABLE
0	0	1	D OUT	READ
0	X	0	D IN	WRITE

0: LOW LEVEL
1: HIGH LEVEL
X: DON'T CARE
HI-Z: HIGH IMPEDANCE

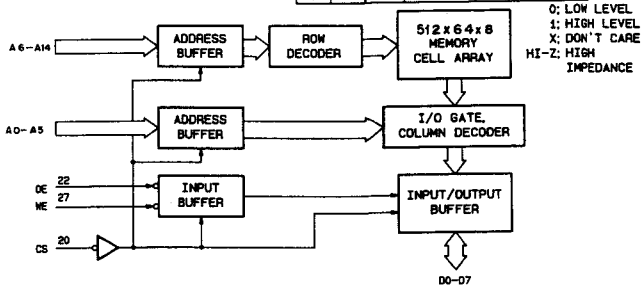

XK5464AP-35 (SONY)

C-MOS 64K (16,384x4)-BIT STATIC RAM

– TOP VIEW –

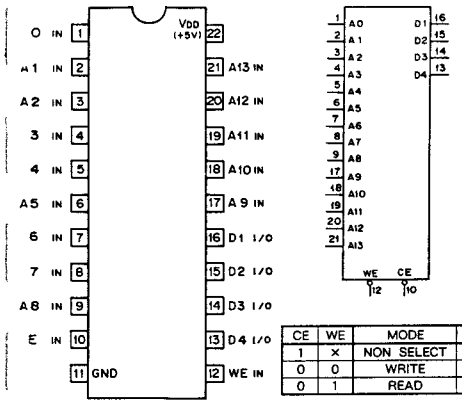

CE	WE	MODE	D1 – D4
1	×	NON SELECT	HI-Z
0	0	WRITE	INPUT
0	1	READ	OUTPUT

0 ; LOW LEVEL
1 ; HIGH LEVEL
× ; DON'T CARE

A0 – A13 ; ADDRESS INPUTS
E ; WRITE ENABLE INPUT

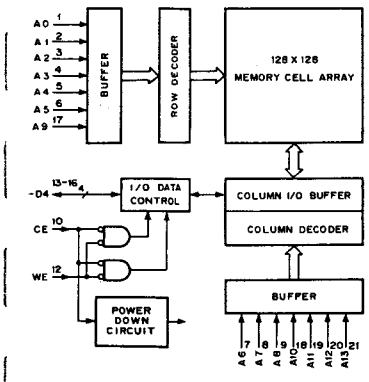

XK5814P-35 (SONY)

MOS 16K (2Kx8) STATIC RAM

TOP VIEW –

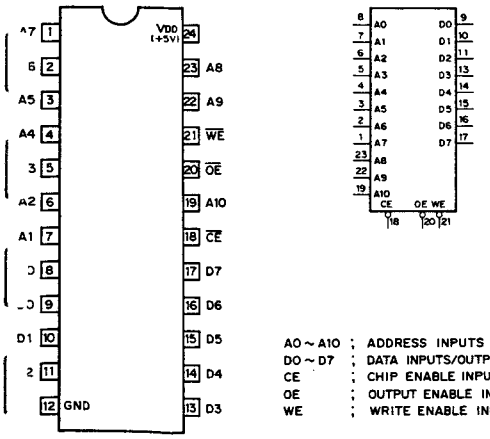

A0 ~ A10 ; ADDRESS INPUTS
D0 ~ D7 ; DATA INPUTS/OUTPUTS
CE ; CHIP ENABLE INPUT
OE ; OUTPUT ENABLE INPUT
WE ; WRITE ENABLE INPUT

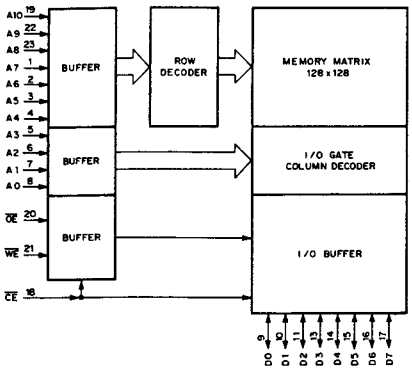

CXK58257AM-12LL (SONY) FLAT PACKAGE

C-MOS 256K (32768x8)-BIT STATIC RAM

– TOP VIEW –

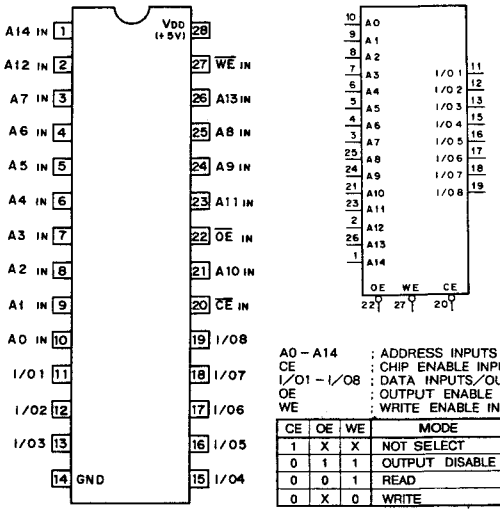

A0 – A14 ; ADDRESS INPUTS
CE ; CHIP ENABLE INPUT
I/O1 – I/O8 ; DATA INPUTS/OUTPUTS
OE ; OUTPUT ENABLE INPUT
WE ; WRITE ENABLE INPUT

CE	OE	WE	MODE	I/O TERMINAL
1	X	X	NOT SELECT	HIGH IMPEDANCE
0	1	1	OUTPUT DISABLE	HIGH IMPEDANCE
0	0	1	READ	OUTPUT DATA
0	X	0	WRITE	INPUT DATA

0 ; LOW LEVEL
1 ; HIGH LEVEL
X ; DON'T CARE

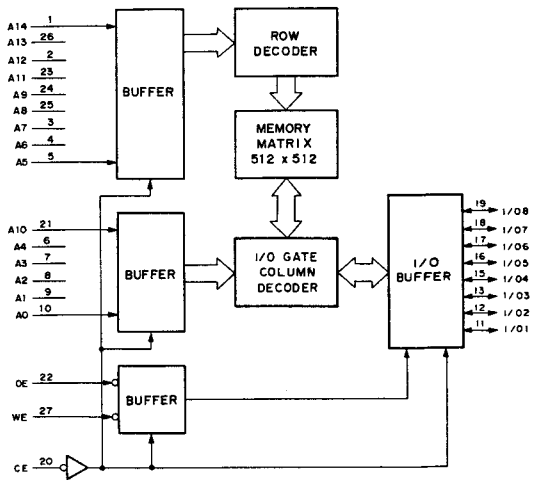

CXK5863P-25 (SONY)

C-MOS 8192-WORDx8-BIT HIGH SPEED STATIC RAM
– TOP VIEW –

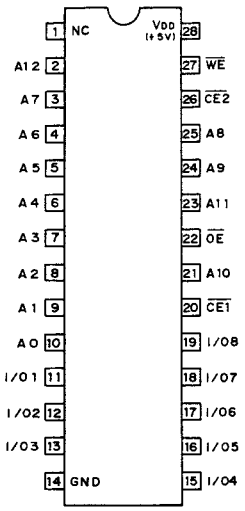

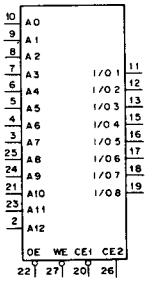

A0 – A14 : ADDRESS INPUTS
CE1, CE2 : CHIP ENABLE INPUT
I/O1 – I/O8 : DATA INPUTS/OUTPUTS
OE : OUTPUT ENABLE INPUT
WE : WRITE ENABLE INPUT

CE1	CE2	OE	WE	MODE	I/O TERMINAL
1	X	X	X	NOT SELECT	HIGH IMPEDANCE
X	0	X	X	NOT SELECT	HIGH IMPEDANCE
0	1	1	1	OUTPUT DISABLE	HIGH IMPEDANCE
0	1	0	1	READ	OUTPUT DATA
0	1	X	0	WRITE	INPUT DATA

0 : LOW LEVEL
1 : HIGH LEVEL
X : DON'T CARE

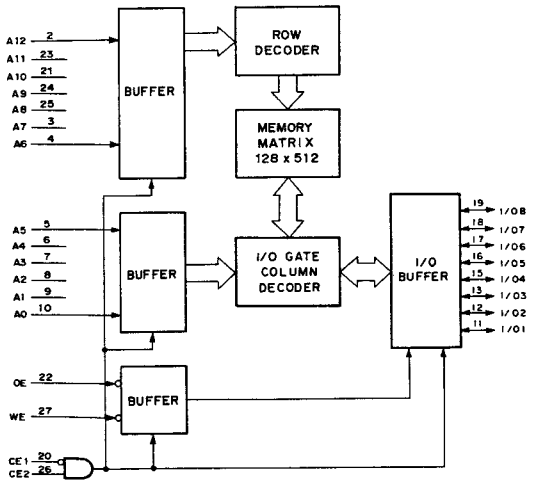

CXK5864BSP-70L (SONY)

C-MOS 64K (8192x8)-BIT STATIC RAM
– TOP VIEW –

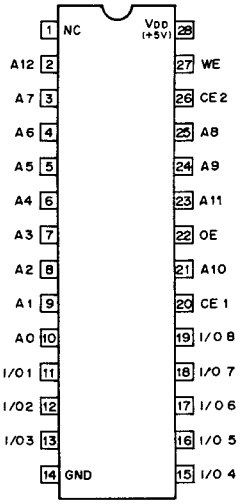

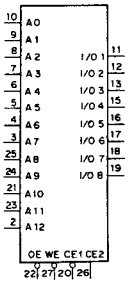

A0-A12 ; ADDRESS INPUT
CE1, CE2 ; CHIP ENABLE INPUT
I/O1-I/O8 ; DATA INPUT/OUTPUT
OE ; OUTPUT ENABLE INPUT
WE ; WRITE ENABLE INPUT

CE1	CE2	OE	WE	MODE	I/O TERMINAL
1	X	X	X	NOT SELECT	HIGH IMPEDANCE
X	0	X	X	NOT SELECT	HIGH IMPEDANCE
0	1	1	1	OUTPUT DISABLE	HIGH IMPEDANCE
0	1	0	1	READ	OUTPUT DATA
0	1	X	0	WRITE	INPUT DATA

0;LOW LEVEL
1;HIGH LEVEL
X;DON'T CARE

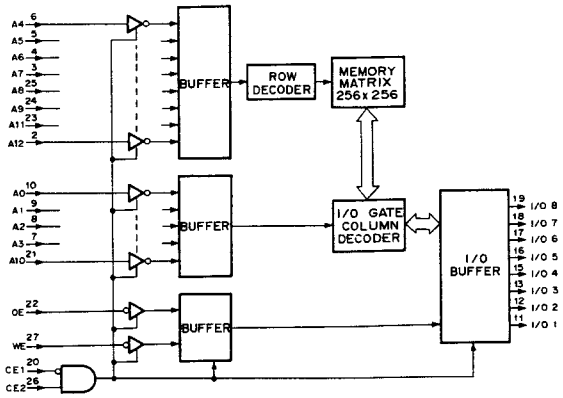

(Q70108P-8 (SONY)

-MOS 8-BIT MICROPROCESSOR

– TOP VIEW –

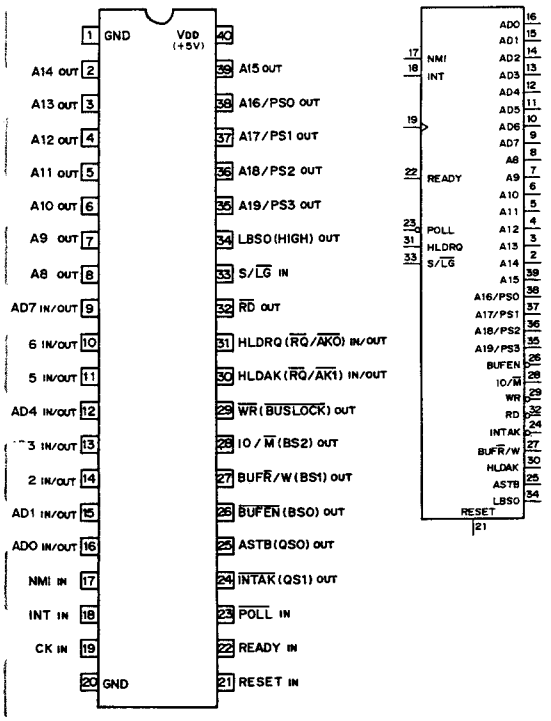

PIN	FUNCTION	
NO.	S/LG=HIGH LEVEL	S/LG=LOW LEVEL
24	INTAK	QS1
25	ASTB	QS0
26	BUFEN	BS0
27	BUF R/W	BS1
28	IO/M	BS2
29	WR	BUSLOCK
30	HLDAK	RQ/AK1
31	HLDRQ	RQ/AK0
4	LBS0	HIGH LEVEL

A8–A15 ; ADDRESS BUS OUTPUTS
AD0–AD7 ; ADDRESS/DATA BUS INPUTS/OUTPUTS
NMI ; NON-MASKABLE INTERRUPT INPUT
INT ; MASKABLE INTERRUPT INPUT
CK ; CLOCK INPUT
INTAK ; INTERRUPT ACKNOWLEDGE OUTPUT
ASTB ; ADDRESS STROBE OUTPUT
BUFEN ; BUFFER ENABLE OUTPUT
BUFR/W ; BUFFER READ/WRITE OUTPUT
IO/M ; IO/MEMORY OUTPUT
WR ; WRITE STROBE OUTPUT
HLDAK ; HOLD ACKNOWLEDGE OUTPUT
HLDRQ ; HOLD REQUEST INPUT
RD ; READ STROBE OUTPUT
S/LG ; SMALL/LARGE INPUT
LBS0 ; LATCHED BUS STATUS 0 OUTPUT
A16/PS0–A19/PS3 ; ADDRESS BUS/PROCESSOR STATUS OUTPUTS
QS0 ,1 ; QUEUE STATUS OUTPUTS
BS0–BS2 ; BUS STATUS OUTPUTS
BUSLOCK ; BUS LOCK OUTPUT
RQ/AK0 ,1 ; HOLD REQUEST/ACKNOWLEDGE INPUTS/OUTPUTS

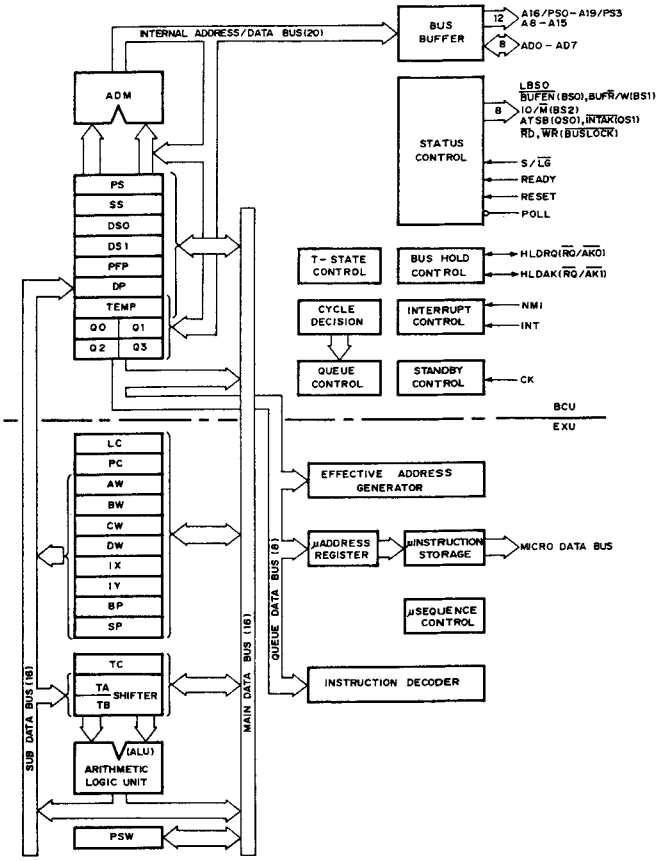

CXQ70116P-10 (SONY)

C-MOS 16-BIT MICROPROCESSOR
– TOP VIEW –

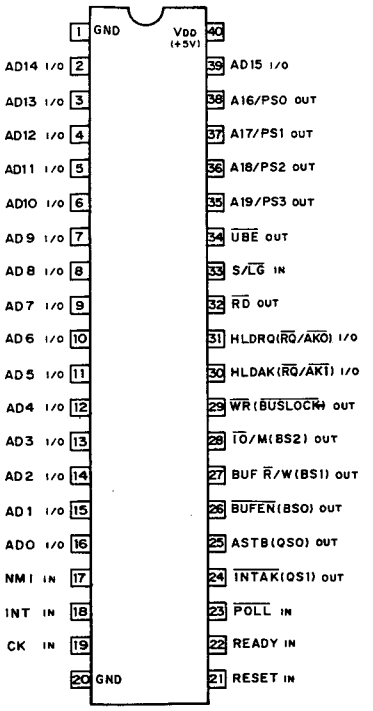

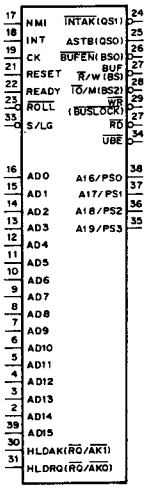

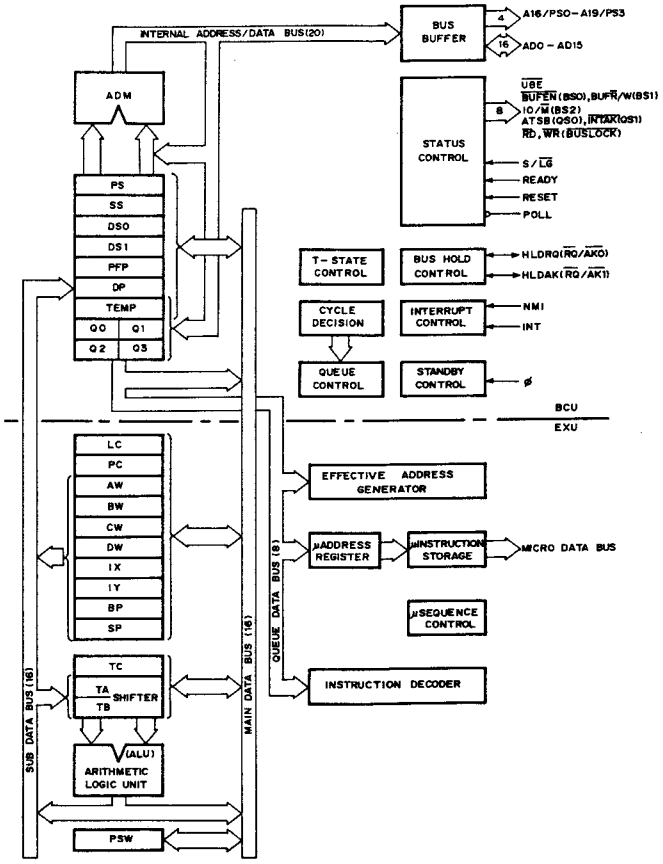


```
AD15-AD0 ; ADDRESS/DATA BUS
     NMI ; NON-MASKABLE INTERRUPT
     INT ; MASKABLE INTERRUPT
      CK ; CLOCK
   INTAK ; INTERRUPT ACKNOWLEDGE
    ASTB ; ADDRESS STROBE
   BUFEN ; BUFFER ENABLE
BUF R/W  ; BUFFER READ/WRITE
    IO/M ; IO MEMORY
      WR ; WRITE STROBE
    HLDAK ; HOLD ACKNOWLEDGE
    HLDRQ ; HOLD REQUEST
      RD ; READ STROBE
     S/LG ; SMALL/LARGE
      UBE ; UPPER BYTE ENABLE
A19/PS3-A16/PS0 ; ADDRESS BUS/PROCESSOR STATUS
     QS1, 0 ; QUEUE STATUS
   BS2-BS0 ; BUS STATUS
   BUSLOCK ; BUS LOCK
RQ/AK1, 0 ; HOLD REQUEST/ACKNOWLEDGE
```

PIN No.	FUNCTION	
	S/LG=HIGH LEVEL	S/LG=LOW LEVEL
24	INTAK	QS1
25	ASTB	QSO
26	BUFEN	BSO
27	BUF R/W	BS1
28	IO/M	BS2
29	WR	BUSLOCK
30	HLDAK	RQ/AK1
31	HLDRQ	RQ/AK0

<Q71051P (SONY)

C-MOS SERIAL CONTROL UNIT
– TOP VIEW –

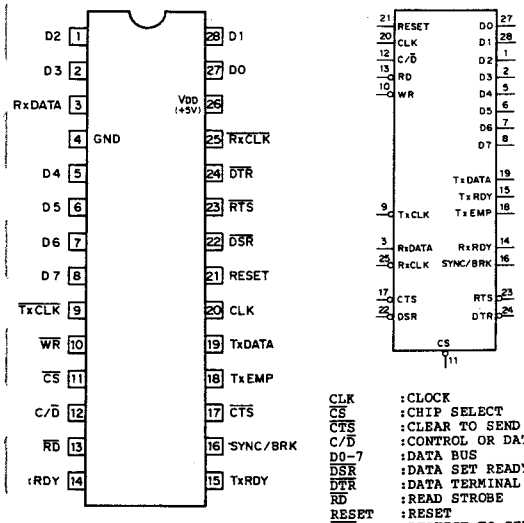

CLK	:CLOCK
$\overline{CS}$	:CHIP SELECT
$\overline{CTS}$	:CLEAR TO SEND
C/$\overline{D}$	:CONTROL OR DATA
D0-7	:DATA BUS
$\overline{DSR}$	:DATA SET READY
$\overline{DTR}$	:DATA TERMINAL READY
$\overline{RD}$	:READ STROBE
RESET	:RESET
$\overline{RTS}$	:REQUEST TO SEND
$\overline{RXCLK}$	:RECEIVER CLOCK
RXDATA	:RECEIVE DATA
RXRDY	:RECEIVER READY
SYNC/$\overline{BRK}$	:SYNCRONIZATION/BREAK
$\overline{TXCLK}$	:TRANSMITTER CLOCK
TXDATA	:TRANSMIT DATA
TXEMP	:TRANSMITTER EMPTY
TXRDY	:TRANSMITTER READY
$\overline{WR}$	:WRITE STROBE

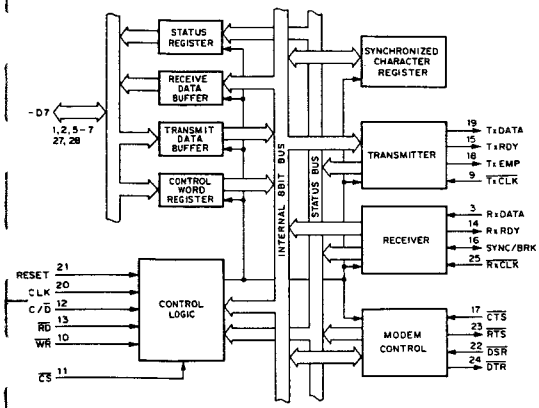

CS	RD	WR	C/D	MODE	FUNCTION
0	0	1	0	RECEIVE DATA BUFFER--> DATA BUS	READ RECEIVE DATA
0	0	1	1	STATUS REGISTER--> DATA BUS	READ STATUS
0	1	0	0	DATA BUS--> TRANSMIT DATA BUFFER	WRITE RECEIVE DATA
0	1	0	1	DATA BUS--> CONTROL WORD REGISTER	WRITE CONTROL WORD
0	1	1	X	DATA BUS:HIGH IMPEDANCE	
1	X	X	X	DATA BUS:HIGH IMPEDANCE	

1:HIGH LEVEL
0:LOW LEVEL
X:DON'T CARE

CXQ71054P (SONY)

C-MOS PROGRAMMABLE TIMER COUNTER
– TOP VIEW –

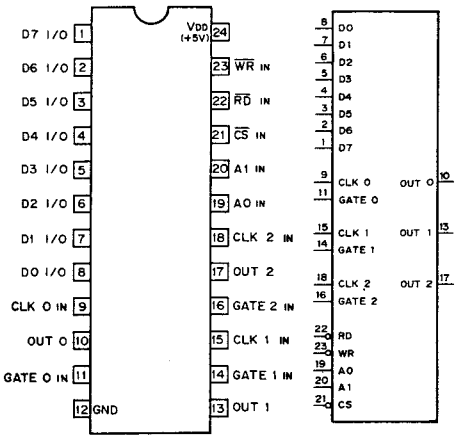

FUNCTION TABLE

CS	RD	WR	A1	A0	FUNCTION
0	1	0	0	0	Load Counter No. 0
0	1	0	0	1	Load Counter No. 1
0	1	0	1	0	Load Counter No. 2
0	1	0	1	1	Control Word
0	0	1	0	0	Read Counter 0
0	0	1	0	1	Read Counter 1
0	0	1	1	0	Read Counter 2
0	0	1	1	1	No-Operation (HI-Z)
1	X	X	X	X	Disable (HI-Z)
0	1	1	X	X	No-Operation (HI-Z)

A0, A1	: COUNTER SELECT INPUTS
CLK 0-2	: COUNTER CLOCK INPUTS
CS	: CHIP SELECT INPUT
D0-D7	: 8-BIT DATA INPUTS/OUTPUTS
GATE 0-2	: COUNTER GATE INPUTS
OUT 0-2	: COUNTER OUTPUTS
RD	: READ COUNTER INPUT
WR	: WRITE CMD OR DATA INPUT

0;LOW LEVEL
1;HIGH LEVEL
X;DON'T CARE
HI-Z;HIGH IMPEDANCE

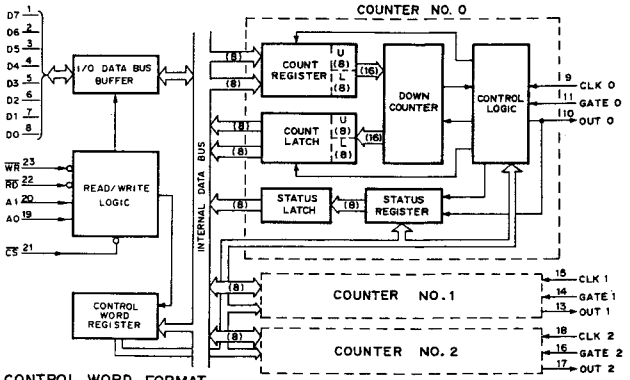

CONTROL WORD FORMAT

D7	D6	D5	D4	D3	D2	D1	DO
SC1	SCO	RL1	RLO	M2	M1	MO	BCD

BCD	OPERATION
0	16-BIT BINARY
1	BCD(4-DECADE)

M2	M1	MO	MODE
0	0	0	0
0	0	1	1
X	1	0	2
X	1	1	3
1	0	0	4
1	0	1	5

RL1	RLO	OPERATION
0	0	COUNTER LATCHING
0	1	READ/LOAD LSB ONLY
1	0	READ/LOAD MSB ONLY
1	1	LSB FIRST THEN MSB

SC1	SCO	SELECTED COUNTER
0	0	COUNTER No. 0
0	1	COUNTER No. 1
1	0	COUNTER No. 2
1	1	MULTIPLE LATCH CMD

HD14053BFP (HITACHI) FLAT PACKAGE

C-MOS TRIPLE 2-CHANNEL ANALOG MULTIPLEXERS/DEMULTIPLEXERS
– TOP VIEW –

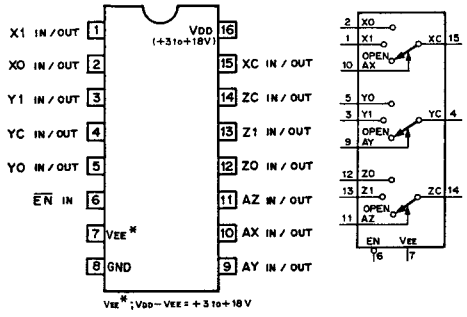

CONT. INPUTS		ON
EN	A (X,Y,Z)	CHANNEL
0	0	0
0	1	1
1	X	OPEN

0; LOW LEVEL
1; HIGH LEVEL
X; DON'T CARE.

IB-38 (AGC)

SC PHASE SHIFTER
– REAR VIEW –

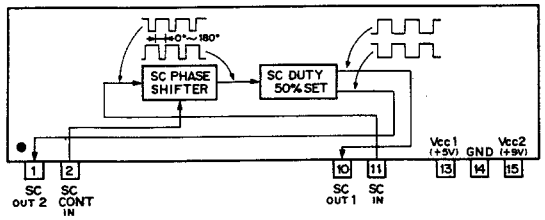

LM1881M (NS) FLAT PACKAGE

VIDEO SYNC SEPARATOR
– TOP VIEW –

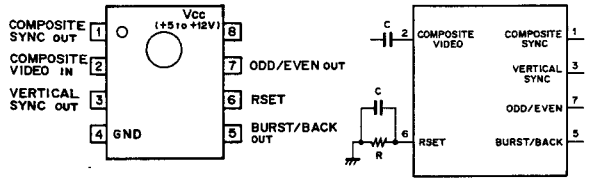

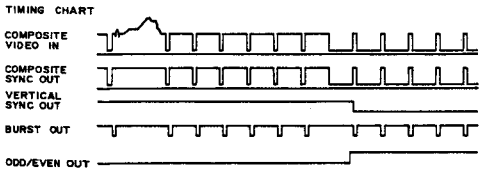

LM311PS (TI) FLAT PACKAGE

VOLTAGE COMPARATOR WITH STROBE
– TOP VIEW –

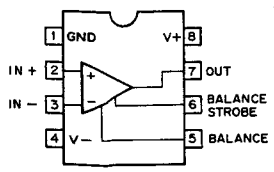

LM358PS (TI) FLAT PACKAGE

DUAL OPERATIONAL AMPLIFIERS
– TOP VIEW –

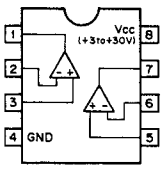

LM6361M (NEC)

HIGH SPEED OPERATIONAL AMPLIFIER
– TOP VIEW –

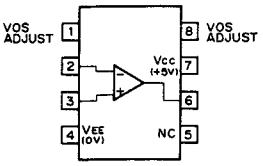

M27C4001-12F1 (SGS)

C-MOS 4M-BIT UV EPROM
– TOP VIEW –

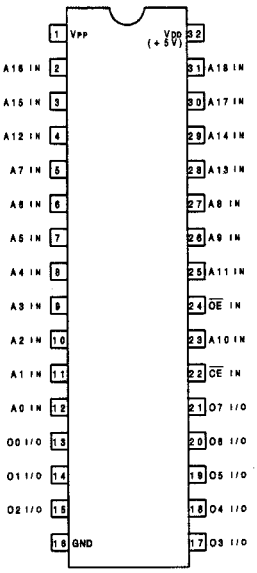

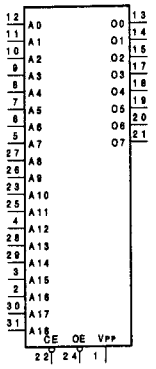

A0-A18;ADDRESS INPUTS
CE ;CHIP ENABLE INPUT
O0-O7 ;DATA INPUTS/OUTPUTS
OE ;OUTPUT ENABLE INPUT
VPP ;PROGRAMMING VOLTAGE INPUT (+12.75V)

PINS					MODE
CE	OE	A9	VPP	O0-O7	
0	0	x	x	D OUT	READ
0	1	x	x	HI-Z	OUTPUT DISABLE
1	x	x	x	HI-Z	STAND BY
0	1	x	VPP	D IN	PROGRAM
1	0	x	VPP	D OUT	PROGRAM VERIFY
1	1	x	VPP	HI-Z	PROGRAM INHIBIT
0	0	+12V	VPP	CODE	ELECTRONIC SIGNATURE

0 ;LOW LEVEL
1 ;HIGH LEVEL
X ;DON'T CARE
HI-Z;HIGH IMPEDANCE

INDENTIFIER	A0	CODE DATA							
		O7	O6	O5	O4	O3	O2	O1	O0
MANUFACTURER CODE	0	0	0	1	0	0	0	0	0 20
DEVICE CODE	1	0	1	0	0	0	0	1	41

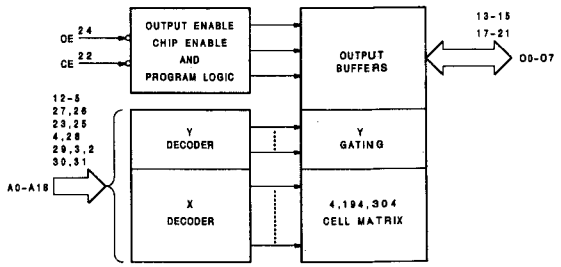

:51271FP (MITSUBISHI) FLAT PACKAGE
..TSC, PAL CHROMA DECODER
– TOP VIEW –

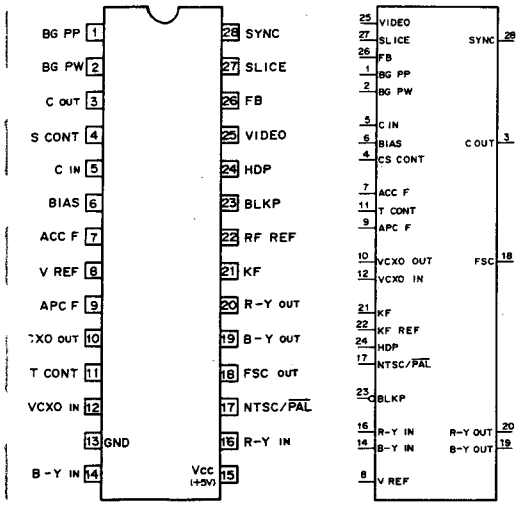

ACC F ; AUTOMATIC COLOR CONTROL FILTER
APC F ; AUTOMATIC PHASE CONTROL FILTER
BG PP ; BURST GATE PULSE POSITION
BG PW ; BURST GATE PULSE WIDTH
BIAS ; CHROMA INPUT BIAS CAPACITY
BLKP ; BLANKING PULSE INPUT
B-Y ; B-Y SIGNAL INPUT/OUTPUT
C ; CHROMA SIGNAL INPUT/OUTPUT
CS CONT ; COLOR SATURATION CONTROL
FB ; FEEDBACK CAPACITY OF SYNC SEPARATION
FSC ; SUB-CARRIER OUTPUT (180 DEGREES)
HDP ; HORIZONTAL DRIVE PULSE INPUT
KF ; KILLER FILTER CAPACITY
KF REF ; KILLER REFERENCE FILTER CAPACITY
NTSC/PAL ; PROCESS SELECT
R-Y ; R-Y SIGNAL INPUT/OUTPUT
SLICE ; SLICE LEVEL INPUT OF SYNC SEPARATION
SYNC ; SEPARATION SYNC SIGNAL OUTPUT
T CONT ; TINT CONTROL
VCXO ; VARIABLE CAPACITOR AND CRYSTAL OSCILLATOR
VIDEO ; VIDEO INPUT FOR SYNC SEPARATION
V REF ; REFERENCE VOLTAGE

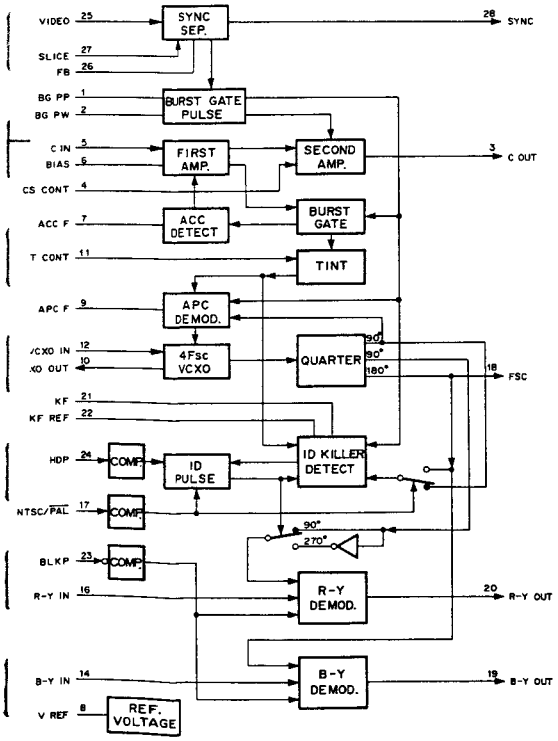

MAX691CPE (MAXIM)
C-MOS MICROPROCESSOR SUPERVISORY CIRCUITS
– TOP VIEW –

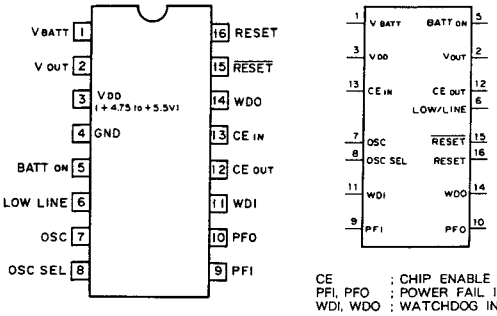

CE ; CHIP ENABLE
PFI, PFO ; POWER FAIL INPUT/OUTPUT
WDI, WDO ; WATCHDOG INPUT/OUTPUT

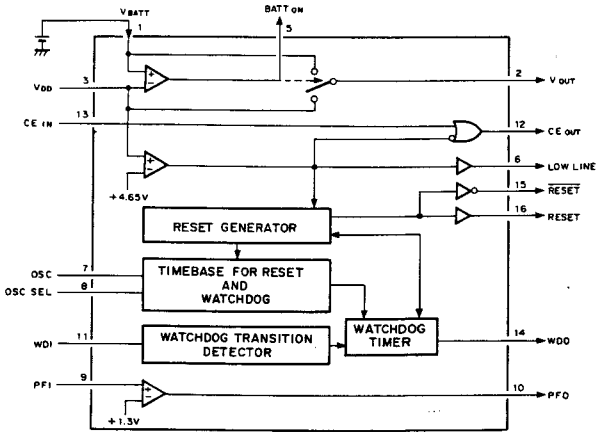

MC14052BF (MOTOROLA) FLAT PACKAGE
C-MOS DUAL 4-CHANNEL ANALOG MULTIPLEXERS/DEMULTIPLEXERS
– TOP VIEW –

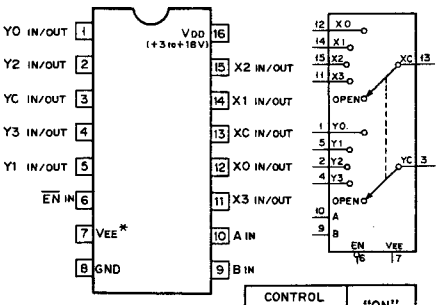

VEE* ; VDD – VEE = +3 to +18V

CONTROL INPUTS			"ON" CHANNEL
EN	B	A	
0	0	0	0
0	0	1	1
0	1	0	2
0	1	1	3
1	X	X	OPEN

0 ; LOW LEVEL
1 ; HIGH LEVEL
X ; DON'T CARE.

MBM27C256A-25CZ-X (FUJITSU)

C-MOS 256K (32Kx8)-BIT UV ERASABLE PROM WITH 3-STATE OUTPUTS
– TOP VIEW –

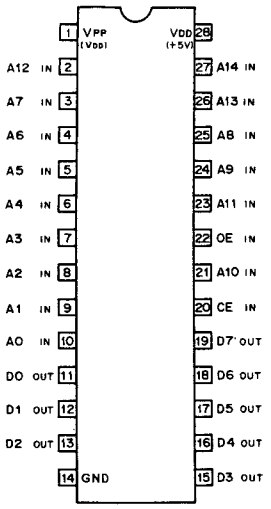

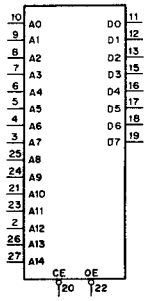

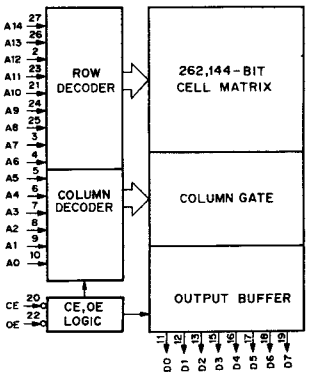

AO – A14 : ADDRESS INPUTS
CE : CHIP ENABLE INPUT
DO – D7 : DATA OUTPUTS
OE : OUTPUT ENABLE INPUT
V_{PP} : PROGRAM POWER SUPPLY

An	CE	OE	VDD	Vpp	Dn	FUNCTION
An	0	0	+5V	+5V	DOUT	READ
An	0	1	+5V	+5V	HI-Z	OUTPUT DISABLE
X	1	X	+5V	+5V	HI-Z	STANDBY
An	0	1	+6V	+12.5V	DIN	PGM
An	1	0	+6V	+12.5V	DOUT	PGM VERIFY(1)
An	0	0	+6V	+12.5V	DOUT	PGM VERIFY(2)
X	1	1	+6V	+12.5V	HI-Z	PGM INH
AO	0	0	+5V	+5V	DEVICE CODE	ELECTRONIC SIGNATURE*

0:LOW LEVEL
1:HIGH LEVEL
X:DON'T CARE
HI-Z:HIGH IMPEDANCE

*SEE FOLLOWING DESCRIPTION.

ELECTRONIC SIGNATURE FOR P ROM WRITER

ADDRESS SETTINGS IN READ MODE

A1 – A8	A9	A10 – A13	A14, Vpp
0	12V	0	1

	CODE DATA								
	AO	D7	D6	D5	D4	D3	D2	D1	DO	
MAKER CODE	0	0	0	0	0	0	1	0	0	04H
DEVICE CODE	1	0	1	1	0	0	0	1	0	62H

MC74HC113F (MOTOROLA) FLAT PACKAGE
SN74HC113NS (TI) FLAT PACKAGE

C-MOS J-K FLIP-FLOP WITH SET
– TOP VIEW –

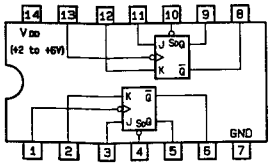

INPUTS				OUTPUTS	
Sd	CK	J	K	Q	$\bar{Q}$
0	X	X	X	1	0
1	↓	0	0	NO CHANGE	
1	↓	0	1	0	1
1	↓	1	0	1	0
1	↓	1	1	TOGGLE	
1	1	X	X	NO CHANGE	
1	0	X	X	NO CHANGE	
1	↑	X	X	NO CHANGE	

0; LOW LEVEL X; DON'T CARE
1; HIGH LEVEL

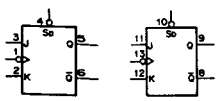

MC74HC154N (MOTOROLA)

C-MOS 4-TO-16 LINE DECODER/DEMULTIPLEXER
– TOP VIEW –

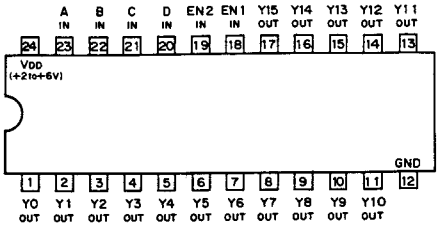

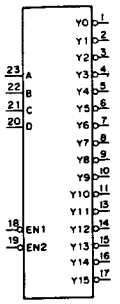

INPUTS						OUTPUTS															
EN1	EN2	D	C	B	A	Y15	Y14	Y13	Y12	Y11	Y10	Y9	Y8	Y7	Y6	Y5	Y4	Y3	Y2	Y1	Y0
0	0	0	0	0	0	1	1	1	1	1	1	1	1	1	1	1	1	1	1	1	0
0	0	0	0	0	1	1	1	1	1	1	1	1	1	1	1	1	1	1	1	0	1
0	0	0	0	1	0	1	1	1	1	1	1	1	1	1	1	1	1	1	0	1	1
0	0	0	0	1	1	1	1	1	1	1	1	1	1	1	1	1	1	0	1	1	1
0	0	0	1	0	0	1	1	1	1	1	1	1	1	1	1	1	0	1	1	1	1
0	0	0	1	0	1	1	1	1	1	1	1	1	1	1	1	0	1	1	1	1	1
0	0	0	1	1	0	1	1	1	1	1	1	1	1	1	0	1	1	1	1	1	1
0	0	0	1	1	1	1	1	1	1	1	1	1	1	0	1	1	1	1	1	1	1
0	0	1	0	0	0	1	1	1	1	1	1	1	0	1	1	1	1	1	1	1	1
0	0	1	0	0	1	1	1	1	1	1	1	0	1	1	1	1	1	1	1	1	1
0	0	1	0	1	0	1	1	1	1	1	0	1	1	1	1	1	1	1	1	1	1
0	0	1	0	1	1	1	1	1	1	0	1	1	1	1	1	1	1	1	1	1	1
0	0	1	1	0	0	1	1	1	0	1	1	1	1	1	1	1	1	1	1	1	1
0	0	1	1	0	1	1	1	0	1	1	1	1	1	1	1	1	1	1	1	1	1
0	0	1	1	1	0	1	0	1	1	1	1	1	1	1	1	1	1	1	1	1	1
0	0	1	1	1	1	0	1	1	1	1	1	1	1	1	1	1	1	1	1	1	1
X	1	X	X	X	X	1	1	1	1	1	1	1	1	1	1	1	1	1	1	1	1
1	X	X	X	X	X	1	1	1	1	1	1	1	1	1	1	1	1	1	1	1	1

0; LOW LEVEL
1; HIGH LEVEL
X; DON'T CARE

N74F377N (SIGNETICS)

TTL D-TYPE FLIP-FLOP WITH ENABLE
– TOP VIEW –

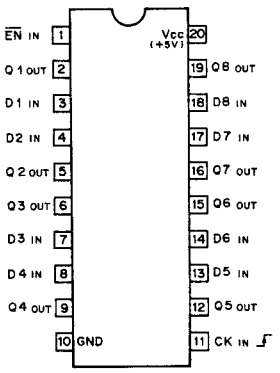

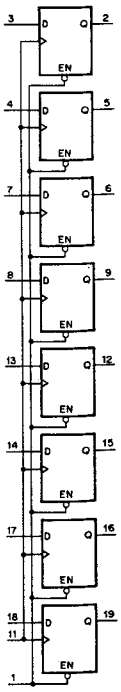

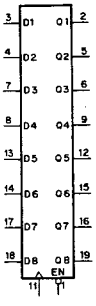

EACH FLIP-FLOP

INPUTS			OUT
EN	CK	D	Q
1	X	X	Qo
0	↑	1	1
0	↑	0	0
X	0	X	Qo

0; LOW LEVEL
1; HIGH LEVEL
X; DON'T CARE

JM13700M (JRC) FLAT PACKAGE
DUAL OPERATIONAL TRANSCONDUCTANCE AMPLIFIER
– TOP VIEW –

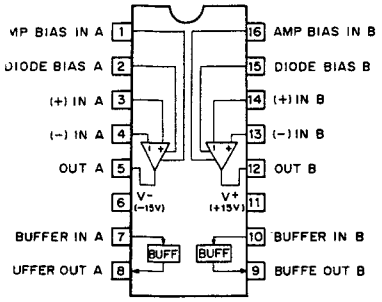

JM2233BM (JRC) FLAT PACKAGE
2-INPUT VIDEO SIGNAL SWITCH
– TOP VIEW –

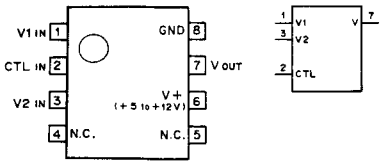

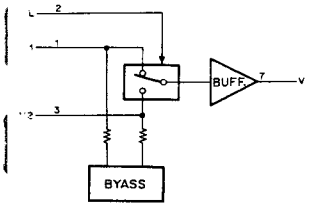

CTL	V
0	V1
1	V2

0 : LOW LEVEL
1 : HIGH LEVEL

JM2234M (JRC) FLAT PACKAGE
JM2245M (JRC) FLAT PACKAGE
3-INPUT VIDEO SIGNAL SWITCH
– TOP VIEW –

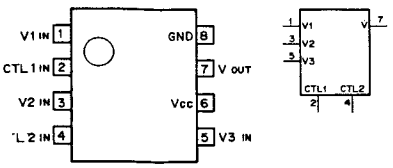

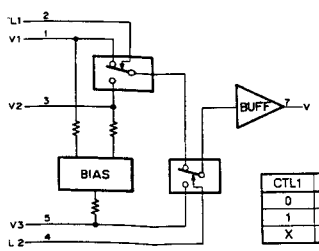

CTL1	CTL2	V
0	0	V1
1	0	V2
X	1	V3

0 : LOW LEVEL
1 : HIGH LEVEL
X : DON'T CARE

TYPE	GAIN	Vcc
NJM2234M	0 dB	+5 to +12V
NJM2245M	+6 dB	+8.5 to +13V

NJM2235M (JRC) FLAT PACKAGE
NJM2246M (JRC) FLAT PACKAGE
3-INPUT VIDEO SIGNAL SWITCH
– TOP VIEW –

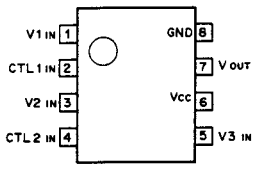

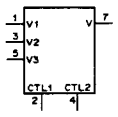

CTL1	CTL2	V
0	0	V1
1	0	V2
X	1	V3

0 : LOW LEVEL
1 : HIGH LEVEL
X : DON'T CARE

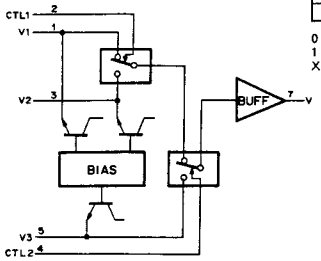

TYPE	GAIN	Vcc
NJM2235M	0 dB	+5 to +15V
NJM2246M	+6 dB	+4.75 to +13V

NJM78L05A (JRC) + 5V (100mA)
NJM78L09A (JRC) + 9V (100mA)
POSITIVE VOLTAGE REGULATOR

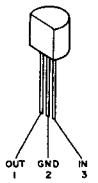

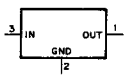

NJM360M (JRC) FLAT PACKAGE
HIGH SPEED VOLTAGE COMPARATOR
(TTL OUTPUT)
– TOP VIEW –

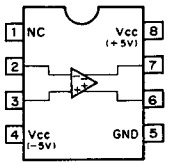

NJM7905FA (JRC) – 5V
NJM7909FA (JRC) – 9V
NEGATIVE VOLTAGE REGULATOR
– FRONT VIEW –

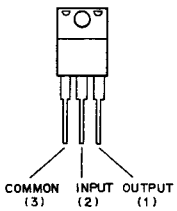

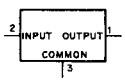

NJM79L09A (JRC) – 9V
NEGATIVE VOLTAGE REGULATOR (100mA)

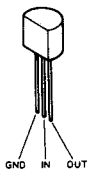

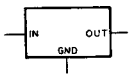

PAL16L8BCN (AMD/MONOLITHIC MEMORIES)

PROGRAMMABLE LOGIC DEVICE

– TOP VIEW –

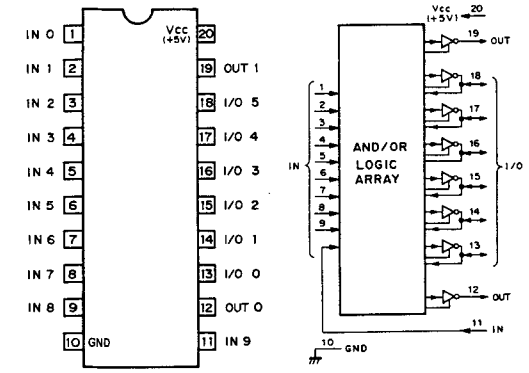

* ABOVE DIAGRAM SHOWS CONDITIONS BEFORE PROGRAMMING.

PST523C (MITSUMI) 4.5V

SYSTEM RESETTING DEVICE

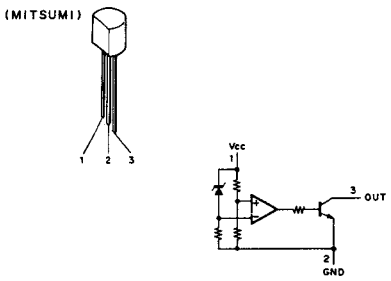

REF.; REFERENCE VOLTAGE

SC7S00F (MOTOROLA) FLAT PACKAGE

C-MOS 2-INPUT NAND GATE

– TOP VIEW –

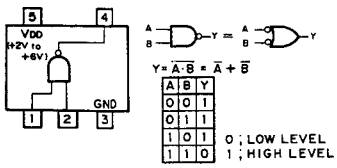

A	B	Y
0	0	1
0	1	1
1	0	1
1	1	0

0 ; LOW LEVEL
1 ; HIGH LEVEL

SI-3522V (SANKEN)

POSITIVE VOLTAGE REGULATOR (2A)

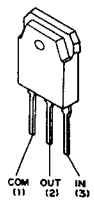

5V SI-3052V
5.2V SI-3522V
12V SI-3122V

SM5828P (NPC)

C-MOS 128 STEPS 8 BITS PROGRAMABLE SHIFT REGISTER

– TOP VIEW –

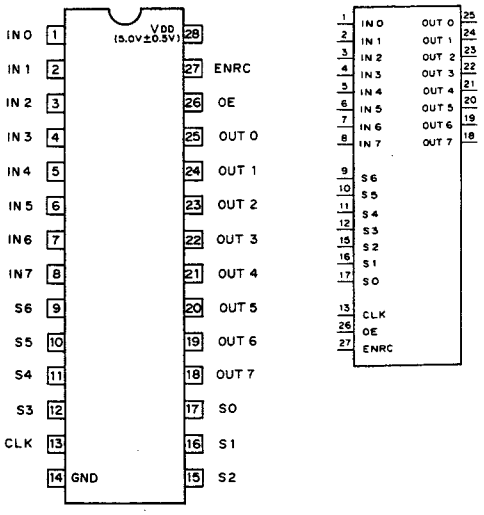

CLK ; CLOCK INPUT
ENRC ; CIRCULATION CONTROL
IN0-IN7 ; DATA INPUT
OE ; OUTPUT ENABLE
OUT0-OUT7 ; DATA OUTPUT
S0-S6 ; REGISTER LENGTH SELECT

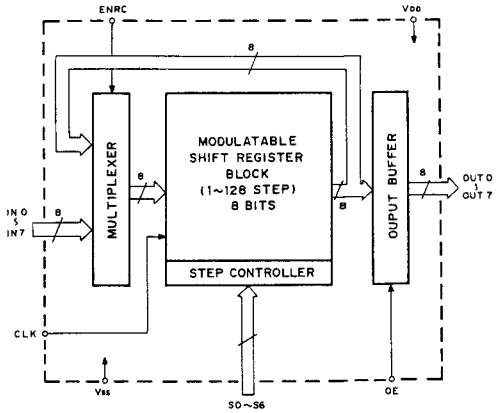

MODULATABLE SHIFT REGISTER BLOCK

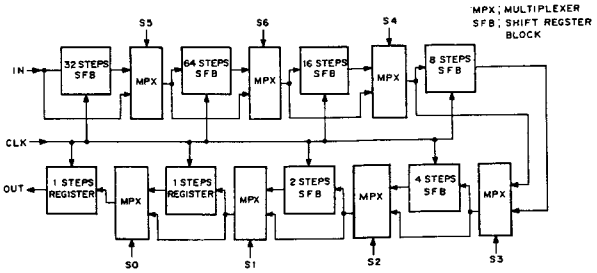

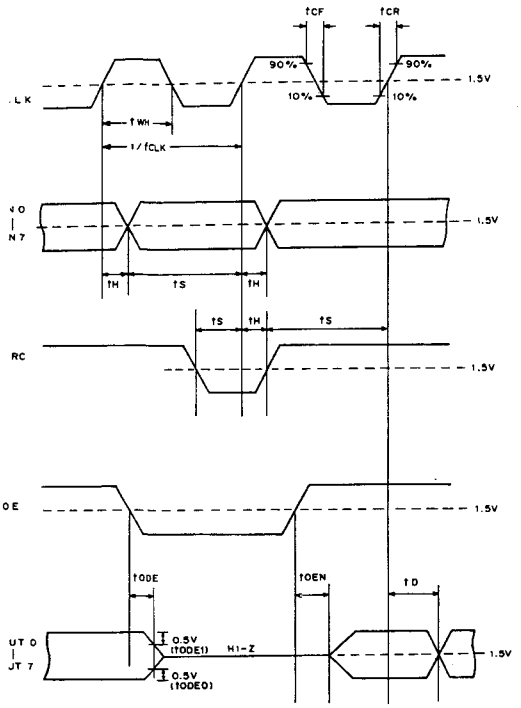

SN74ALS10AN (TI)
SN74LS10N (TI)

TTL 3-INPUT POSITIVE NAND GATE
– TOP VIEW –

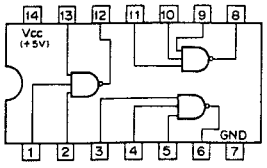

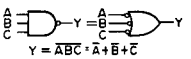

A	B	C	Y
0	0	0	1
0	0	1	1
0	1	0	1
0	1	1	1
1	0	0	1
1	0	1	1
1	1	0	1
1	1	1	0

0 : LOW LEVEL
1 : HIGH LEVEL

SN74ALS11AN (TI)

TTL 3-INPUT POSITIVE-AND GATE
– TOP VIEW –

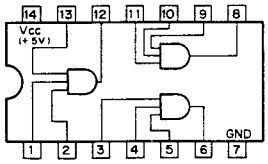

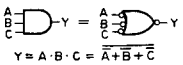

A	B	C	Y
0	0	0	0
0	0	1	0
0	1	0	0
0	1	1	0
1	0	0	0
1	0	1	0
1	1	0	0
1	1	1	1

0;LOW LEVEL
1;HIGH LEVEL

SN74ALS04BN (TI)
SN74LS04N (TI)

TL INVERTER
TOP VIEW –

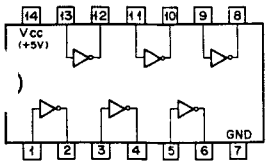

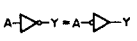

A	Y
0	1
1	0

0;LOW LEVEL
1;HIGH LEVEL

SN74ALS139NS (TI) FLAT PACKAGE
SN74LS139AN (TI)

TTL 2-TO-4-LINE DECODER/DEMULTIPLEXER
– TOP VIEW –

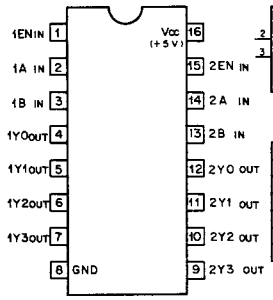

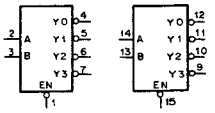

INPUTS			OUTPUTS			
EN	B	A	Y3	Y2	Y1	Y0
0	0	0	1	1	1	0
0	0	1	1	1	0	1
0	1	0	1	0	1	1
0	1	1	0	1	1	1
1	X	X	1	1	1	1

0 ; LOW LEVEL
1 ; HIGH LEVEL
X ; DON'T CARE

SN74ALS138N (TI)
N74LS138N (TI)

TL 3-TO-8-LINE DECODER/DEMULTIPLEXER
– TOP VIEW –

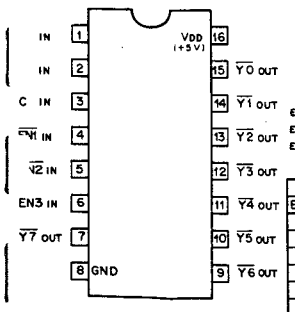

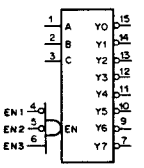

INPUTS				OUTPUTS							
EN	C	B	A	Y7	Y6	Y5	Y4	Y3	Y2	Y1	Y0
0	X	X	X	1	1	1	1	1	1	1	1
1	0	0	0	1	1	1	1	1	1	1	0
1	0	0	1	1	1	1	1	1	1	0	1
1	0	1	0	1	1	1	1	1	0	1	1
1	0	1	1	1	1	1	1	0	1	1	1
1	1	0	0	1	1	1	0	1	1	1	1
1	1	0	1	1	1	0	1	1	1	1	1
1	1	1	0	1	0	1	1	1	1	1	1
1	1	1	1	0	1	1	1	1	1	1	1

EN = EN1 · EN2 · EN3

0 ; LOW LEVEL
1 ; HIGH LEVEL
X ; DON'T CARE

SN74ALS151N (TI)

TTL 8-LINE-TO-1-LINE DATA SELECTOR/MULTIPLEXER
– TOP VIEW –

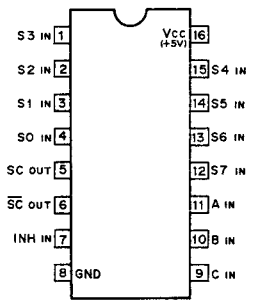

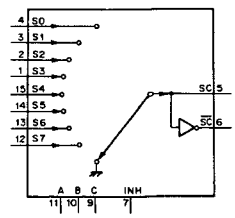

CONTROL INPUTS				ON CHANNEL
INH	C	B	A	
0	0	0	0	0
0	0	0	1	1
0	0	1	0	2
0	0	1	1	3
0	1	0	0	4
0	1	0	1	5
0	1	1	0	6
0	1	1	1	7
1	X	X	X	GND

0;LOW LEVEL
1;HIGH LEVEL
X;DON'T CARE

SN74ALS153N (TI)

TTL 4-LINE-TO-1-LINE DATA SELECTOR/MULTIPLEXER
- TOP VIEW -

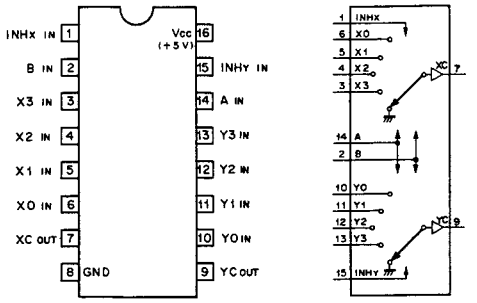

CONTROL IN			ON CHANNEL
INH	B	A	
0	0	0	0
0	0	1	1
0	1	0	2
0	1	1	3
1	X	X	GND

0 : LOW LEVEL
1 : HIGH LEVEL
X : DON'T CARE

SN74ALS157AN (TI)

TTL QUAD 2-LINE-TO-1-LINE DATA SELECTORS/MULTIPLEXERS
- TOP VIEW -

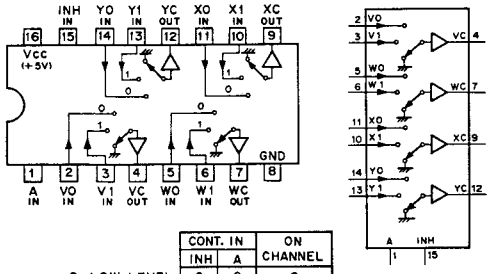

CONT. IN		ON CHANNEL
INH	A	
0	0	0
0	1	1
1	X	GND

0 ; LOW LEVEL
1 ; HIGH LEVEL
X ; DON'T CARE

SN74ALS174N (TI)
SN74LS174N (TI)

TTL HEX D-TYPE FLIP-FLOPS WITH DIRECT RESET
- TOP VIEW -

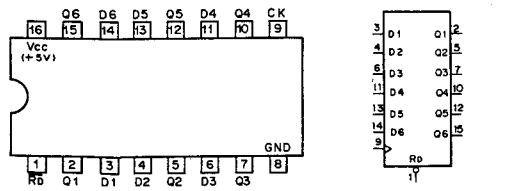

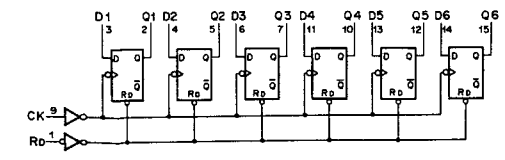

EACH FLIP-FLOP

INPUTS			OUT
RD	CK	D	Q
0	X	X	0
1	↓	0	0
1	↓	1	1
X	0	X	Q_0

0 ;LOW LEVEL
1 ;HIGH LEVEL
X ;DON'T CARE
Q_0;NO CHANGE

SN74ALS161BN (TI)

TTL PRESETTABLE SYNCHRONOUS 4-BIT BINARY COUNTER
- TOP VIEW -

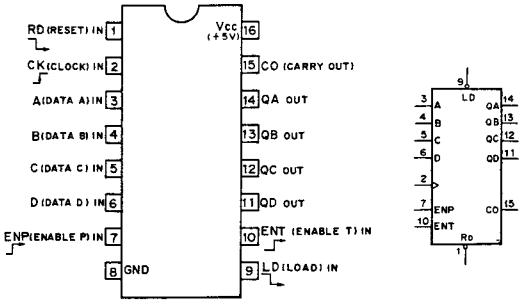

MODE SELECTION

CONTROL INPUTS				MODE
RD	LD	ENP	ENT	
0	X	X	X	RESET (ASYNCHRONOUS)
1	0	X	X	PRESET (SYNCHRONOUS)
1	1	0	X	NO COUNT
1	1	X	0	NO COUNT
1	1	1	1	COUNT

0; LOW LEVEL
1; HIGH LEVEL
X; DON'T CARE

CARRY OUTPUT "CO"

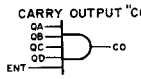

CO IS HIGH WHEN ENT INPUT IS HIGH AND COUNT IS "15".

COUNT SEQUENCE

COUNT	OUTPUTS			
	QD	QC	QB	QA
0	0	0	0	0
1	0	0	0	1
2	0	0	1	0
3	0	0	1	1
4	0	1	0	0
5	0	1	0	1
6	0	1	1	0
7	0	1	1	1
8	1	0	0	0
9	1	0	0	1
10	1	0	1	0
11	1	0	1	1
12	1	1	0	0
13	1	1	0	1
14	1	1	1	0
15	1	1	1	1

SN74ALS175N (TI)
SN74LS175N (TI)

TTL D-TYPE FLIP-FLOP WITH CLEAR
- TOP VIEW -

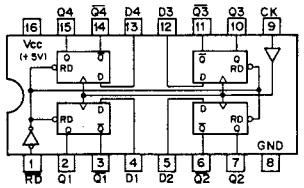

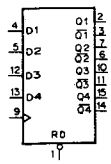

RD	CK	D	Q	$\overline{Q}$
0	X	X	0	1
1	↑	1	1	0
1	↑	0	0	1
1	0	X	Q_0	$\overline{Q_0}$

0; LOW LEVEL
1; HIGH LEVEL
X; DON'T CARE

SN74ALS21AN (TI)
SN74LS21N (TI)

TTL 4-INPUT POSITIVE AND GATE
- TOP VIEW -

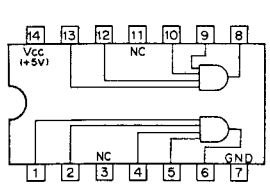

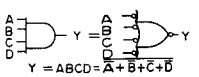

A	B	C	D	Y
0	0	0	0	0
0	0	0	1	0
0	0	1	0	0
0	0	1	1	0
0	1	0	0	0
⋮	⋮	⋮	⋮	⋮
1	1	0	1	0
1	1	1	0	0
1	1	1	1	1

0 ; LOW LEVEL
1 ; HIGH LEVEL

J74ALS244BN (TI)
J74ALS244BNS (TI) FLAT PACKAGE
SN74LS244N (TI)

TTL 3-STATE SCHMITT TRIGGER BUFFER/DRIVER
TOP VIEW –

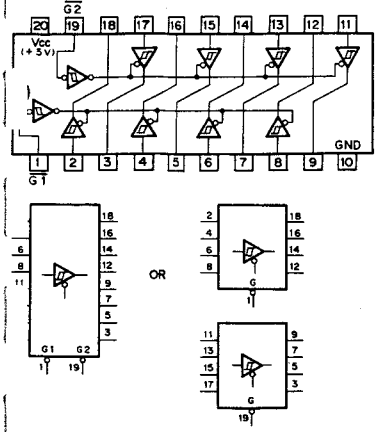

G	A	Y
0	0	0
0	1	1
1	X	HI-Z

0; LOW LEVEL
1; HIGH LEVEL
X; DON'T CARE
HI-Z; HIGH IMPEDANCE

J74ALS374AN (TI)
J74LS374N (TI)

'L 3-STATE OUTPUTS OCTAL D-TYPE FLIP-FLOP
– TOP VIEW –

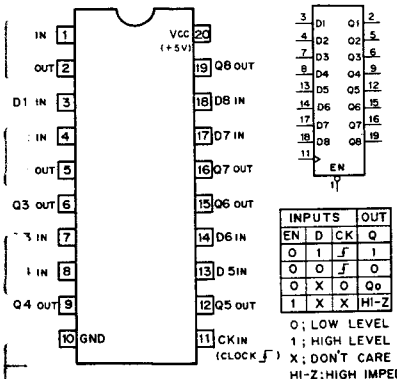

INPUTS			OUT
EN	D	CK	Q
0	1	∫	1
0	0	∫	0
0	X	0	Qo
1	X	X	HI-Z

0; LOW LEVEL
1; HIGH LEVEL
X; DON'T CARE
HI-Z; HIGH IMPEDANCE

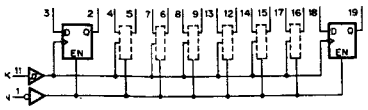

J74ALS574BNS (TI) FLAT PACKAGE

'L 3-STATE D-TYPE EDGE-TRIGGERED FLIP-FLOP
– TOP VIEW –

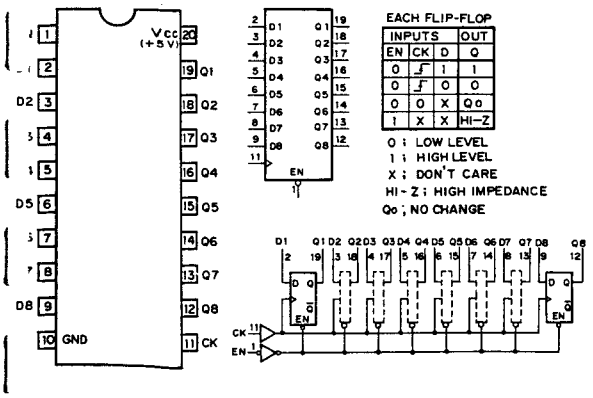

INPUTS			OUT
EN	CK	D	Q
0	∫	1	1
0	∫	0	0
0	0	X	Qo
1	X	X	HI-Z

EACH FLIP-FLOP
0 ; LOW LEVEL
1 ; HIGH LEVEL
X ; DON'T CARE
HI-Z ; HIGH IMPEDANCE
Qo ; NO CHANGE

SN74ALS74AN (TI)
SN74LS74AN (TI)
SN74LS74ANS (TI) FLAT PACKAGE

TTL D-TYPE FLIP FLOP WITH DIRECT SET/RESET
– TOP VIEW –

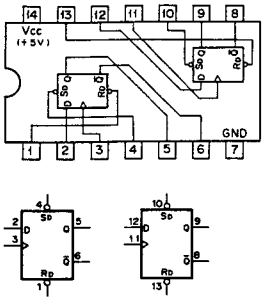

INPUTS				OUTPUTS	
$\overline{Sp}$	$\overline{Rp}$	CK	D	Qn+1	$\overline{Qn+1}$
0	1	X	X	1	0
1	0	X	X	0	1
0	0	X	X	1*	1*
1	1	∫	1	1	0
1	1	∫	0	0	1
1	1	0	X	Qn	$\overline{Qn}$

0; LOW LEVEL
1; HIGH LEVEL
X; DON'T CARE
1*; NONSTABLE

SN74HC00ANS (TI) FLAT PACKAGE

C-MOS QUAD 2-INPUT NAND GATES
– TOP VIEW –

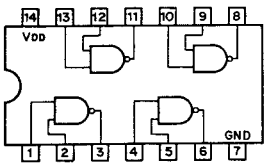

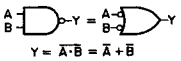

A	B	Y
0	0	1
0	1	1
1	0	1
1	1	0

0; LOW LEVEL
1; HIGH LEVEL

NOTE :

TYPE	VDD
TC74AC00 TYPE	+2 to +5.5V
MC74HCT00N	+5V
74ACT00 TYPE	+4.5 to +5.5V
OTHER TYPES	+2 to +6V

SN74HC02ANS (TI) FLAT PACKAGE

C-MOS QUAD 2-INPUT NOR GATES
– TOP VIEW –

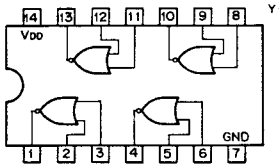

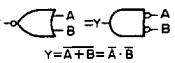

A	B	Y
0	0	1
0	1	0
1	0	0
1	1	0

0:LOW LEVEL
1:HIGH LEVEL

NOTE :

TYPE	VDD
TC74AC02F	+2 to +5.5V
74ACT02SJ TC74ACT02F	+4.5 to +5.5V
OTHER TYPES	+2 to +6V

SN74HC03NS (TI) FLAT PACKAGE

C-MOS 2-INPUT POSITIVE-NAND GATE WITH OPEN-DRAIN
– TOP VIEW –

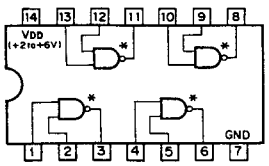

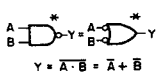

A	B	Y
0	0	HI-Z
0	1	HI-Z

0;LOW LEVEL

SN74HC04ANS (TI) FLAT PACKAGE

C-MOS HEX INVERTERS
– TOP VIEW –

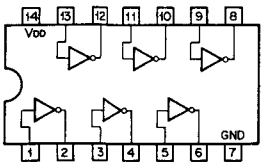

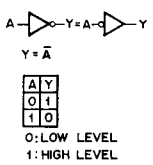

NOTE :

TYPE	VDD
74HCT04 TYPE	+5V
TC74AC04 TYPE	+2 to +5.5V
74ACT04 TYPE	+4.5 to +5.5V
OTHER TYPES	+2 to +6V

SN74HC10ANS (TI) FLAT PACKAGE

C-MOS 3-INPUT NAND GATE
– TOP VIEW –

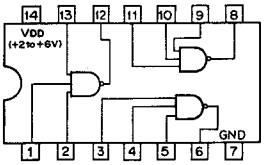

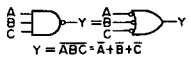

A	B	C	Y
0	0	0	1
0	0	1	1
0	1	0	1
0	1	1	1
1	0	0	1
1	0	1	1
1	1	0	1
1	1	1	0

0 : LOW LEVEL
1 : HIGH LEVEL

SN74HC132ANS (TI) FLAT PACKAGE

C-MOS 2-INPUT NAND SCHMITT TRIGGER
– TOP VIEW –

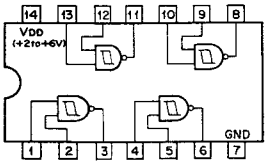

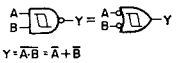

A	B	Y
0	0	1
0	1	1
1	0	1
1	1	0

0 ; LOW LEVEL
1 ; HIGH LEVEL

SN74HC138ANS (TI) FLAT PACKAGE

C-MOS 3-TO-8 LINE DECODER/DEMULTIPLEXER
– TOP VIEW –

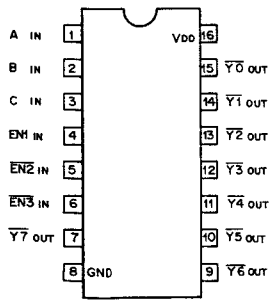

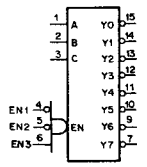

NOTE :

TYPE	VDD
74HCT138 TYPE	+5V
74ACT138 TYPE	+4.5 to +5.5V
TC74AC138 TYPE	+2 to +5.5V
OTHER TYPES	+2 to +6V

INPUTS				OUTPUTS							
EN	C	B	A	Y7	Y6	Y5	Y4	Y3	Y2	Y1	Y0
0	X	X	X	1	1	1	1	1	1	1	1
1	0	0	0	1	1	1	1	1	1	1	0
1	0	0	1	1	1	1	1	1	1	0	1
1	0	1	0	1	1	1	1	1	0	1	1
1	0	1	1	1	1	1	1	0	1	1	1
1	1	0	0	1	1	1	0	1	1	1	1
1	1	0	1	1	1	0	1	1	1	1	1
1	1	1	0	1	0	1	1	1	1	1	1
1	1	1	1	0	1	1	1	1	1	1	1

EN = $\overline{EN1} \cdot \overline{EN2} \cdot EN3$

0 ; LOW LEVEL
1 ; HIGH LEVEL
X ; DON'T CARE

SN74HC163ANS (TI) FLAT PACKAGE

C-MOS PRESETTABLE SYNCHRONOUS 4-BIT BINARY COUNTER
– TOP VIEW –

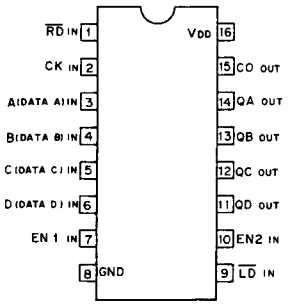

MODE SELECTION

CONTROL INPUTS				MODE
RD	LD	EN1	EN2	
0	X	X	X	RESET (SYNCHRONOUS)
1	0	X	X	PRESET (SYNCHRONOUS)
1	1	0	X	NO COUNT
1	1	X	0	NO COUNT
1	1	1	1	COUNT

CARRY OUTPUT "CO"

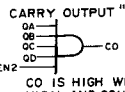

CO IS HIGH WHEN EN2 INPUT IS HIGH AND COUNT IS "15".

NOTE :

TYPE	VDD
74ACT163 TYPE	+ 4.5 to + 5.5V
TC74AC163 TYPE	+ 2 to + 5.5V
OTHER TYPES	+ 2 to + 6V

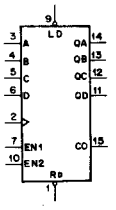

COUNT SEQUENCE

COUNT	OUTPUTS			
	QD	QC	QB	QA
0	0	0	0	0
1	0	0	0	1
2	0	0	1	0
3	0	0	1	1
4	0	1	0	0
5	0	1	0	1
6	0	1	1	0
7	0	1	1	1
8	1	0	0	0
9	1	0	0	1
10	1	0	1	0
11	1	0	1	1
12	1	1	0	0
13	1	1	0	1
14	1	1	1	0
15	1	1	1	1

SN74HC164ANS (TI) FLAT PACKAGE

C-MOS 8-BIT SERIAL-IN/PARALLEL-OUT SHIFT REGISTER
– TOP VIEW –

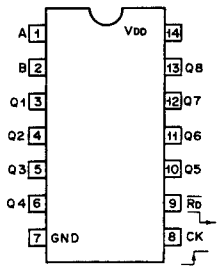

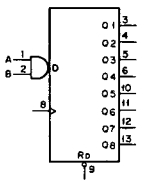

INPUTS				OUTPUTS			
RD	CK	A	B	Q1	Q2	----	Q8
0	X	X	X	0	0	0	0
1	0	X	X	Q1o	Q2o	----	Q8o
1	↑	1	1	1	Q1n	----	Q7n
1	↑	0	X	0	Q1n	----	Q7n
1	↑	X	0	0	Q1n	----	Q7n

0;LOW LEVEL
1;HIGH LEVEL
X;DON'T CARE

NOTE :

TYPE	VDD
TC74AC164 TYPE	+2 to +5.5V
OTHER TYPES	+2 to +6V

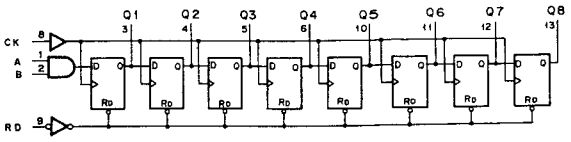

J74HC175ANS (TI) FLAT PACKAGE

C-MOS QUAD D-TYPE FLIP-FLOPS WITH RESET

– TOP VIEW –

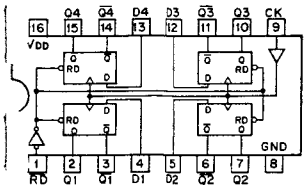

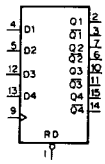

RD	CK	D	Q	$\bar{Q}$
0	X	X	0	1
1	↑	1	1	0
1	↑	0	0	1
1	0	X	Q_0	$\bar{Q}_0$

0 ; LOW LEVEL
1 ; HIGH LEVEL
X ; DON'T CARE
Q_0 ; NO CHANGE
$\bar{Q}_0$; NO CHANGE

OTE:

TYPE	VDD
TC74AC175F	+2 to +5.5V
74ACT175 TYPE	+4.5 to +5.5V
OTHER TYPES	+2 to +6V

SN74HC20ANS (TI) FLAT PACKAGE

C-MOS 4-INPUT POSITIVE-NAND GATE

– TOP VIEW –

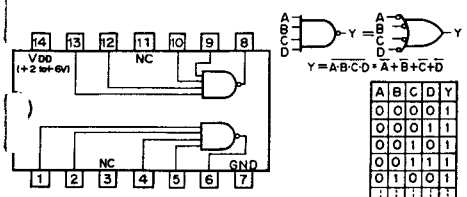

A	B	C	D	Y
0	0	0	0	1
0	0	0	1	1
0	0	1	0	1
0	0	1	1	1
0	1	0	0	1
:	:	:	:	:
1	1	0	1	1
1	1	1	0	1
1	1	1	1	0

0 ; LOW LEVEL
1 ; HIGH LEVEL

TE :

TYPE	VDD
TC74AC20	+2V to +5.5V
OTHER TYPES	+2V to +6V

J74HC21ANS (TI) FLAT PACKAGE

C-MOS DUAL 4-INPUT POSITIVE AND GATE

– TOP VIEW –

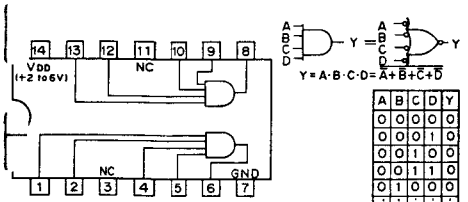

A	B	C	D	Y
0	0	0	0	0
0	0	0	1	0
0	0	1	0	0
0	0	1	1	0
0	1	0	0	0
:	:	:	:	:
1	1	0	1	0
1	1	1	0	0
1	1	1	1	1

0 ; LOW LEVEL
1 ; HIGH LEVEL

J74HC32ANS (TI) FLAT PACKAGE

C-MOS QUAD 2-INPUT OR GATES

– TOP VIEW –

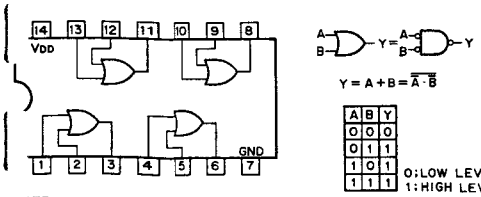

A	B	Y
0	0	0
0	1	1
1	0	1
1	1	1

0 ; LOW LEVEL
1 ; HIGH LEVEL

NOTE :

TYPE	VDD
C74AC32 TYPE	+2 to +5.5V
OTHER TYPES	+2 to +6V

SN74HC244ANS (TI) FLAT PACKAGE

C-MOS BUS BUFFER WITH 3-STATE OUTPUTS

– TOP VIEW –

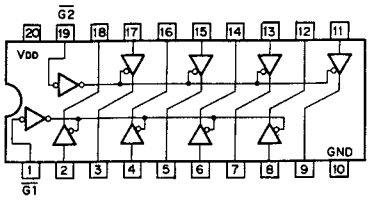

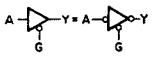

G	A	Y
0	0	0
0	1	1
1	X	HI-Z

0 ; LOW LEVEL
1 ; HIGH LEVEL
X ; DON'T CARE
HI-Z ; HIGH IMPEDANCE

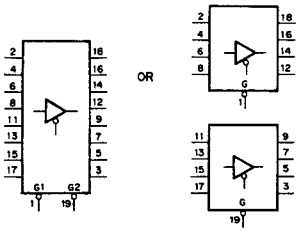

NOTE :

TYPE	VDD
AC HC 40H	+2 to +6V
ACT HCT	+5V

SN74HC245ANS (TI) FLAT PACKAGE

C-MOS BILATERAL BUS TRANSCEIVERS WITH 3-STATE OUTPUTS

– TOP VIEW –

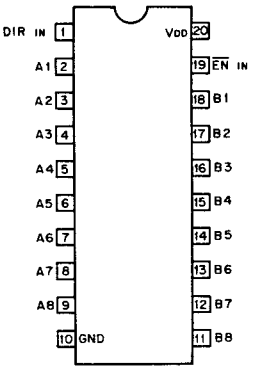

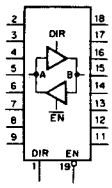

EN	DIR	OPERATION
0	0	B to A
0	1	A to B
1	X	HI-Z

0 ; LOW LEVEL
1 ; HIGH LEVEL
X ; DON'T CARE
HI-Z ; HIGH IMPEDANCE

NOTE :

TYPE	VDD
AC HC	+2 to +6V
ACT HCT	+5V
TC74AC245F TC74AC245P	+2 to +5.5V

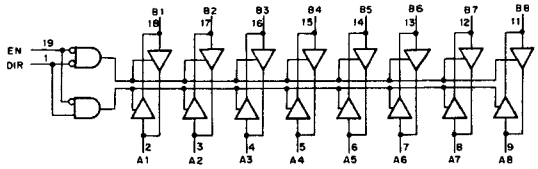

SN74HC375ANS (TI) FLAT PACKAGE

C-MOS 4-BIT BISTABLE LATCHES

– TOP VIEW –

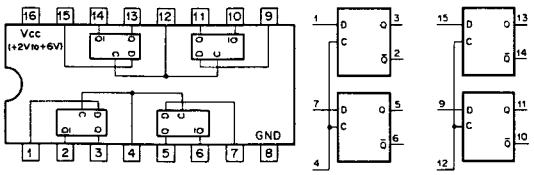

D	C	Q	$\bar{Q}$
0	1	0	1
1	1	1	0
X	0	Q_0	$\bar{Q}_0$

0 ; LOW LEVEL
1 ; HIGH LEVEL
X ; DON'T CARE

SN74HC4075ANS (TI) FLAT PACKAGE

C-MOS 3-INPUT OR GATE
– TOP VIEW –

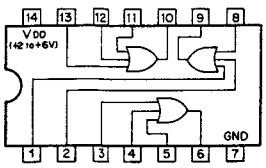

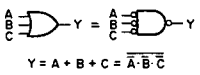

C	B	A	Y
0	0	0	0
X	X	1	1
X	1	X	1
1	X	X	1

0 ; LOW LEVEL
1 ; HIGH LEVEL
X ; DON'T CARE

SN74HC573BNS (TI) FLAT PACKAGE

C-MOS 3-STATE OUTPUTS OCTAL LATCHES
– TOP VIEW –

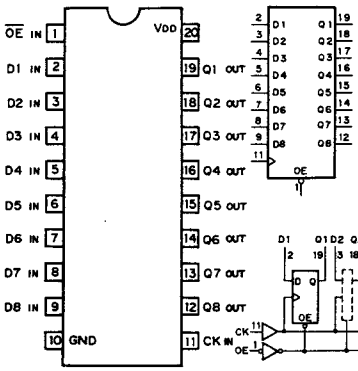

INPUTS			OUT
OE	CK	D	Q
0	1	1	1
0	1	0	0
0	0	X	Q_0
1	X	X	HI-Z

0 ; LOW LEVEL
1 ; HIGH LEVEL
X ; DON'T CARE
HI-Z ; HIGH IMPEDANCE
Q_0 ; NO CHANGE

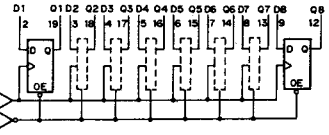

NOTE :

TYPE	VDD
AC	+2 to +6V
HC	
ACT	+5V
HCT	
TC74AC573	+2 to +5.5V

SN74HC574ANS (TI) FLAT PACKAGE
SN74HCT574ANS (TI) FLAT PACKAGE

C-MOS 3-STATE D-TYPE EDGE-TRIGGERED FLIP-FLOP
– TOP VIEW –

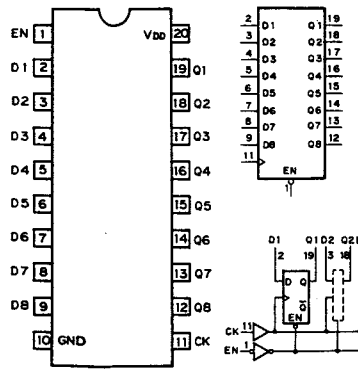

EACH FLIP-FLOP

INPUTS			OUT
EN	CK	D	Q
0	↑	1	1
0	↑	0	0
0	↓	X	Q_0
1	X	X	HI-Z

0 ; LOW LEVEL
1 ; HIGH LEVEL
X ; DON'T CARE
HI-Z ; HIGH IMPEDANCE
Q_0 ; NO CHANGE

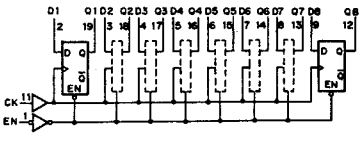

NOTE :

TYPE	VDD
74AC/74HC	+2 to +6V
74ACT/74HCT	+5V
TC74AC574F	+2 to +5.5V

SN74HC74ANS (TI) FLAT PACKAGE

C-MOS DUAL D-TYPE FLIP-FLOPS WITH DIRECT SET/RESET
– TOP VIEW –

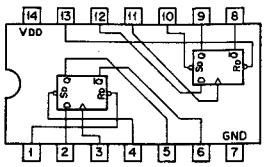

INPUTS				OUTPUTS	
$\overline{S_D}$	$\overline{R_D}$	CK	D	Qn+1	$\overline{Qn+1}$
0	1	X	X	1	0
1	0	X	X	0	1
0	0	X	X	1	1
1	1	↑	1	1	0
1	1	↑	0	0	1
1	1	0	X	Qn	$\overline{Qn}$

0 ; LOW LEVEL
1 ; HIGH LEVEL
X ; DON'T CARE

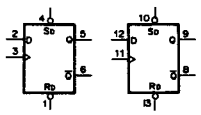

NOTE :

TYPE	VDD
TC74HCT74AF	+5V
TC74AC74 TYPE	+2 to +5.5V
74ACT74 TYPE	+4.5 to +5.5V
OTHER TYPES	+2 to +6V

SN74LS14NS (TI) FLAT PACKAGE

TTL SCHMITT TRIGGER INVERTER
– TOP VIEW –

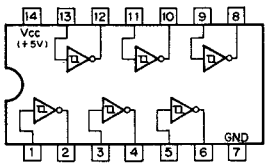

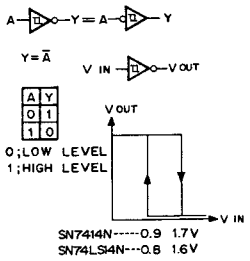

A	Y
0	1
1	0

0 ; LOW LEVEL
1 ; HIGH LEVEL

SN7414N-----0.9 1.7V
SN74LS14N---0.8 1.6V

SN74LS164N (TI)

TTL 8-BIT PARALLEL-OUT SERIAL SHIFT REGISTER
– TOP VIEW –

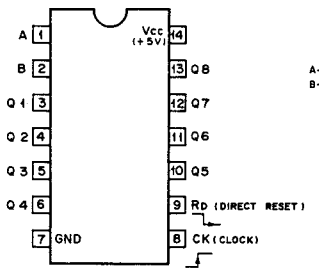

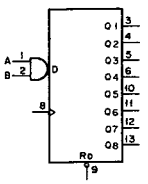

INPUTS				OUTPUTS				
RD	CK	A	B	Q1	Q2	----	Q8	
0	X	X	X	0	0	0	0	
1	0	X	X	$Q1_0$	$Q2_0$	----	$Q8_0$	
1	↑	1	1	1	$Q1_n$	----	$Q7_n$	0;LOW LEVEL
1	↑	0	X	0	$Q1_n$	----	$Q7_n$	1;HIGH LEVEL
1	↑	X	0	0	$Q1_n$	----	$Q7_n$	X;DON'T CARE

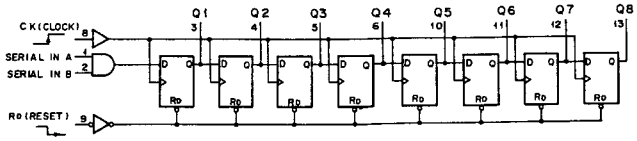

N74LS194AN (TI)

TL 4-BIT BIDIRECTIONAL UNIVERSAL SHIFT RESISTER

– TOP VIEW –

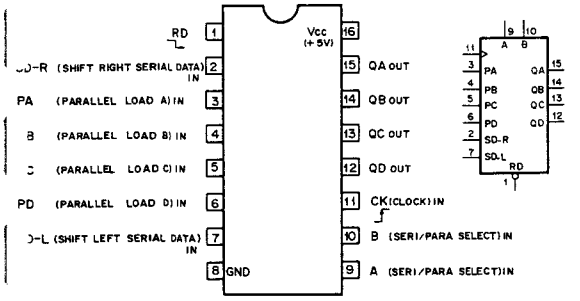

INPUTS									OUTPUTS			
RD	MODE B	MODE A	CK	SERIAL SD-L	SERIAL SD-R	PARALLEL PA	PARALLEL PB	PARALLEL PC	PARALLEL PD	QA	QB	QC	QD
0	X	X	X	X	X	X	X	X	X	0	0	0	0
1	X	X	0	X	X	X	X	X	X	QAo	QBo	QCo	QDo
1	1	1	↑	X	X	A	B	C	D	A	B	C	D
1	0	1	↑	X	1	X	X	X	X	1	QAn	QBn	QCn
1	0	1	↑	X	0	X	X	X	X	0	QAn	QBn	QCn
1	1	0	↑	1	X	X	X	X	X	QBn	QCn	QDn	1
1	1	0	↑	0	X	X	X	X	X	QBn	QCn	QDn	0
1	0	0	X	X	X	X	X	X	X	QAo	QBo	QCo	QDo

LOAD
QA→QD
QA→QD

A,B,C,D = THE LEVEL OF STEADY-STATE INPUT AT PA,PB,PC, OR PD, RESPECTIVELY.
QAo,QBo,QCo,QDo = THE LEVEL OF QA,QB,QC OR QD RESPECTIVELY, BEFORE THE INDICATED STEADY-STATE INPUT CONDITIONS WERE ESTABLISHED
QAn,QBn,QCn,QDn = THE LEVEL OF QA,QB,QC OR QD RESPECTIVELY, BEFORE MOST RECENT ↑ TRANSITION OF THE CLOCK.
0 = LOW LEVEL 1 = HIGH LEVEL X = DON'T CARE

N74LS20N (TI)

TL 4-INPUT POSITIVE NAND GATE

– TOP VIEW –

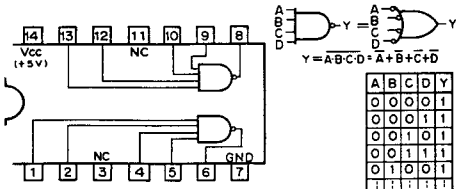

A	B	C	D	Y
0	0	0	0	1
0	0	0	1	1
0	0	1	0	1
0	0	1	1	1
0	1	0	0	1
:	:	:	:	:
1	1	0	1	1
1	1	1	0	1
1	1	1	1	0

0 ; LOW LEVEL
1 ; HIGH LEVEL

N74LS221NS (TI) FLAT PACKAGE

TL MONOSTABLE MULTIVIBRATOR WITH SCHMITT TRIGGER INPUT

– TOP VIEW –

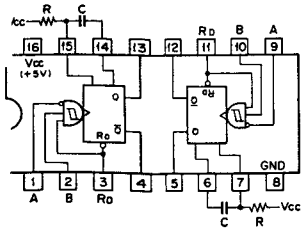

INPUTS			OUTPUTS	
RD	A	B	Q	$\overline{Q}$
0	X	X	0	1
X	1	X	0	1
X	X	0	0	1
1	0	↑	⊓	⊔
1	↓	1	⊓	⊔
↑	0	1	⊓	⊔

0 ; LOW LEVEL
1 ; HIGH LEVEL
X ; DON'T CARE

OUTPUT PULSE WIDTH = 0.7CR

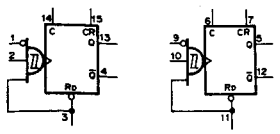

SN74LS245N (TI)

TTL BILATERAL SCHMITT TRIGGER BUS TRANSCEIVERS WITH 3-STATE OUTPUTS

– TOP VIEW –

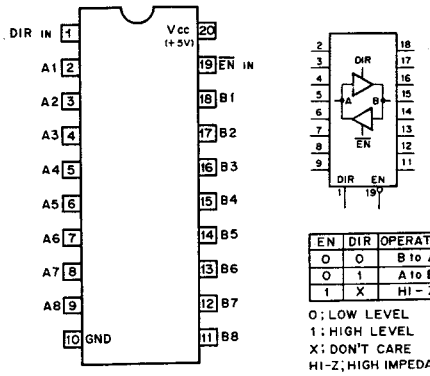

EN	DIR	OPERATION
0	0	B to A
0	1	A to B
1	X	HI-Z

0 ; LOW LEVEL
1 ; HIGH LEVEL
X ; DON'T CARE
HI-Z ; HIGH IMPEDANCE

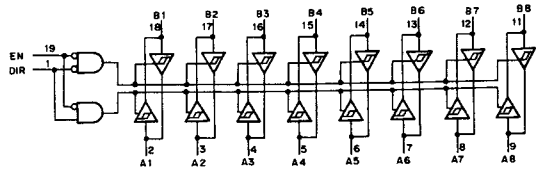

SN74LS247NS (TI) FLAT PACKAGE

TTL BCD-TO-SEVEN-SEGMENT DECODER/DRIVER (OPEN COLLECTOR OUTPUT)

– TOP VIEW –

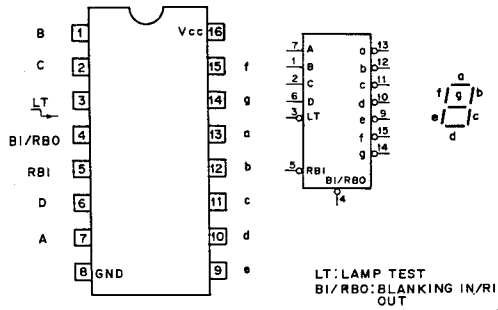

LT : LAMP TEST
BI/RBO : BLANKING IN/RIPPLE BLANKING OUT
RBI : RIPPLE BLANKING IN

INPUTS						BI/RBO	OUTPUTS							DISPLAY	DECIMAL
LT	RBI	D	C	B	A		a	b	c	d	e	f	g	(HEXADECIMAL)	
1	0	0	0	0	0	1	0	0	0	0	0	0	1	0	0
1	X	0	0	0	1	1	1	0	0	1	1	1	1	1	1
1	X	0	0	1	0	1	0	0	1	0	0	1	0	2	2
1	X	0	0	1	1	1	0	0	0	0	1	1	0	3	3
1	X	0	1	0	0	1	1	0	0	1	1	0	0	4	4
1	X	0	1	0	1	1	0	1	0	0	1	0	0	5	5
1	X	0	1	1	0	1	0	1	0	0	0	0	0	6	6
1	X	0	1	1	1	1	0	0	0	1	1	1	1	7	7
1	X	1	0	0	0	1	0	0	0	0	0	0	0	8	8
1	X	1	0	0	1	1	0	0	0	0	1	0	0	9	9
1	X	1	0	1	0	1	1	1	1	0	0	1	0	C	10
1	X	1	0	1	1	1	1	1	0	0	1	1	0	J	11
1	X	1	1	0	0	1	1	0	1	1	1	0	0	L	12
1	X	1	1	0	1	1	0	1	1	0	1	0	0	E	13
1	X	1	1	1	0	1	1	1	1	0	0	0	0	F	14
1	X	1	1	1	1	1	1	1	1	1	1	1	1	BLANK	15
X	X	X	X	X	X	0	1	1	1	1	1	1	1	BLANK	15
1	0	0	0	0	0	0*	1	1	1	1	1	1	1	BLANK	15
0	X	X	X	X	X	1	0	0	0	0	0	0	0	8	8
1	1	0	0	0	0	1	1	1	1	1	1	1	1	BLANK	15

* When RBI and inputs A,B,C, and D are at a low "0" level with the LT input high "H", all segment outputs go off ("1") and the RBO goes to a low "0" level (response condition).

SN74LS283NS (TI) FLAT PACKAGE

TTL 4-BIT BINARY FULL ADDER

- TOP VIEW -

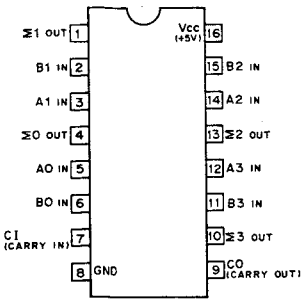

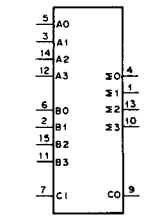

2^4	2^3	2^2	2^1	2^0	DIGIT
				CI	CARRY IN
	A3	A2	A1	A0	DATA A IN
+	B3	B2	B1	B0	DATA B IN
CO	Σ3	Σ2	Σ1	Σ0	CARRY&SUM OUT

EX.

				1	CI
	1	0	1	1	A
+	1	0	1	0	B
1	0	1	1	0	OUTPUTS
CO	Σ3	Σ2	Σ1	Σ0	

SN74LS373N (TI)

TTL 3-STATE OUTPUTS OCTAL LATCHES

- TOP VIEW -

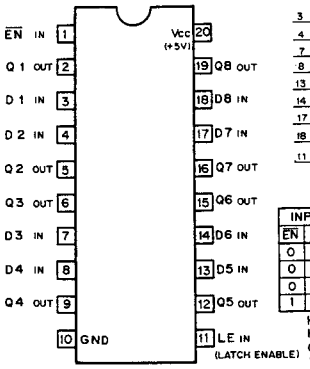

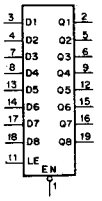

INPUTS			OUT
EN	D	LE	Q
0	1	1	1
0	0	1	0
0	X	0	Qo
1	X	X	HI-Z

HI-Z; HIGH IMPEDANCE
0 ; LOW LEVEL
1 ; HIGH LEVEL
X ; DON'T CARE

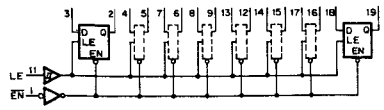

TA7805S (TOSHIBA) + 5V

POSITIVE VOLTAGE REGULATOR (0.5A)

- SIDE VIEW -

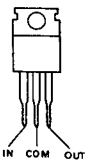

SN74LS375N (TI)

TTL BISTABLE LATCH

- TOP VIEW -

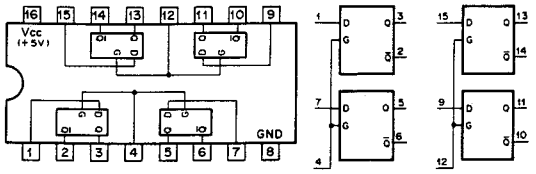

D	G	Q	Q̄
0	1	0	1
1	1	1	0
X	0	Qo	Q̄o

0 ; LOW LEVEL
1 ; HIGH LEVEL
X ; DON'T CARE

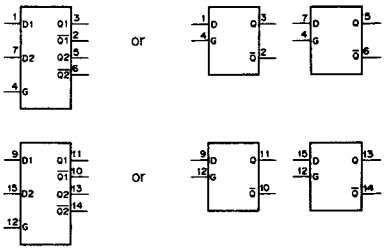

SN74LS684N (TI)

TTL 8-BIT MAGNITUDE COMPARATOR
WITH TOTEM-POLE OUTPUTS

- TOP VIEW -

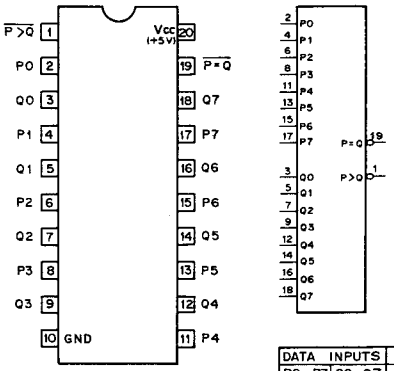

DATA INPUTS		OUTPUTS	
P0-P7	Q0-Q7	P=Q	P>Q
P=Q		0	1
P>Q		1	0
P<Q		1	1

1 ; HIGH LEVEL
0 ; LOW LEVEL

INPUT/OUTPUT CONFIGURATION

TYPE	INPUT	OUTPUT
LS682	WITH 20K-OHM	TOTEM-POLE
LS683	PULL UP	OPEN-COLLECTOR
LS684	WITHOUT	TOTEM-POLE
LS685	PULL UP	OPEN-COLLECTOR

TC4584BF (TOSHIBA) FLAT PACKAGE

C-MOS SCHMITT TRIGGER INVERTER

- TOP VIEW -

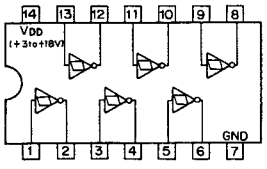

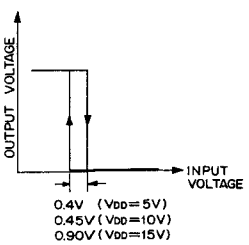

:4S66F (TOSHIBA)

C-MOS BILATERAL ANALOG SWITCH

– TOP VIEW –

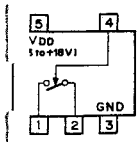

CONTROL	SWITCH
0	OFF
1	ON

0; LOW LEVEL
1; HIGH LEVEL

:74HC191AF (TOSHIBA) FLAT PACKAGE

C-MOS PRESETTABLE SYNCHRONOUS 4-BIT BINARY UP/DOWN COUNTER

– TOP VIEW –

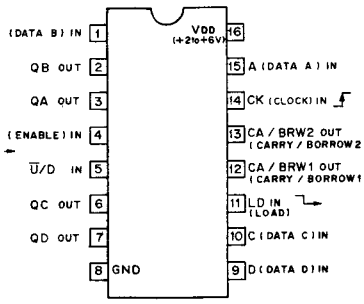

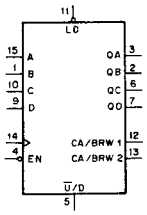

MODE SELECTION

CONTROL INPUTS			MODE
LD	EN	U/D	
0	X	X	PRESET (ASYNCHRONOUS)
1	1	X	NO COUNT
1	0	0	UP COUNT
1	0	1	DOWN COUNT

0; LOW LEVEL
1; HIGH LEVEL
X; DON'T CARE.

COUNT SEQUENCE

COUNT	OUTPUTS			
	QD	QC	QB	QA
0	0	0	0	0
1	0	0	0	1
2	0	0	1	0
3	0	0	1	1
4	0	1	0	0
5	0	1	0	1
6	0	1	1	0
7	0	1	1	1
8	1	0	0	0
9	1	0	0	1
10	1	0	1	0
11	1	0	1	1
12	1	1	0	0
13	1	1	0	1
14	1	1	1	0
15	1	1	1	1

UP COUNT
DOWN COUNT

CA/BRW OUTPUTS

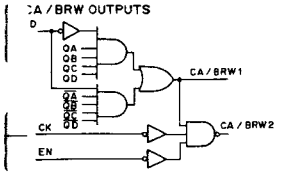

CA/BRW1 OUTPUT IS HIGH WHEN COUNT IS "15" AT UP-COUNT OR WHEN COUNT IS "0" AT DOWN COUNT.

CA/BRW2 OUTPUT IS LOW WHEN BOTH THE CLOCK AND EN INPUTS ARE LOW AND CA/BRW1 OUTPUT IS HIGH.

:74HC221AF (TOSHIBA) FLAT PACKAGE

C-MOS MONOSTABLE MULTIVIBRATOR WITH SCHMITT TRIGGER INPUT

– TOP VIEW –

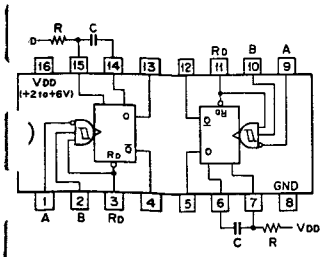

INPUTS			OUTPUTS	
RD	A	B	Q	$\overline{Q}$
0	X	X	0	1
X	1	X	0	1
X	X	0	0	1
1	0	↑	⊓	⊔
1	↓	1	⊓	⊔
↑	0	1	⊓	⊔

0; LOW LEVEL
1; HIGH LEVEL
X; DON'T CARE

OUTPUT PULSE WIDTH = 0.7CR

TD62083AP (TOSHIBA)

DARLINGTON DRIVER

– TOP VIEW –

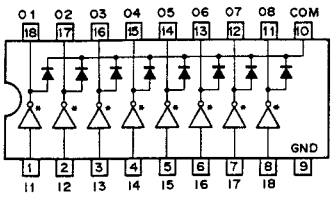

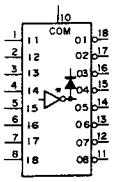

*; OPEN COLLECTOR

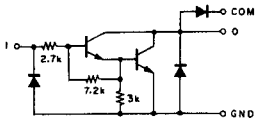

TMS27C512-20JL (TI)

C-MOS 512K (65,536x8 = 524,288)-BIT ERASABLE PROM

– TOP VIEW –

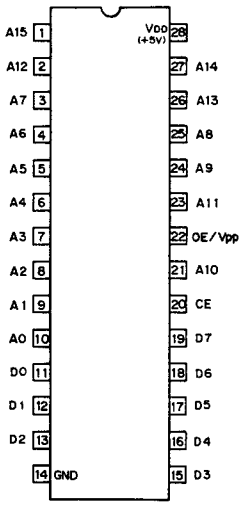

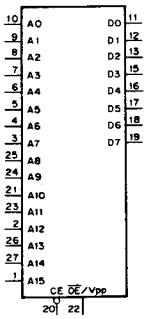

A0 – A15 : ADDRESS INPUTS
CE : CHIP ENABLE INPUT
D0 – D7 : DATA OUTPUTS
OE : OUTPUT ENABLE INPUT
V_{PP} : PROGRAM POWER SUPPLY

An	CE	OE/VPP	VDD	Dn	FUNCTION
AIN	0	0	+5V	DOUT	READ
AIN	0	1	+5V	HI-Z	OUTPUT DISABLE
X	1	X	+5V	HI-Z	STANDBY
AIN	0	+12.5V	+6V	DIN	PGM
AIN	0	0	+6V	DOUT	PGM VERIFY
X	1	+12.5V	+6V	HI-Z	PGM INH

0 : LOW LEVEL
1 : HIGH LEVEL
X : DON'T CARE
HI-Z : HIGH IMPEDANCE

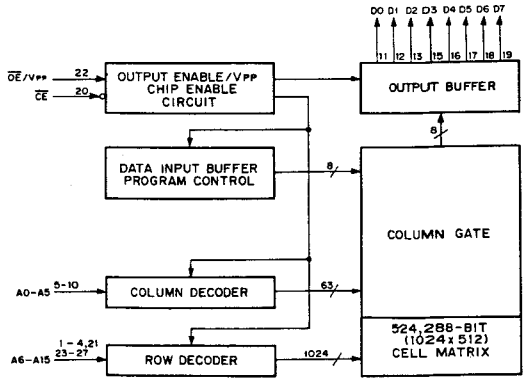

TL082CPS (TI) FLAT PACKAGE

OPERATIONAL AMPLIFIER
(JFET INPUT)
– TOP VIEW –

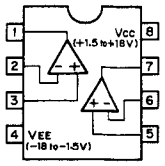

UPC1037HA (NEC)

DOUBLE-BALANCED MODULATOR
– SIDE VIEW –

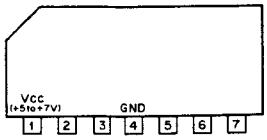

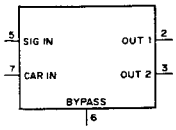

UPC311G2 (NEC) FLAT PACKAGE

VOLTAGE COMPARATOR
– TOP VIEW –

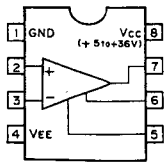

XRA17809T (EXAR) +9V

POSITIVE VOLTAGE REGULATOR
– FRONT VIEW –

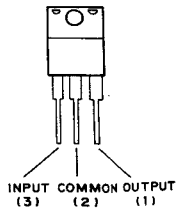

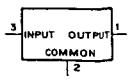

UPD7004C (NEC)

C-MOS 10-BIT SUCCESSIVE COMPARATOR TYPE A/D CONVERTER
– TOP VIEW –

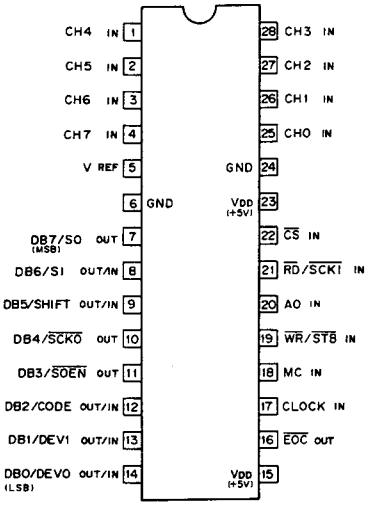

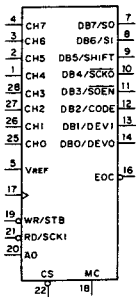

AO ; CONTROL ADDRESS INPUT
CH0~7 ; ANALOG INPUT
CODE ; CODE SELECT (2'S COMPLEMENT/ BINARY) INPUT
CS ; CHIP SELECT INPUT
DB0~7 ; DATA BUS INPUT/OUTPUT
DEVO, DEV1 ; CLOCK RATE SELECT INPUT
EOC ; CONVERSION ENDING SIGNAL OUTPUT
MC ; MODE SELECT INPUT
RD ; READ SIGNAL INPUT
SCKI ; SERIAL CLOCK INPUT
SCKO ; SERIAL CLOCK OUTPUT
SHIFT ; SHIFT SELECT (LSB FIRST/ MSB FIRST)
SI ; SERIAL INPUT
SO ; SERIAL OUTPUT
SOEN ; SERIAL OUTPUT ENABLE OUTPUT
STB ; ADDRESS WRITE STROBE SIGNAL INPUT
WR ; WRITE SIGNAL INPUT

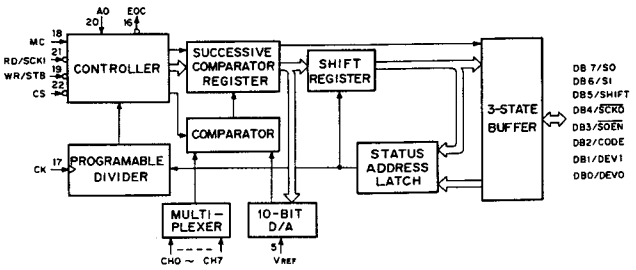

MC	MODE
0	SERIAL
1	PARALLEL

PARALLEL MODE

$\overline{CS}$	$\overline{WR}$	$\overline{RD}$	AO	MODE
1	X	X	X	HIGH IMPEDANCE
0	1	1	X	HIGH IMPEDANCE
0	0	1	0	*1 ANALOG CHANNEL SELECT
0	0	1	1	*2 CODE SELECT/ *3 CLOCK RATE SELECT
0	1	0	0	*4 LOW-BYTE DATA OUTPUT
0	1	0	1	*4 HIGH-BYTE DATA OUTPUT
0	0	0	X	INHIBIT

0 ; LOW LEVEL X : DON'T CARE
1 ; HIGH LEVEL

*1 ANALOG CHANNEL

SEL2	SEL1	SEL0	MPX CHAN.
0	0	0	CH0
0	0	1	CH1
0	1	0	CH2
0	1	1	CH3
1	0	0	CH4
1	0	1	CH5
1	1	0	CH6
1	1	1	CH7

*2 CODE SELECT

CODE	CODE SELECT
0	BINARY DATA
1	2'S COMPLEMENT DATA

*3 CLOCK RATE SELECT

DEV1	DEV 0	CLOCK RATE
0	0	1
0	1	1/2
1	0	1/4
1	1	1/8

*4 LOW/HIGH-BYTE DATA

	DB7	DB 6	DB5	DB4	DB3	DB2	DB1	DB 0
HIGH-BYTE	MSB	2ND	3RD	4TH	5TH	6TH	7TH	8TH
LOW- BYTE	9TH	0	0	0	0	0	0	0

PD71059C (NEC)
C-MOS INTERRUPT CONTROL UNIT
– TOP VIEW –

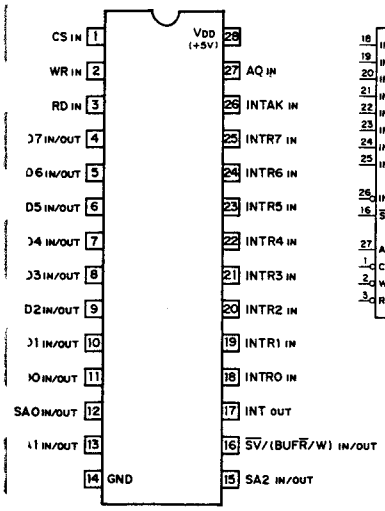

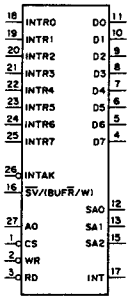

INTR0–INTR7 ; INTERRUPT REQUEST INPUTS
D0–D7 ; DATA BUS INPUTS/OUTPUTS
CS ; CHIP SELECT INPUT
RD ; READ STROBE INPUT
WR ; WRITE STROBE INPUT
A0 ; ADDRESS INPUT
INT ; INTERRUPT OUTPUT
INTAK ; INTERRUPT ACKNOWLEDGE INPUT
SV/(BUFR/W) ; CONTROLLED/BUFFER READ/WRITE INPUT/OUTPUT
SA0–SA2 ; CONTROLLED ADDRESS INPUTS/OUTPUTS

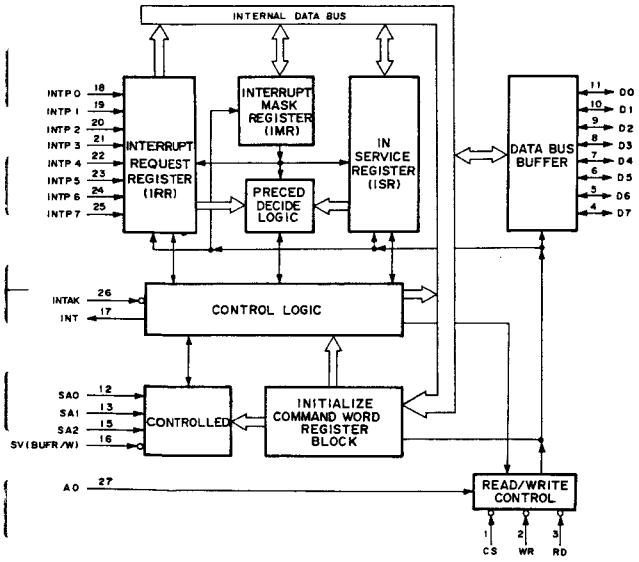

TRANSISTOR

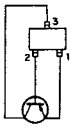

2SA1162G
2SA1462

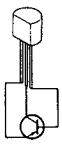

2SA952

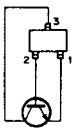

2SC1623
2SC2757

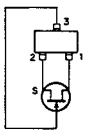

2SK508
2SK94

DIODE

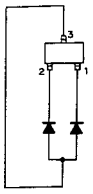

1S2836

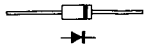

1SS119

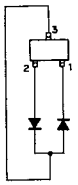

1SS226

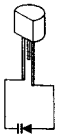

FC54M

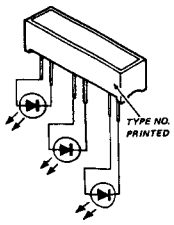

LD-701MG ; GREEN

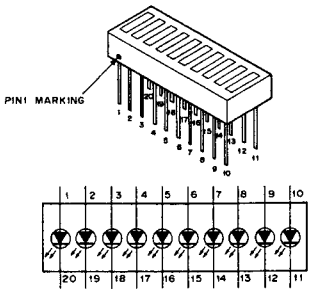

LD-010MW : GREEN

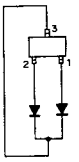

MA152WK

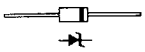

RD ? ?ESB ?

RD ? ?M-B ?
RD ? ?MB

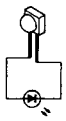

TLR214 ; RED

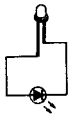

TLY123 ; YELLOW

SECTION 8
SPARE PARTS

8-1. NOTES ON SPARE PARTS

(1) Safety Related Cmponents Warning

Components marked with ⚠ on the schematic diagrams, exploded views and electrical spare parts list are critical to safe operation.

Replace these components with Sony parts whose part numbers appear in this manual or in service bulletins and service manual supplements published by Sony.

(2) Standardization of Parts

Spare parts supplied from Sony Parts Center may not always be identical with the parts actually in use due to accommodating the improved parts and/or engineering changes or standardization of genuine parts.

This manual's exploded views and electrical spare parts list indicate the part numbers of the standardized genuine parts at present.

(3) Stock of Part

Parts marked with "o" in the SP(Supply code)column of the spare parts list are not normally required for routine service work. Orders for parts marked with "o" will be processed, but allow for additional time for delivery.

(4) Units for Capacitors, Inductors and resistors

The following units may be assumed in schmatic diagrams, electrical parts list and exploded views unless otherwise specified.

Capacitor: μ F
Inductor : μ H
Resistor : Ω

8-2. EXPLODED VIEW AND LIST

CONTROL PANEL, DFS-500/500P

No.	Part No.	SP	Description
1	A-8262-836-A	o	FADER ASSY
2	A-8271-686-A	o	MOUNTED CIRCUIT BOARD, KY-223
3	A-8271-687-A	o	MOUNTED CIRCUIT BOARD, KY-225
4	A-8271-688-A	o	MOUNTED CIRCUIT BOARD, KY-226
5	X-3166-840-1	o	PANEL ASSY, UPPER
6	1-466-182-11	s	ENCODER, ROTARY (MAGNETIC)
7	1-571-653-21	s	SWITCH, TACTIL
8	1-571-654-21	s	SWITCH, TACTIL
9	1-574-992-11	s	WIRE ASSY, FLAT TYPE(25 CORE)
10	1-644-610-11	o	PRINTED CIRCUIT BOARD, VR-135
11	1-644-611-11	o	PRINTED CIRCUIT BAORD, VR-136
12	1-644-612-11	o	PRINTED CIRCUIT BOARD, VR-137
13	1-644-613-11	o	PRINTED CIRCUIT BOARD, VR-138
14	1-692-347-11	s	SWITCH, PUSH
15	1-692-348-11	s	SWITCH, PUSH
16	1-951-147-11	o	HARNESS (KY-4)
17	2-139-100-01	s	GEAR (C)
18	2-139-131-01	o	HEAT SINK, CON.
19	2-139-171-01	s	SPACER (F)
20	2-140-311-04	s	KEY TOP
21	3-166-428-01	s	COVER, JOG
22	3-168-210-01	o	SPACER (A)
23	3-177-559-01	o	CHIP (A), SW
24	3-178-147-02	s	KNOB, VOLUME
25	3-178-149-01	o	GRIP (A)
26	3-178-150-01	o	GRIP (B)
27	3-178-151-01	s	LEVER, JOG
28	3-178-173-01	o	PANEL, REAR
29	3-178-178-01	o	PANEL, LOWER
30	3-179-652-01	s	WASHER
31	3-678-079-01	s	SCREW, +BVWH 3X8
32	3-701-443-21	s	WASHER, POLY 5mm DIA., 0.5T
33	3-701-508-00	s	SET SCREW, DOUBLE POINT 3X6
34	3-708-563-01	o	CAP
35	3-711-228-21	o	STANDOFF, D SUB CONN.
36	3-897-313-01	s	BOSS (17.2), RELAY
37	4-928-315-01	s	KEY TOP

Control panel

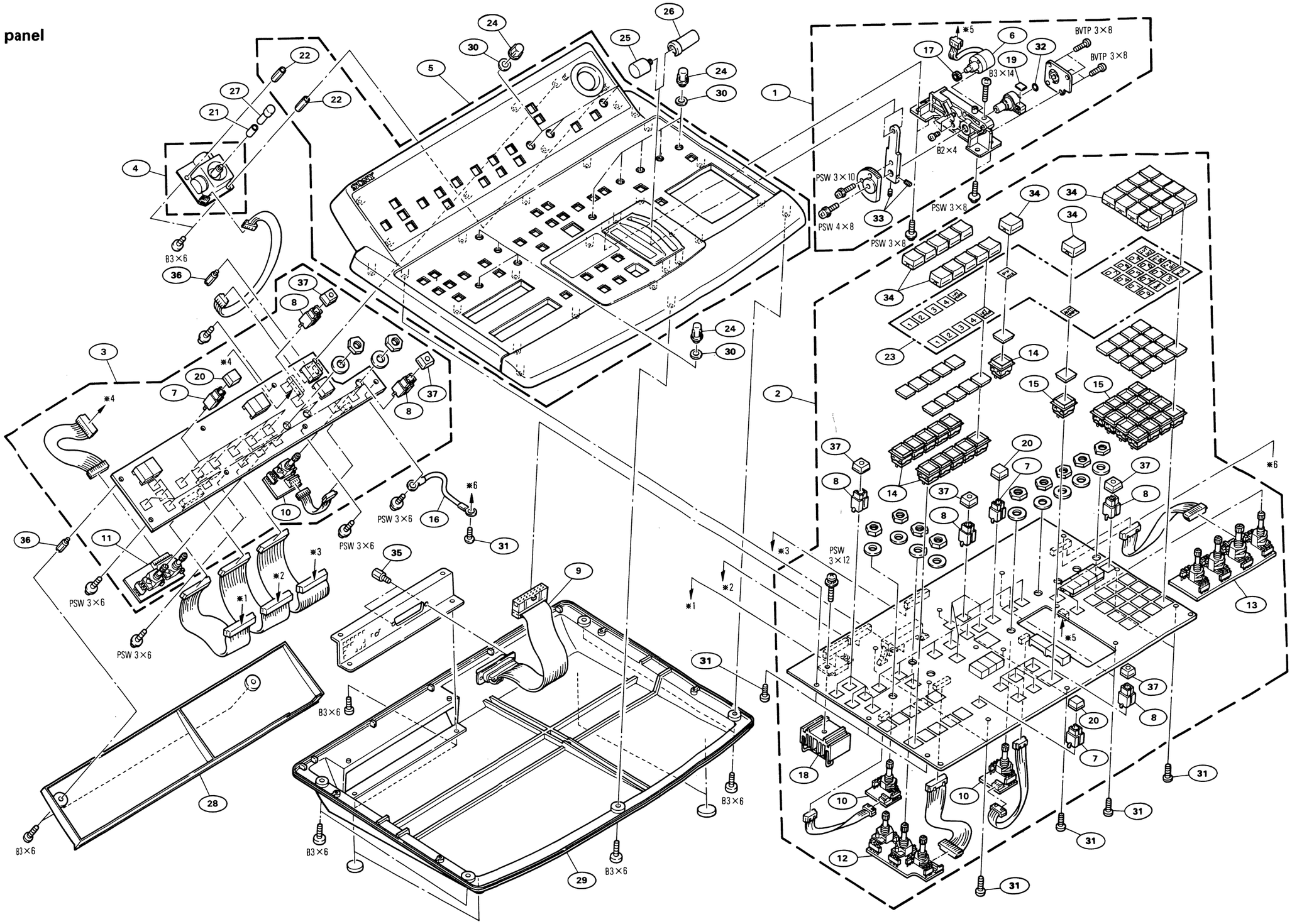

Front panel

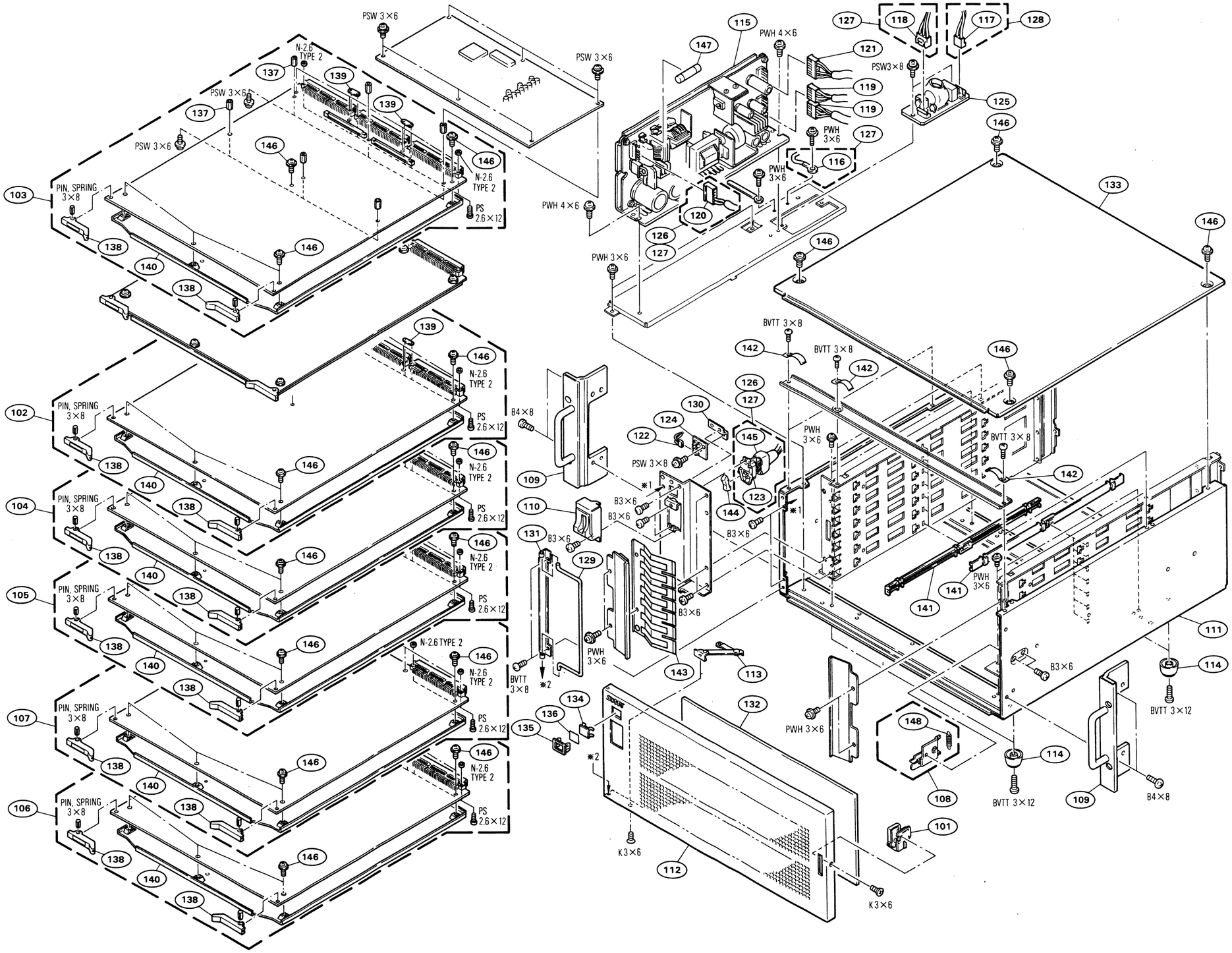
PSW 3×6
N-2.6 TYPE 2
PIN, SPRING 3×8
PS 2.6×12
PWH 4×6
PWH 3×6
PSW3×8
BVTT 3×8
BVTT 3×12
B4×8
B3×6
K3×6
PSW 3×8
BVTT 3×8
PWH 3×6
BVTT 3×12
B4×8
K3×6

FRONT PANEL, DFS-500/500P

No.	Part No.	SP	Description
101	A-8262-832-A	o	HANDLE ASSY, DOOR
102	A-8271-679-A	o	MOUNTED CIRCUIT BOARD, MY-54
103	A-8271-680-A	o	MOUNTED CIRCUIT BOARD, DA-63 (For J, UC)
	A-8271-692-A	o	MOUNTED CIRCUIT BOARD, DA-63P (For EK)
104	A-8271-683-A	o	MOUNTED CIRCUIT BOARD, PU-78
105	A-8271-684-A	o	MOUNTED CIRCUIT BOARD, FM-29 (For J, UC)
	A-8271-693-A	o	MOUNTED CIRCUIT BOARD, FM-29P (For EK)
106	A-8271-685-A	o	MOUNTED CIRCUIT BOARD, AD-76 (For J, UC)
	A-8271-697-A	o	MOUNTED CIRCUIT BOARD, AD-76P (For EK)
107	A-8271-694-A	o	MOUNTED CIRCUIT BOARD, SY-172 (For J)
	A-8271-682-A	o	MOUNTED CIRCUIT BOARD, SY-172 (For UC)
	A-8271-695-A	o	MOUNTED CIRCUIT BOARD, SY-172P (For EK)
108	X-2127-216-1	o	LOCK ASSY, DOOR
109	X-2127-223-2	o	ANGLE ASSY (4U), RACK
110	X-2127-224-1	s	BRACKET ASSY, SW
111	X-2127-225-3	o	CHASSIS (4U) ASSY
112	X-3166-837-1	o	PANEL ASSY, FRONT (For J, UC)
	X-3166-876-1	o	PANEL ASSY, FRONT (For EK)
113	X-3166-838-1	o	STOPPER ASSY
114	X-3566-109-0	s	FOOT ASSY, MF
115	⚠1-413-776-11	s	SWITCHING REGULATOR (SSOG1213) (For J, UC)
	⚠1-413-776-21	s	SWITCHING REGULATOR (SSOG1213KA) (For EK)
116	1-535-340-11	o	TERMINAL, SOLDERLESS
117	⚠1-562-211-11	o	HOUSING, CONNECTOR 3P (For EK)
	⚠1-562-210-11	o	CONNECTOR, CONTACT
118	⚠1-562-286-11	o	HOUSING, CONNECTOR 5P (For EK)
	⚠1-562-210-11	o	CONNECTOR, CONTACT
119	1-562-819-11	o	HOUSING, CONNECTOR 4P
	⚠1-560-764-21	o	TERMINAL, SOLDERLESS
120	⚠1-562-820-11	o	HOUSING, CONNECTOR 5P
	⚠1-560-764-21	o	TERMINAL, SOLDERLESS
121	1-562-821-11	o	HOUSING, CONNECTOR 6P
	⚠1-560-764-21	o	TERMINAL, SOLDERLESS
122	1-569-196-31	o	HOUSING, CONNECTOR 3P
	1-569-193-11	o	TERMINAL, SOLDERLESS
123	⚠1-570-117-41	s	SWITCH, SEESAW (AC POWER)
124	1-620-338-11	o	PC BOARD, LE-55
125	1-636-387-12	o	PC BOARD, AC-111 (For EK)
126	⚠1-950-804-11	o	HARNESS (ACW-500) (For J, UC)
127	⚠1-950-974-11	o	HARNESS (ACW-500PB) (For EK)
128	⚠1-950-975-11	o	HARNESS (ACW-500PA) (For EK)
129	2-139-101-01	o	SHAFT (4U), HINGE
130	2-139-108-01	o	BRACKET, LED
131	2-139-127-01	s	HINGE (4U)
132	2-139-136-03	s	FILTER (4U)
133	2-139-153-01	o	PLATE (D450), TOP
134	2-139-192-01	o	FRAME, INDICATOR WINDOW
135	2-139-193-01	o	WINDOW, INDICATOR
136	2-249-353-00	o	COVER, LAMP
137	2-280-622-21	o	SUPPORT (M3X10), HEXAGON
138	3-166-184-01	o	LEVER, PC BOARD
139	3-166-185-01	s	NUT, PLATE
140	3-178-157-01	o	PLATE, SHIELD
141	3-178-164-01	o	RAIL (290), PC BOARD GUIDE
142	3-178-672-01	o	FINGER, SHIELD
143	3-179-322-01	o	SPRING (L), GROUND
144	3-688-814-01	s	CAP, SWITCH
145	4-378-341-01	o	COVER, SWITCH
146	4-886-821-11	s	SCREW, M3 CASE
147	⚠9-903-804-01	s	FUSE GGL10 250V10A (For J, UC)
	⚠9-903-806-01	s	FUSE S506-6.3A COLOR (For EK)
148	9-910-999-31	s	SPRING, TENSION

REAR PANEL, DFS-500/500P

No.	Part No.	SP	Description
201	A-8271-678-A	o	MOUNTED CIRCUIT BOARD, MB-385
202	A-8271-681-A	o	MOUNTED CIRCUIT BOARD, CN-573
203	X-2068-004-0	s	TERMINAL ASSY
204	1-535-316-11	s	TERMINAL, GROUND (M4)
205	1-541-329-31	s	FAN, DC (WITH ALARM)
206	1-562-285-11	o	HOUSING, CONNECTOR 4P
	⚠1-562-210-11	o	CONNECTOR, CONTACT
207	⚠1-562-286-11	o	HOUSING, CONNECTOR 5P
	⚠1-562-210-11	o	CONNECTOR, CONTACT
208	1-563-337-11	s	HOUSING, CONNECTOR (DIP) 96P
209	1-568-676-11	o	CONNECTOR, D-SUB 9P
210	1-568-677-11	o	CONNECTOR, D-SUB 25P
211	1-569-196-11	o	HOUSING, CONNECTOR 3P
	1-569-193-11	o	TERMINAL, SOLDERLESS
212	1-570-157-51	s	SWITCH, SLIDE
213	1-573-580-11	s	CONNECTOR, BNC (RECEPTACLE)
214	1-573-589-11	s	CONNECTOR (R-M) 12P
215	1-573-590-12	s	CONNECTOR, (S) TERMINAL 4P
216	1-573-592-11	s	CONNECTOR (R-F) 12P
217	⚠1-580-375-11	s	INLET 3P
218	1-691-274-11	s	CONNECTOR ASSY (BNC) 1P
219	1-695-807-11	s	CONNECOTR, BNC (RECEPTACLE)
220	⚠1-950-804-11	o	HARNESS (ACW-500) (For J, UC)
	⚠1-950-975-11	o	HARNESS (ACW-500PA) (For EK)
221	2-068-008-00	s	WASHER
222	2-139-222-01	o	SPRING
223	2-990-241-02	s	HOLDER (A), PLUG
224	3-178-136-01	o	BRACKET, FAN
225	3-178-137-01	o	BRACKET, D-SUB
226	3-178-161-01	o	PANEL, REAR
227	3-673-910-21	o	SCREW, CONNECTOR
228	4-601-466-11	o	COVER, 3P INLET
229	4-876-607-21	o	COLLAR (E), PLATE, JACK

Rear panel

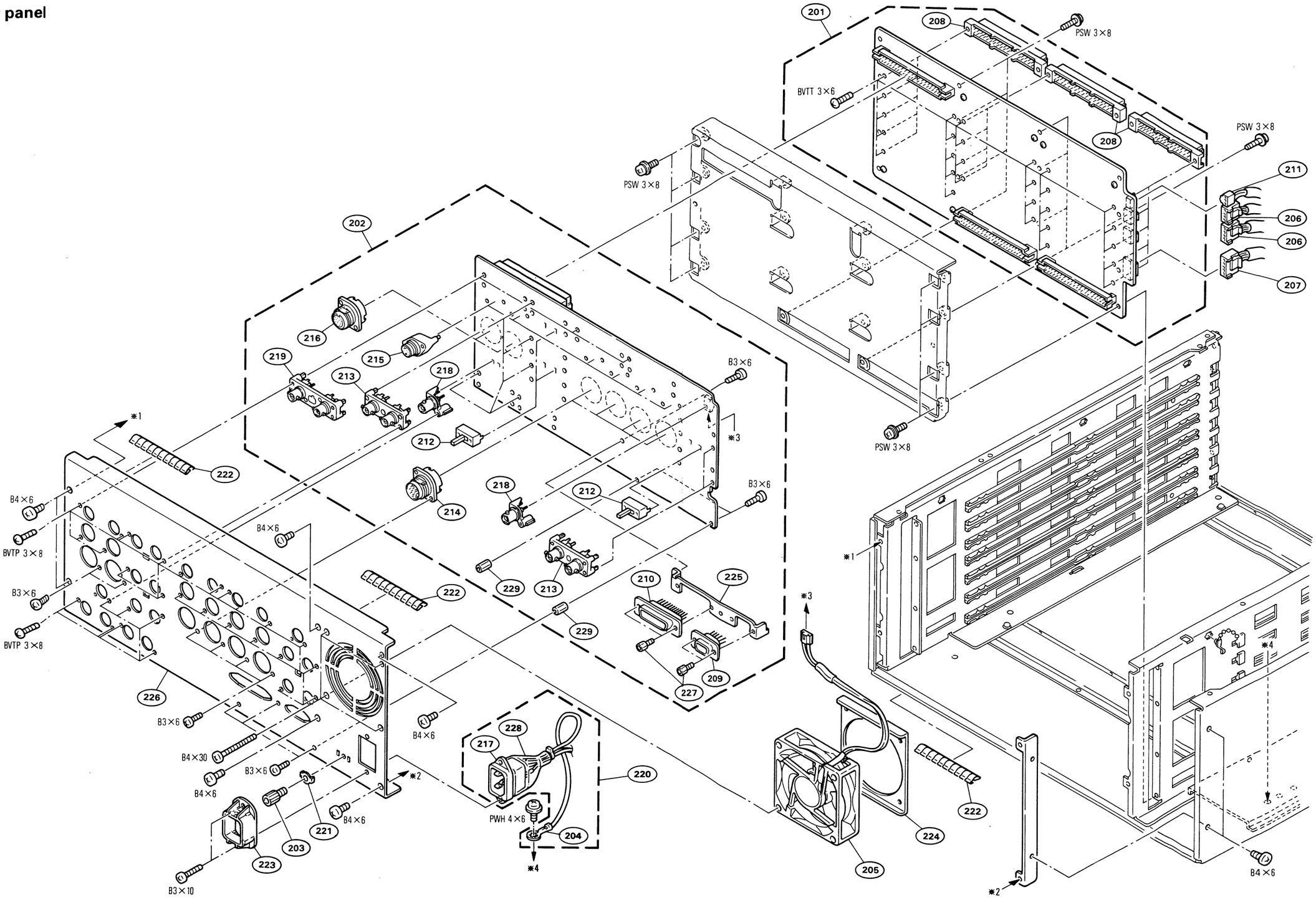
201
208
PSW 3×8
BVTT 3×6
208
PSW 3×8
PSW 3×8
211
206
206
207
202
216
219
215
213
218
B3×6
※1
※3
212
222
214
218
212
B3×6
B4×6
B4×6
BVTP 3×8
B3×6
BVTP 3×8
222
229
213
210
225
229
209
227
226
B3×6
B4×6
B4×30
B3×6
B4×6
※2
B4×6
221
203
223
B3×10
228
217
220
PWH 4×6
204
※4
※3
※1
※4
222
224
205
※2
B4×6

8-3. ELECTRICAL PARTS LIST

CAPACITOR (CERAMIC)

Part No.	SP	Description
1-163-097-00	s	CERAMIC, CHIP 15pF 5% 50V
1-163-038-00	s	CERAMIC, CHIP 0.1 50V

RESISTOR (METAL)

Part No.	SP	Description
1-216-624-11	s	METAL, CHIP 75 1% 1/10W
1-216-627-11	s	METAL, CHIP 100 1% 1/10W
1-216-631-11	s	METAL, CHIP 150 1% 1/10W
1-216-651-11	s	METAL, CHIP 1.0k 1% 1/10W
1-216-659-11	s	METAL, CHIP 2.2k 1% 1/10W
1-216-667-11	s	METAL, CHIP 4.7k 1% 1/10W
1-216-675-11	s	METAL, CHIP 10k 1% 1/10W
1-216-699-11	s	METAL, CHIP 100k 1% 1/10W

AC-111 BOARD used for DFS-500P

Ref. No. or Q'ty	Part No.	SP	Description
1pc	1-636-387-12	o	PRINTED CIRCUIT BOARD, AC-111
C1	⚠1-136-185-00	s	FILM 0.22uF 20% 250V
C2	⚠1-137-106-11	s	FILM 0.022uF 20% 25V
C3	⚠1-162-573-11	s	CERAMIC 100PF 10% 400V
C4	⚠1-162-573-11	s	CERAMIC 100PF 10% 400V
CN1	⚠1-564-321-00	o	CONNECTOR, VH 2P, MALE
CN2	⚠1-564-687-11	o	CONNECTOR, VH 3P, MALE
L1	⚠1-421-944-11	s	TRANSFORMER, LINE FILTER
R1	⚠1-214-937-00	s	METAL 1M 1% 1/2W

AD-76 BOARD used for DFS-500

Ref. No. or Q'ty	Part No.	SP	Description
1pc	A-8271-685-A	o	MOUNTED CIRCUIT BOARD, AD-76
2pcs	3-166-184-01	o	LEVER, PC BOARD
2pcs	3-166-185-01	s	NUT, PLATE
1pc	3-178-157-01	o	PLATE, SHIELD
8pcs	4-886-821-11	s	SCREW, S TIGHT, +PTTWH 3X6
2pcs	7-622-207-05	s	N 2.6, TYPE 2
2pcs	7-626-320-11	s	PIN, SPRING 3X8
6pcs	7-628-254-40	s	SCREW +PS 2.6X12
C1	1-126-934-11	s	ELECT 220uF 20% 16V
C2	1-162-638-11	s	CERAMIC, CHIP 1uF 16V
C3	1-126-934-11	s	ELECT 220uF 20% 16V
C4	1-162-638-11	s	CERAMIC, CHIP 1uF 16V
C5	1-126-934-11	s	ELECT 220uF 20% 16V
C6	1-162-638-11	s	CERAMIC, CHIP 1uF 16V
C7	1-162-638-11	s	CERAMIC, CHIP 1uF 16V
C8	1-126-392-11	s	ELECT, CHIP 100uF 20% 6.3V
C9	1-126-934-11	s	ELECT 220uF 20% 16V
C10	1-162-638-11	s	CERAMIC, CHIP 1uF 16V
C11	1-162-638-11	s	CERAMIC, CHIP 1uF 16V
C12	1-126-396-11	s	ELECT, CHIP 47uF 20% 16V
C13	1-126-934-11	s	ELECT 220uF 20% 16V
C14	1-162-638-11	s	CERAMIC, CHIP 1uF 16V
C15	1-162-638-11	s	CERAMIC, CHIP 1uF 16V
C16	1-126-396-11	s	ELECT, CHIP 47uF 20% 16V
C17	1-126-934-11	s	ELECT 220uF 20% 16V
C18	1-162-638-11	s	CERAMIC, CHIP 1uF 16V
C19	1-126-934-11	s	ELECT 220uF 20% 16V
C20	1-162-638-11	s	CERAMIC, CHIP 1uF 16V
C21	1-126-934-11	s	ELECT 220uF 20% 16V
C22	1-162-638-11	s	CERAMIC, CHIP 1uF 16V
C23	1-162-638-11	s	CERAMIC, CHIP 1uF 16V
C24	1-126-396-11	s	ELECT, CHIP 47uF 20% 16V
C25	1-126-925-11	s	ELECT 470uF 20% 10V
C26	1-162-638-11	s	CERAMIC, CHIP 1uF 16V
C27	1-126-925-11	s	ELECT 470uF 20% 10V
C28	1-162-638-11	s	CERAMIC, CHIP 1uF 16V
C31	1-126-394-11	s	ELECT, CHIP 10uF 20% 16V
C36	1-126-394-11	s	ELECT, CHIP 10uF 20% 16V
C37	1-126-396-11	s	ELECT, CHIP 47uF 20% 16V
C39	1-163-235-11	s	CERAMIC, CHIP 22PF 5% 50V
C41	1-126-392-11	s	ELECT, CHIP 100uF 20% 6.3V
C101	1-126-394-11	s	ELECT, CHIP 10uF 20% 16V
C102	1-126-394-11	s	ELECT, CHIP 10uF 20% 16V
C103	1-162-638-11	s	CERAMIC, CHIP 1uF 16V
C104	1-126-394-11	s	ELECT, CHIP 10uF 20% 16V
C105	1-126-394-11	s	ELECT, CHIP 10uF 20% 16V
C106	1-126-394-11	s	ELECT, CHIP 10uF 20% 16V
C107	1-126-396-11	s	ELECT, CHIP 47uF 20% 16V
C109	1-126-394-11	s	ELECT, CHIP 10uF 20% 16V
C110	1-126-394-11	s	ELECT, CHIP 10uF 20% 16V
C111	1-162-638-11	s	CERAMIC, CHIP 1uF 16V
C112	1-126-394-11	s	ELECT, CHIP 10uF 20% 16V
C113	1-126-394-11	s	ELECT, CHIP 10uF 20% 16V
C114	1-126-394-11	s	ELECT, CHIP 10uF 20% 16V
C115	1-126-396-11	s	ELECT, CHIP 47uF 20% 16V
C117	1-126-394-11	s	ELECT, CHIP 10uF 20% 16V
C118	1-126-394-11	s	ELECT, CHIP 10uF 20% 16V
C119	1-162-638-11	s	CERAMIC, CHIP 1uF 16V

NOTE: Please see page 8-9 for the parts that are not listed in the parts list.

(AD-76 BOARD used for DFS-500)

Ref. No. or Q'ty	Part No.	SP	Description
C120	1-126-394-11	s	ELECT, CHIP 10uF 20% 16V
C121	1-126-394-11	s	ELECT, CHIP 10uF 20% 16V
C122	1-126-394-11	s	ELECT, CHIP 10uF 20% 16V
C123	1-126-396-11	s	ELECT, CHIP 47uF 20% 16V
C125	1-126-394-11	s	ELECT, CHIP 10uF 20% 16V
C126	1-126-394-11	s	ELECT, CHIP 10uF 20% 16V
C127	1-162-638-11	s	CERAMIC, CHIP 1uF 16V
C128	1-126-394-11	s	ELECT, CHIP 10uF 20% 16V
C129	1-126-394-11	s	ELECT, CHIP 10uF 20% 16V
C130	1-126-394-11	s	ELECT, CHIP 10uF 20% 16V
C131	1-126-396-11	s	ELECT, CHIP 47uF 20% 16V
C133	1-126-394-11	s	ELECT, CHIP 10uF 20% 16V
C134	1-126-394-11	s	ELECT, CHIP 10uF 20% 16V
C135	1-162-638-11	s	CERAMIC, CHIP 1uF 16V
C136	1-126-394-11	s	ELECT, CHIP 10uF 20% 16V
C137	1-126-394-11	s	ELECT, CHIP 10uF 20% 16V
C138	1-126-394-11	s	ELECT, CHIP 10uF 20% 16V
C139	1-126-396-11	s	ELECT, CHIP 47uF 20% 16V
C141	1-126-394-11	s	ELECT, CHIP 10uF 20% 16V
C142	1-126-394-11	s	ELECT, CHIP 10uF 20% 16V
C143	1-162-638-11	s	CERAMIC, CHIP 1uF 16V
C144	1-126-394-11	s	ELECT, CHIP 10uF 20% 16V
C145	1-126-394-11	s	ELECT, CHIP 10uF 20% 16V
C146	1-126-394-11	s	ELECT, CHIP 10uF 20% 16V
C147	1-126-396-11	s	ELECT, CHIP 47uF 20% 16V
C201	1-126-394-11	s	ELECT, CHIP 10uF 20% 16V
C202	1-126-394-11	s	ELECT, CHIP 10uF 20% 16V
C203	1-162-638-11	s	CERAMIC, CHIP 1uF 16V
C204	1-126-394-11	s	ELECT, CHIP 10uF 20% 16V
C205	1-126-394-11	s	ELECT, CHIP 10uF 20% 16V
C206	1-126-394-11	s	ELECT, CHIP 10uF 20% 16V
C207	1-126-396-11	s	ELECT, CHIP 47uF 20% 16V
C209	1-126-394-11	s	ELECT, CHIP 10uF 20% 16V
C210	1-126-394-11	s	ELECT, CHIP 10uF 20% 16V
C211	1-162-638-11	s	CERAMIC, CHIP 1uF 16V
C212	1-126-394-11	s	ELECT, CHIP 10uF 20% 16V
C213	1-126-394-11	s	ELECT, CHIP 10uF 20% 16V
C214	1-126-394-11	s	ELECT, CHIP 10uF 20% 16V
C215	1-126-396-11	s	ELECT, CHIP 47uF 20% 16V
C217	1-126-394-11	s	ELECT, CHIP 10uF 20% 16V
C218	1-126-394-11	s	ELECT, CHIP 10uF 20% 16V
C219	1-162-638-11	s	CERAMIC, CHIP 1uF 16V
C220	1-126-394-11	s	ELECT, CHIP 10uF 20% 16V
C221	1-126-394-11	s	ELECT, CHIP 10uF 20% 16V
C222	1-126-394-11	s	ELECT, CHIP 10uF 20% 16V
C223	1-126-396-11	s	ELECT, CHIP 47uF 20% 16V
C225	1-126-394-11	s	ELECT, CHIP 10uF 20% 16V
C226	1-126-394-11	s	ELECT, CHIP 10uF 20% 16V
C227	1-162-638-11	s	CERAMIC, CHIP 1uF 16V
C228	1-126-394-11	s	ELECT, CHIP 10uF 20% 16V
C229	1-126-394-11	s	ELECT, CHIP 10uF 20% 16V
C230	1-126-394-11	s	ELECT, CHIP 10uF 20% 16V
C231	1-126-396-11	s	ELECT, CHIP 47uF 20% 16V
C233	1-126-394-11	s	ELECT, CHIP 10uF 20% 16V
C234	1-126-394-11	s	ELECT, CHIP 10uF 20% 16V
C235	1-162-638-11	s	CERAMIC, CHIP 1uF 16V
C236	1-126-394-11	s	ELECT, CHIP 10uF 20% 16V
C237	1-126-394-11	s	ELECT, CHIP 10uF 20% 16V
C238	1-126-394-11	s	ELECT, CHIP 10uF 20% 16V

(AD-76 BOARD used for DFS-500)

Ref. No. or Q'ty	Part No.	SP	Description
C239	1-126-396-11	s	ELECT, CHIP 47uF 20% 16V
C241	1-126-394-11	s	ELECT, CHIP 10uF 20% 16V
C242	1-126-394-11	s	ELECT, CHIP 10uF 20% 16V
C243	1-162-638-11	s	CERAMIC, CHIP 1uF 16V
C244	1-126-394-11	s	ELECT, CHIP 10uF 20% 16V
C245	1-126-394-11	s	ELECT, CHIP 10uF 20% 16V
C246	1-126-394-11	s	ELECT, CHIP 10uF 20% 16V
C247	1-126-396-11	s	ELECT, CHIP 47uF 20% 16V
C301	1-163-222-11	s	CERAMIC, CHIP 5PF 50V
C302	1-163-222-11	s	CERAMIC, CHIP 5PF 50V
C305	1-126-394-11	s	ELECT, CHIP 10uF 20% 16V
C306	1-126-396-11	s	ELECT, CHIP 47uF 20% 16V
C307	1-162-638-11	s	CERAMIC, CHIP 1uF 16V
C309	1-126-396-11	s	ELECT, CHIP 47uF 20% 16V
C310	1-126-392-11	s	ELECT, CHIP 100uF 20% 6.3V
C311	1-126-392-11	s	ELECT, CHIP 100uF 20% 6.3V
C312	1-126-392-11	s	ELECT, CHIP 100uF 20% 6.3V
C313	1-162-638-11	s	CERAMIC, CHIP 1uF 16V
C318	1-163-133-00	s	CERAMIC, CHIP 470PF 5% 50V
C319	1-126-394-11	s	ELECT, CHIP 10uF 20% 16V
C321	1-126-392-11	s	ELECT, CHIP 100uF 20% 6.3V
C332	1-163-224-11	s	CERAMIC 7PF 0.25PF 50V
C341	1-126-394-11	s	ELECT, CHIP 10uF 20% 16V
C342	1-126-394-11	s	ELECT, CHIP 10uF 20% 16V
C343	1-126-394-11	s	ELECT, CHIP 10uF 20% 16V
C344	1-126-394-11	s	ELECT, CHIP 10uF 20% 16V
C347	1-126-396-11	s	ELECT, CHIP 47uF 20% 16V
C352	1-163-251-11	s	CERAMIC, CHIP 100PF 5% 50V
C353	1-163-251-11	s	CERAMIC, CHIP 100PF 5% 50V
C355	1-126-392-11	s	ELECT, CHIP 100uF 20% 6.3V
C359	1-164-232-11	s	CERAMIC 0.01uF 10% 100V
C361	1-126-394-11	s	ELECT, CHIP 10uF 20% 16V
C363	1-163-035-00	s	CERAMIC, CHIP 0.047uF 50V
C366	1-162-638-11	s	CERAMIC, CHIP 1uF 16V
C367	1-126-392-11	s	ELECT, CHIP 100uF 20% 6.3V
C370	1-164-232-11	s	CERAMIC 0.01uF 10% 100V
C371	1-164-232-11	s	CERAMIC 0.01uF 10% 100V
C382	1-163-251-11	s	CERAMIC, CHIP 100PF 5% 50V
C383	1-163-251-11	s	CERAMIC, CHIP 100PF 5% 50V
C385	1-163-239-11	s	CERAMIC, CHIP 33PF 5% 50V
C386	1-163-239-11	s	CERAMIC, CHIP 33PF 5% 50V
C387	1-163-239-11	s	CERAMIC, CHIP 33PF 5% 50V
C388	1-163-121-00	s	CERAMIC, CHIP 150PF 5% 50V
C401	1-163-222-11	s	CERAMIC, CHIP 5PF 50V
C402	1-163-222-11	s	CERAMIC, CHIP 5PF 50V
C405	1-126-394-11	s	ELECT, CHIP 10uF 20% 16V
C406	1-126-396-11	s	ELECT, CHIP 47uF 20% 16V
C407	1-162-638-11	s	CERAMIC, CHIP 1uF 16V
C409	1-126-396-11	s	ELECT, CHIP 47uF 20% 16V
C410	1-126-392-11	s	ELECT, CHIP 100uF 20% 6.3V
C411	1-126-392-11	s	ELECT, CHIP 100uF 20% 6.3V
C412	1-126-392-11	s	ELECT, CHIP 100uF 20% 6.3V
C413	1-162-638-11	s	CERAMIC, CHIP 1uF 16V
C418	1-163-133-00	s	CERAMIC, CHIP 470PF 5% 50V
C419	1-126-394-11	s	ELECT, CHIP 10uF 20% 16V
C421	1-126-392-11	s	ELECT, CHIP 100uF 20% 6.3V
C432	1-163-224-11	s	CERAMIC 7PF 0.25PF 50V
C441	1-126-394-11	s	ELECT, CHIP 10uF 20% 16V
C442	1-126-394-11	s	ELECT, CHIP 10uF 20% 16V

NOTE: Please see page 8-9 for the parts that are not listed in the parts list.

(AD-76 BOARD used for DFS-500)

Ref. No. or Q'ty	Part No.	SP	Description
C443	1-126-394-11	s	ELECT, CHIP 10uF 20% 16V
C444	1-126-394-11	s	ELECT, CHIP 10uF 20% 16V
C447	1-126-396-11	s	ELECT, CHIP 47uF 20% 16V
C452	1-163-251-11	s	CERAMIC, CHIP 100PF 5% 50V
C453	1-163-251-11	s	CERAMIC, CHIP 100PF 5% 50V
C455	1-126-392-11	s	ELECT, CHIP 100uF 20% 6.3V
C459	1-164-232-11	s	CERAMIC 0.01uF 10% 100V
C461	1-126-394-11	s	ELECT, CHIP 10uF 20% 16V
C463	1-163-035-00	s	CERAMIC, CHIP 0.047uF 50V
C466	1-162-638-11	s	CERAMIC, CHIP 1uF 16V
C467	1-126-392-11	s	ELECT, CHIP 100uF 20% 6.3V
C470	1-164-232-11	s	CERAMIC 0.01uF 10% 100V
C471	1-164-232-11	s	CERAMIC 0.01uF 10% 100V
C482	1-163-251-11	s	CERAMIC, CHIP 100PF 5% 50V
C483	1-163-251-11	s	CERAMIC, CHIP 100PF 5% 50V
C485	1-163-239-11	s	CERAMIC, CHIP 33PF 5% 50V
C486	1-163-239-11	s	CERAMIC, CHIP 33PF 5% 50V
C487	1-163-239-11	s	CERAMIC, CHIP 33PF 5% 50V
C488	1-163-121-00	s	CERAMIC, CHIP 150PF 5% 50V
C501	1-126-394-11	s	ELECT, CHIP 10uF 20% 16V
C502	1-126-394-11	s	ELECT, CHIP 10uF 20% 16V
C507	1-162-638-11	s	CERAMIC, CHIP 1uF 16V
C508	1-162-638-11	s	CERAMIC, CHIP 1uF 16V
C510	1-126-396-11	s	ELECT, CHIP 47uF 20% 16V
C521	1-126-392-11	s	ELECT, CHIP 100uF 20% 6.3V
C525	1-162-638-11	s	CERAMIC, CHIP 1uF 16V
C526	1-164-005-11	s	CERAMIC, CHIP 0.47uF 25V
C527	1-162-638-11	s	CERAMIC, CHIP 1uF 16V
C528	1-163-035-00	s	CERAMIC, CHIP 0.047uF 50V
C529	1-163-035-00	s	CERAMIC, CHIP 0.047uF 50V
C530	1-162-638-11	s	CERAMIC, CHIP 1uF 16V
C531	1-126-392-11	s	ELECT, CHIP 100uF 20% 6.3V
C534	1-126-396-11	s	ELECT, CHIP 47uF 20% 16V
C536	1-163-251-11	s	CERAMIC, CHIP 100PF 5% 50V
C537	1-163-275-11	s	CERAMIC, CHIP 0.001uF 5% 50V
C539	1-163-235-11	s	CERAMIC, CHIP 22PF 5% 50V
C540	1-163-275-11	s	CERAMIC, CHIP 0.001uF 5% 50V
C541	1-164-232-11	s	CERAMIC 0.01uF 10% 100V
C542	1-126-398-11	s	ELECT, CHIP 4.7uF 20% 35V
C543	1-163-229-11	s	CERAMIC, CHIP 12PF 5% 50V
C544	1-163-275-11	s	CERAMIC, CHIP 0.001uF 5% 50V
C545	1-163-275-11	s	CERAMIC, CHIP 0.001uF 5% 50V
C546	1-163-275-11	s	CERAMIC, CHIP 0.001uF 5% 50V
C547	1-163-227-11	s	CERAMIC, CHIP 10PF 5% 50V
C548	1-126-394-11	s	ELECT, CHIP 10uF 20% 16V
C560	1-126-392-11	s	ELECT, CHIP 100uF 20% 6.3V
C562	1-164-232-11	s	CERAMIC 0.01uF 10% 100V
C563	1-126-398-11	s	ELECT, CHIP 4.7uF 20% 35V
C565	1-164-232-11	s	CERAMIC 0.01uF 10% 100V
C566	1-126-392-11	s	ELECT, CHIP 100uF 20% 6.3V
C572	1-163-241-11	s	CERAMIC, CHIP 39PF 5% 50V
C576	1-163-241-11	s	CERAMIC, CHIP 39PF 5% 50V
C585	1-163-239-11	s	CERAMIC, CHIP 33PF 5% 50V
C586	1-163-239-11	s	CERAMIC, CHIP 33PF 5% 50V
C587	1-163-239-11	s	CERAMIC, CHIP 33PF 5% 50V
C588	1-163-239-11	s	CERAMIC, CHIP 33PF 5% 50V
C589	1-163-239-11	s	CERAMIC, CHIP 33PF 5% 50V
C590	1-163-121-00	s	CERAMIC, CHIP 150PF 5% 50V
C592	1-163-251-11	s	CERAMIC, CHIP 100PF 5% 50V

(AD-76 BOARD used for DFS-500)

Ref. No. or Q'ty	Part No.	SP	Description
C593	1-126-394-11	s	ELECT, CHIP 10uF 20% 16V
C594	1-163-239-11	s	CERAMIC, CHIP 33PF 5% 50V
C595	1-126-392-11	s	ELECT, CHIP 100uF 20% 6.3V
C601	1-126-394-11	s	ELECT, CHIP 10uF 20% 16V
C602	1-126-394-11	s	ELECT, CHIP 10uF 20% 16V
C607	1-162-638-11	s	CERAMIC, CHIP 1uF 16V
C608	1-162-638-11	s	CERAMIC, CHIP 1uF 16V
C610	1-126-396-11	s	ELECT, CHIP 47uF 20% 16V
C621	1-126-392-11	s	ELECT, CHIP 100uF 20% 6.3V
C625	1-162-638-11	s	CERAMIC, CHIP 1uF 16V
C626	1-164-005-11	s	CERAMIC, CHIP 0.47uF 25V
C627	1-162-638-11	s	CERAMIC, CHIP 1uF 16V
C628	1-163-035-00	s	CERAMIC, CHIP 0.047uF 50V
C629	1-163-035-00	s	CERAMIC, CHIP 0.047uF 50V
C630	1-162-638-11	s	CERAMIC, CHIP 1uF 16V
C631	1-126-392-11	s	ELECT, CHIP 100uF 20% 6.3V
C634	1-126-396-11	s	ELECT, CHIP 47uF 20% 16V
C636	1-163-251-11	s	CERAMIC, CHIP 100PF 5% 50V
C637	1-163-275-11	s	CERAMIC, CHIP 0.001uF 5% 50V
C639	1-163-235-11	s	CERAMIC, CHIP 22PF 5% 50V
C640	1-163-275-11	s	CERAMIC, CHIP 0.001uF 5% 50V
C641	1-164-232-11	s	CERAMIC 0.01uF 10% 100V
C642	1-126-398-11	s	ELECT, CHIP 4.7uF 20% 35V
C643	1-163-229-11	s	CERAMIC, CHIP 12PF 5% 50V
C644	1-163-275-11	s	CERAMIC, CHIP 0.001uF 5% 50V
C645	1-163-275-11	s	CERAMIC, CHIP 0.001uF 5% 50V
C646	1-163-275-11	s	CERAMIC, CHIP 0.001uF 5% 50V
C647	1-163-227-11	s	CERAMIC, CHIP 10PF 5% 50V
C648	1-126-394-11	s	ELECT, CHIP 10uF 20% 16V
C660	1-126-392-11	s	ELECT, CHIP 100uF 20% 6.3V
C662	1-164-232-11	s	CERAMIC 0.01uF 10% 100V
C663	1-126-398-11	s	ELECT, CHIP 4.7uF 20% 35V
C665	1-164-232-11	s	CERAMIC 0.01uF 10% 100V
C666	1-126-392-11	s	ELECT, CHIP 100uF 20% 6.3V
C672	1-163-241-11	s	CERAMIC, CHIP 39PF 5% 50V
C676	1-163-241-11	s	CERAMIC, CHIP 39PF 5% 50V
C685	1-163-239-11	s	CERAMIC, CHIP 33PF 5% 50V
C686	1-163-239-11	s	CERAMIC, CHIP 33PF 5% 50V
C687	1-163-239-11	s	CERAMIC, CHIP 33PF 5% 50V
C688	1-163-239-11	s	CERAMIC, CHIP 33PF 5% 50V
C689	1-163-239-11	s	CERAMIC, CHIP 33PF 5% 50V
C690	1-163-121-00	s	CERAMIC, CHIP 150PF 5% 50V
C692	1-163-251-11	s	CERAMIC, CHIP 100PF 5% 50V
C693	1-126-394-11	s	ELECT, CHIP 10uF 20% 16V
C694	1-163-239-11	s	CERAMIC, CHIP 33PF 5% 50V
C695	1-126-392-11	s	ELECT, CHIP 100uF 20% 6.3V
C701	1-162-638-11	s	CERAMIC, CHIP 1uF 16V
C702	1-126-396-11	s	ELECT, CHIP 47uF 20% 16V
C703	1-126-396-11	s	ELECT, CHIP 47uF 20% 16V
C704	1-163-087-00	s	CERAMIC, CHIP 4PF 50V
C720	1-163-235-11	s	CERAMIC, CHIP 22PF 5% 50V
C740	1-163-235-11	s	CERAMIC, CHIP 22PF 5% 50V
C751	1-104-601-21	s	ELECT 10uF 20% 10V
C752	1-104-601-21	s	ELECT 10uF 20% 10V
C753	1-126-396-11	s	ELECT, CHIP 47uF 20% 16V
C756	1-126-394-11	s	ELECT, CHIP 10uF 20% 16V
C757	1-126-396-11	s	ELECT, CHIP 47uF 20% 16V
C759	1-126-392-11	s	ELECT, CHIP 100uF 20% 6.3V
C760	1-162-638-11	s	CERAMIC, CHIP 1uF 16V

NOTE: Please see page 8-9 for the parts that are not listed in the parts list.

(AD-76 BOARD used for DFS-500)

Ref. No. or Q'ty	Part No.	SP	Description
C763	1-126-392-11	s	ELECT, CHIP 100uF 20% 6.3V
C764	1-162-638-11	s	CERAMIC, CHIP 1uF 16V
C765	1-162-638-11	s	CERAMIC, CHIP 1uF 16V
C766	1-104-601-21	s	ELECT 10uF 20% 10V
C767	1-104-601-21	s	ELECT 10uF 20% 10V
C770	1-126-394-11	s	ELECT, CHIP 10uF 20% 16V
C771	1-126-396-11	s	ELECT, CHIP 47uF 20% 16V
C773	1-126-392-11	s	ELECT, CHIP 100uF 20% 6.3V
C774	1-162-638-11	s	CERAMIC, CHIP 1uF 16V
C777	1-126-392-11	s	ELECT, CHIP 100uF 20% 6.3V
C778	1-162-638-11	s	CERAMIC, CHIP 1uF 16V
C779	1-162-638-11	s	CERAMIC, CHIP 1uF 16V
C786	1-104-601-21	s	ELECT 10uF 20% 10V
C787	1-104-601-21	s	ELECT 10uF 20% 10V
C790	1-126-394-11	s	ELECT, CHIP 10uF 20% 16V
C791	1-126-396-11	s	ELECT, CHIP 47uF 20% 16V
C793	1-126-392-11	s	ELECT, CHIP 100uF 20% 6.3V
C794	1-162-638-11	s	CERAMIC, CHIP 1uF 16V
C797	1-126-392-11	s	ELECT, CHIP 100uF 20% 6.3V
C798	1-162-638-11	s	CERAMIC, CHIP 1uF 16V
C799	1-162-638-11	s	CERAMIC, CHIP 1uF 16V
C801	1-162-638-11	s	CERAMIC, CHIP 1uF 16V
C802	1-126-396-11	s	ELECT, CHIP 47uF 20% 16V
C803	1-126-396-11	s	ELECT, CHIP 47uF 20% 16V
C804	1-163-087-00	s	CERAMIC, CHIP 4PF 50V
C820	1-163-235-11	s	CERAMIC, CHIP 22PF 5% 50V
C840	1-163-235-11	s	CERAMIC, CHIP 22PF 5% 50V
C851	1-104-601-21	s	ELECT 10uF 20% 10V
C852	1-104-601-21	s	ELECT 10uF 20% 10V
C853	1-126-396-11	s	ELECT, CHIP 47uF 20% 16V
C856	1-126-394-11	s	ELECT, CHIP 10uF 20% 16V
C857	1-126-396-11	s	ELECT, CHIP 47uF 20% 16V
C859	1-126-392-11	s	ELECT, CHIP 100uF 20% 6.3V
C860	1-162-638-11	s	CERAMIC, CHIP 1uF 16V
C863	1-126-392-11	s	ELECT, CHIP 100uF 20% 6.3V
C864	1-162-638-11	s	CERAMIC, CHIP 1uF 16V
C865	1-162-638-11	s	CERAMIC, CHIP 1uF 16V
C866	1-104-601-21	s	ELECT 10uF 20% 10V
C867	1-104-601-21	s	ELECT 10uF 20% 10V
C870	1-126-394-11	s	ELECT, CHIP 10uF 20% 16V
C871	1-126-396-11	s	ELECT, CHIP 47uF 20% 16V
C873	1-126-392-11	s	ELECT, CHIP 100uF 20% 6.3V
C874	1-162-638-11	s	CERAMIC, CHIP 1uF 16V
C877	1-126-392-11	s	ELECT, CHIP 100uF 20% 6.3V
C878	1-162-638-11	s	CERAMIC, CHIP 1uF 16V
C879	1-162-638-11	s	CERAMIC, CHIP 1uF 16V
C886	1-104-601-21	s	ELECT 10uF 20% 10V
C887	1-104-601-21	s	ELECT 10uF 20% 10V
C890	1-126-394-11	s	ELECT, CHIP 10uF 20% 16V
C891	1-126-396-11	s	ELECT, CHIP 47uF 20% 16V
C893	1-126-392-11	s	ELECT, CHIP 100uF 20% 6.3V
C894	1-162-638-11	s	CERAMIC, CHIP 1uF 16V
C897	1-126-392-11	s	ELECT, CHIP 100uF 20% 6.3V
C898	1-162-638-11	s	CERAMIC, CHIP 1uF 16V
C899	1-162-638-11	s	CERAMIC, CHIP 1uF 16V
C901	1-162-638-11	s	CERAMIC, CHIP 1uF 16V
C902	1-126-394-11	s	ELECT, CHIP 10uF 20% 16V
C908	1-163-251-11	s	CERAMIC, CHIP 100PF 5% 50V
C909	1-163-251-11	s	CERAMIC, CHIP 100PF 5% 50V

(AD-76 BOARD used for DFS-500)

Ref. No. or Q'ty	Part No.	SP	Description
C911	1-126-392-11	s	ELECT, CHIP 100uF 20% 6.3V
C915	1-163-251-11	s	CERAMIC, CHIP 100PF 5% 50V
C916	1-163-275-11	s	CERAMIC, CHIP 0.001uF 5% 50V
C918	1-163-251-11	s	CERAMIC, CHIP 100PF 5% 50V
C919	1-163-251-11	s	CERAMIC, CHIP 100PF 5% 50V
C922	1-164-004-11	s	CERAMIC, CHIP 0.1uF 10% 25V
C923	1-126-392-11	s	ELECT, CHIP 100uF 20% 6.3V
C927	1-163-275-11	s	CERAMIC, CHIP 0.001uF 5% 50V
C930	1-163-227-11	s	CERAMIC, CHIP 10PF 5% 50V
C939	1-163-235-11	s	CERAMIC, CHIP 22PF 5% 50V
C944	1-164-004-11	s	CERAMIC, CHIP 0.1uF 10% 25V
C945	1-164-004-11	s	CERAMIC, CHIP 0.1uF 10% 25V
C946	1-163-251-11	s	CERAMIC, CHIP 100PF 5% 50V
C952	1-126-396-11	s	ELECT, CHIP 47uF 20% 16V
C953	1-163-137-00	s	CERAMIC, CHIP 680PF 5% 50V
C954	1-164-232-11	s	CERAMIC 0.01uF 10% 100V
C955	1-126-396-11	s	ELECT, CHIP 47uF 20% 16V
C956	1-126-394-11	s	ELECT, CHIP 10uF 20% 16V
C957	1-164-005-11	s	CERAMIC, CHIP 0.47uF 25V
C958	1-164-232-11	s	CERAMIC 0.01uF 10% 100V
C961	1-163-133-00	s	CERAMIC, CHIP 470PF 5% 50V
C962	1-163-224-11	s	CERAMIC 7PF 0.25PF 50V
C963	1-164-232-11	s	CERAMIC 0.01uF 10% 100V
C965	1-163-275-11	s	CERAMIC, CHIP 0.001uF 5% 50V
C968	1-163-239-11	s	CERAMIC, CHIP 33PF 5% 50V
C1001	1-162-638-11	s	CERAMIC, CHIP 1uF 16V
C1002	1-126-394-11	s	ELECT, CHIP 10uF 20% 16V
C1008	1-163-251-11	s	CERAMIC, CHIP 100PF 5% 50V
C1009	1-163-251-11	s	CERAMIC, CHIP 100PF 5% 50V
C1011	1-126-392-11	s	ELECT, CHIP 100uF 20% 6.3V
C1015	1-163-251-11	s	CERAMIC, CHIP 100PF 5% 50V
C1016	1-163-275-11	s	CERAMIC, CHIP 0.001uF 5% 50V
C1018	1-163-251-11	s	CERAMIC, CHIP 100PF 5% 50V
C1019	1-163-251-11	s	CERAMIC, CHIP 100PF 5% 50V
C1022	1-164-004-11	s	CERAMIC, CHIP 0.1uF 10% 25V
C1023	1-126-392-11	s	ELECT, CHIP 100uF 20% 6.3V
C1027	1-163-275-11	s	CERAMIC, CHIP 0.001uF 5% 50V
C1030	1-163-227-11	s	CERAMIC, CHIP 10PF 5% 50V
C1039	1-163-235-11	s	CERAMIC, CHIP 22PF 5% 50V
C1044	1-164-004-11	s	CERAMIC, CHIP 0.1uF 10% 25V
C1045	1-164-004-11	s	CERAMIC, CHIP 0.1uF 10% 25V
C1046	1-163-275-11	s	CERAMIC, CHIP 0.001uF 5% 50V
C1052	1-126-396-11	s	ELECT, CHIP 47uF 20% 16V
C1053	1-163-137-00	s	CERAMIC, CHIP 680PF 5% 50V
C1054	1-164-232-11	s	CERAMIC 0.01uF 10% 100V
C1055	1-126-396-11	s	ELECT, CHIP 47uF 20% 16V
C1056	1-126-394-11	s	ELECT, CHIP 10uF 20% 16V
C1057	1-164-005-11	s	CERAMIC, CHIP 0.47uF 25V
C1058	1-164-232-11	s	CERAMIC 0.01uF 10% 100V
C1061	1-163-133-00	s	CERAMIC, CHIP 470PF 5% 50V
C1062	1-163-224-11	s	CERAMIC 7PF 0.25PF 50V
C1063	1-164-232-11	s	CERAMIC 0.01uF 10% 100V
C1065	1-163-275-11	s	CERAMIC, CHIP 0.001uF 5% 50V
C1068	1-163-239-11	s	CERAMIC, CHIP 33PF 5% 50V
CN19	1-506-748-11	o	CONNECTOR, DIN 96P, MALE
CN20	1-506-748-11	o	CONNECTOR, DIN 96P, MALE
CN21	1-506-748-11	o	CONNECTOR, DIN 96P, MALE
CV101	1-141-229-00	s	CAP, TRIMMER 7PF

NOTE: Please see page 8-9 for the parts that are not listed in the parts list.

(AD-76 BOARD used for DFS-500)

Ref. No. or Q'ty	Part No.	SP	Description
CV201	1-141-229-00	s	CAP, TRIMMER 7PF
D101	8-719-104-34	s	DIODE 1S2835
D102	8-719-104-34	s	DIODE 1S2835
D103	8-719-104-34	s	DIODE 1S2835
D106	8-719-104-34	s	DIODE 1S2835
D107	8-719-104-34	s	DIODE 1S2835
D111	8-719-104-34	s	DIODE 1S2835
D112	8-719-104-34	s	DIODE 1S2835
D113	8-719-104-34	s	DIODE 1S2835
D121	8-719-104-34	s	DIODE 1S2835
D122	8-719-104-34	s	DIODE 1S2835
D123	8-719-105-57	s	DIODE RD3.9M-B1
D124	8-719-157-23	s	DIODE RD4.7M-B
D125	8-719-915-43	s	DIODE, VARICAP FC54M
D126	8-719-915-43	s	DIODE, VARICAP FC54M
D201	8-719-104-34	s	DIODE 1S2835
D202	8-719-104-34	s	DIODE 1S2835
D203	8-719-104-34	s	DIODE 1S2835
D206	8-719-104-34	s	DIODE 1S2835
D207	8-719-104-34	s	DIODE 1S2835
D211	8-719-104-34	s	DIODE 1S2835
D212	8-719-104-34	s	DIODE 1S2835
D213	8-719-104-34	s	DIODE 1S2835
D221	8-719-104-34	s	DIODE 1S2835
D222	8-719-104-34	s	DIODE 1S2835
D223	8-719-105-57	s	DIODE RD3.9M-B1
D224	8-719-157-23	s	DIODE RD4.7M-B
D225	8-719-915-43	s	DIODE, VARICAP FC54M
D226	8-719-915-43	s	DIODE, VARICAP FC54M
D301	8-719-104-34	s	DIODE 1S2835
DL101	1-415-348-21	s	DELAY LINE 280NS
DL102	1-415-309-00	s	DELAY LINE 350nS
DL103	1-415-348-21	s	DELAY LINE 280NS
DL201	1-415-348-21	s	DELAY LINE 280NS
DL202	1-415-309-00	s	DELAY LINE 350nS
DL203	1-415-348-21	s	DELAY LINE 280NS
FL101	1-239-085-11	s	FILTER, LOW-PASS
FL102	1-239-085-11	s	FILTER, LOW-PASS
FL103	1-239-085-11	s	FILTER, LOW-PASS
FL111	1-235-758-11	s	FILTER, LOW-PASS
FL112	1-235-758-11	s	FILTER, LOW-PASS
FL113	1-239-085-11	s	FILTER, LOW-PASS
FL114	1-235-758-11	s	FILTER, LOW-PASS
FL115	1-235-758-11	s	FILTER, LOW-PASS
FL201	1-239-085-11	s	FILTER, LOW-PASS
FL202	1-239-085-11	s	FILTER, LOW-PASS
FL203	1-239-085-11	s	FILTER, LOW-PASS
FL211	1-235-758-11	s	FILTER, LOW-PASS
FL212	1-235-758-11	s	FILTER, LOW-PASS
FL213	1-239-085-11	s	FILTER, LOW-PASS
FL214	1-235-758-11	s	FILTER, LOW-PASS
FL215	1-235-758-11	s	FILTER, LOW-PASS
IC1	8-759-231-53	s	IC TA7805S
IC2	8-759-520-06	s	IC NJM7809FA
IC3	8-759-520-06	s	IC NJM7809FA
IC4	8-759-701-87	s	IC NJM7909FA
IC101	8-759-710-29	s	IC NJM2235M

(AD-76 BOARD used for DFS-500)

Ref. No. or Q'ty	Part No.	SP	Description
IC102	8-759-710-62	s	IC NJM2246M
IC103	8-759-710-29	s	IC NJM2235M
IC104	8-759-710-62	s	IC NJM2246M
IC105	8-759-710-07	s	IC NJM2234M
IC106	8-759-711-32	s	IC NJM2245M
IC107	8-759-710-29	s	IC NJM2235M
IC108	8-759-710-62	s	IC NJM2246M
IC109	8-759-710-07	s	IC NJM2234M
IC110	8-759-711-32	s	IC NJM2245M
IC111	8-759-710-07	s	IC NJM2234M
IC112	8-759-711-32	s	IC NJM2245M
IC113	8-759-925-74	s	IC TC74HC04NS
IC114	8-759-926-99	s	IC SN74HC4075NS
IC115	8-759-926-99	s	IC SN74HC4075NS
IC116	8-759-925-85	s	IC SN74HC32NS
IC117	8-759-925-82	s	IC SN74HC21NS
IC118	8-759-925-85	s	IC SN74HC32NS
IC119	8-759-925-85	s	IC SN74HC32NS
IC120	8-759-925-82	s	IC SN74HC21NS
IC121	8-759-925-74	s	IC TC74HC04NS
IC122	8-752-334-55	s	IC CXD1175M
IC123	8-752-342-61	s	IC CXD2105AQ
IC124	8-759-710-29	s	IC NJM2235M
IC125	8-759-710-07	s	IC NJM2234M
IC126	8-759-987-27	s	IC LM1881M
IC127	8-759-111-69	s	IC UPC1037HA
IC128	8-759-234-77	s	IC TC4S66F
IC129	8-759-983-69	s	IC LM358PS
IC130	8-759-925-90	s	IC SN74HC74NS
IC131	8-759-239-58	s	IC TC74HC221AF
IC132	8-759-926-07	s	IC SN74HC132NS
IC133	8-759-710-29	s	IC NJM2235M
IC134	8-759-980-04	s	IC LM311PS
IC137	8-759-603-54	s	IC M51271FP
IC138	8-759-710-86	s	IC NJM2233BM-T1
IC139	8-759-710-86	s	IC NJM2233BM-T1
IC140	8-759-926-07	s	IC SN74HC132NS
IC141	8-759-980-04	s	IC LM311PS
IC142	8-759-710-62	s	IC NJM2246M
IC143	8-759-711-32	s	IC NJM2245M
IC144	8-759-711-32	s	IC NJM2245M
IC145	8-752-334-55	s	IC CXD1175M
IC146	8-752-334-55	s	IC CXD1175M
IC147	8-752-334-55	s	IC CXD1175M
IC148	8-759-926-82	s	IC SN74HC574ANS
IC149	8-759-926-82	s	IC SN74HC574ANS
IC150	8-759-926-82	s	IC SN74HC574ANS
IC151	8-759-710-29	s	IC NJM2235M
IC152	8-759-980-04	s	IC LM311PS
IC153	8-759-987-27	s	IC LM1881M
IC154	8-759-239-58	s	IC TC74HC221AF
IC155	8-759-239-58	s	IC TC74HC221AF
IC156	8-759-927-46	s	IC SN74HC00NS
IC157	8-759-239-58	s	IC TC74HC221AF
IC158	8-759-926-24	s	IC SN74HC164NS
IC159	8-759-925-90	s	IC SN74HC74NS
IC160	8-759-925-90	s	IC SN74HC74NS
IC161	8-759-927-46	s	IC SN74HC00NS
IC162	8-759-927-46	s	IC SN74HC00NS

NOTE: Please see page 8-9 for the parts that are not listed in the parts list.

(AD-76 BOARD used for DFS-500)

Ref. No. or Q'ty	Part No.	SP	Description
IC163	8-759-925-90	s	IC SN74HC74NS
IC164	8-759-926-23	s	IC SN74HC163NS
IC165	8-759-926-23	s	IC SN74HC163NS
IC166	8-759-926-23	s	IC SN74HC163NS
IC167	8-759-925-74	s	IC TC74HC04NS
IC168	8-759-925-81	s	IC SN74HC20ANS
IC169	8-759-927-46	s	IC SN74HC00NS
IC170	8-759-925-78	s	IC SN74HC10NS
IC171	8-759-239-58	s	IC TC74HC221AF
IC172	8-759-926-29	s	IC SN74HC175NS
IC173	8-759-926-24	s	IC SN74HC164NS
IC174	8-759-927-46	s	IC SN74HC00NS
IC175	8-759-239-58	s	IC TC74HC221AF
IC176	8-749-901-21	s	IC BX1461
IC177	8-759-908-17	s	IC TL082CPS
IC178	8-759-926-48	s	IC SN74HC244NS
IC179	8-759-926-03	s	IC SN74HC113NS
IC201	8-759-710-29	s	IC NJM2235M
IC202	8-759-710-62	s	IC NJM2246M
IC203	8-759-710-29	s	IC NJM2235M
IC204	8-759-710-62	s	IC NJM2246M
IC205	8-759-710-07	s	IC NJM2234M
IC206	8-759-711-32	s	IC NJM2245M
IC207	8-759-710-29	s	IC NJM2235M
IC208	8-759-710-62	s	IC NJM2246M
IC209	8-759-710-07	s	IC NJM2234M
IC210	8-759-711-32	s	IC NJM2245M
IC211	8-759-710-07	s	IC NJM2234M
IC212	8-759-711-32	s	IC NJM2245M
IC213	8-759-925-74	s	IC TC74HC04NS
IC214	8-759-926-99	s	IC SN74HC4075NS
IC215	8-759-926-99	s	IC SN74HC4075NS
IC216	8-759-925-85	s	IC SN74HC32NS
IC217	8-759-925-82	s	IC SN74HC21NS
IC218	8-759-925-85	s	IC SN74HC32NS
IC219	8-759-925-85	s	IC SN74HC32NS
IC220	8-759-925-82	s	IC SN74HC21NS
IC222	8-752-334-55	s	IC CXD1175M
IC223	8-752-342-61	s	IC CXD2105AQ
IC224	8-759-710-29	s	IC NJM2235M
IC225	8-759-710-07	s	IC NJM2234M
IC226	8-759-987-27	s	IC LM1881M
IC227	8-759-111-69	s	IC UPC1037HA
IC228	8-759-234-77	s	IC TC4S66F
IC229	8-759-983-69	s	IC LM358PS
IC230	8-759-925-90	s	IC SN74HC74NS
IC231	8-759-239-58	s	IC TC74HC221AF
IC232	8-759-926-07	s	IC SN74HC132NS
IC233	8-759-710-29	s	IC NJM2235M
IC234	8-759-980-04	s	IC LM311PS
IC237	8-759-603-54	s	IC M51271FP
IC238	8-759-710-86	s	IC NJM2233BM-T1
IC239	8-759-710-86	s	IC NJM2233BM-T1
IC240	8-759-926-07	s	IC SN74HC132NS
IC241	8-759-980-04	s	IC LM311PS
IC242	8-759-710-62	s	IC NJM2246M
IC243	8-759-711-32	s	IC NJM2245M
IC244	8-759-711-32	s	IC NJM2245M
IC245	8-752-334-55	s	IC CXD1175M

(AD-76 BOARD used for DFS-500)

Ref. No. or Q'ty	Part No.	SP	Description
IC246	8-752-334-55	s	IC CXD1175M
IC247	8-752-334-55	s	IC CXD1175M
IC248	8-759-926-82	s	IC SN74HC574ANS
IC249	8-759-926-82	s	IC SN74HC574ANS
IC250	8-759-926-82	s	IC SN74HC574ANS
IC251	8-759-710-29	s	IC NJM2235M
IC252	8-759-980-04	s	IC LM311PS
IC253	8-759-987-27	s	IC LM1881M
IC254	8-759-239-58	s	IC TC74HC221AF
IC255	8-759-239-58	s	IC TC74HC221AF
IC256	8-759-927-46	s	IC SN74HC00NS
IC257	8-759-239-58	s	IC TC74HC221AF
IC258	8-759-926-24	s	IC SN74HC164NS
IC259	8-759-925-90	s	IC SN74HC74NS
IC260	8-759-925-90	s	IC SN74HC74NS
IC261	8-759-927-46	s	IC SN74HC00NS
IC262	8-759-927-46	s	IC SN74HC00NS
IC263	8-759-925-90	s	IC SN74HC74NS
IC264	8-759-926-23	s	IC SN74HC163NS
IC265	8-759-926-23	s	IC SN74HC163NS
IC266	8-759-926-23	s	IC SN74HC163NS
IC267	8-759-925-74	s	IC TC74HC04NS
IC268	8-759-925-81	s	IC SN74HC20ANS
IC269	8-759-927-46	s	IC SN74HC00NS
IC270	8-759-925-78	s	IC SN74HC10NS
IC271	8-759-239-58	s	IC TC74HC221AF
IC272	8-759-926-29	s	IC SN74HC175NS
IC273	8-759-926-24	s	IC SN74HC164NS
IC274	8-759-927-46	s	IC SN74HC00NS
IC275	8-759-239-58	s	IC TC74HC221AF
IC276	8-749-901-21	s	IC BX1461
IC277	8-759-908-17	s	IC TL082CPS
IC278	8-759-926-48	s	IC SN74HC244NS
IC279	8-759-926-03	s	IC SN74HC113NS
IC301	8-759-702-08	s	IC NJM360M
IC302	8-759-925-73	s	IC SN74HC03NS
L1	1-412-525-31	s	INDUCTOR 10uH
L2	1-412-525-31	s	INDUCTOR 10uH
L3	1-412-525-31	s	INDUCTOR 10uH
L101	1-408-789-21	s	INDUCTOR CHIP 100UH
L102	1-408-785-21	s	INDUCTOR CHIP 47UH
L103	1-408-785-21	s	INDUCTOR CHIP 47UH
L104	1-408-789-21	s	INDUCTOR CHIP 100UH
L105	1-408-793-21	s	INDUCTOR CHIP 220UH
L111	1-408-797-11	s	INDUCTOR CHIP 470UH
L112	1-408-785-21	s	INDUCTOR CHIP 47UH
L113	1-408-782-11	s	INDUCTOR CHIP 27UH
L114	1-408-785-21	s	INDUCTOR CHIP 47UH
L115	1-408-782-11	s	INDUCTOR CHIP 27UH
L116	1-408-785-21	s	INDUCTOR CHIP 47UH
L117	1-408-785-21	s	INDUCTOR CHIP 47UH
L118	1-408-785-21	s	INDUCTOR CHIP 47UH
L121	1-408-785-21	s	INDUCTOR CHIP 47UH
L122	1-408-785-21	s	INDUCTOR CHIP 47UH
L123	1-408-785-21	s	INDUCTOR CHIP 47UH
L124	1-408-785-21	s	INDUCTOR CHIP 47UH
L125	1-408-785-21	s	INDUCTOR CHIP 47UH
L126	1-408-785-21	s	INDUCTOR CHIP 47UH

NOTE: Please see page 8-9 for the parts that are not listed in the parts list.

(AD-76 BOARD used for DFS-500)

Ref. No. or Q'ty	Part No.	SP	Description
L131	1-408-793-21	s	INDUCTOR CHIP 220UH
L132	1-408-765-21	s	INDUCTOR, CHIP 1uH
L201	1-408-789-21	s	INDUCTOR CHIP 100UH
L202	1-408-785-21	s	INDUCTOR CHIP 47UH
L203	1-408-785-21	s	INDUCTOR CHIP 47UH
L204	1-408-789-21	s	INDUCTOR CHIP 100UH
L205	1-408-793-21	s	INDUCTOR CHIP 220UH
L211	1-408-797-11	s	INDUCTOR CHIP 470UH
L212	1-408-785-21	s	INDUCTOR CHIP 47UH
L213	1-408-782-11	s	INDUCTOR CHIP 27UH
L214	1-408-785-21	s	INDUCTOR CHIP 47UH
L215	1-408-782-11	s	INDUCTOR CHIP 27UH
L216	1-408-785-21	s	INDUCTOR CHIP 47UH
L217	1-408-785-21	s	INDUCTOR CHIP 47UH
L218	1-408-785-21	s	INDUCTOR CHIP 47UH
L221	1-408-785-21	s	INDUCTOR CHIP 47UH
L222	1-408-785-21	s	INDUCTOR CHIP 47UH
L223	1-408-785-21	s	INDUCTOR CHIP 47UH
L224	1-408-785-21	s	INDUCTOR CHIP 47UH
L225	1-408-785-21	s	INDUCTOR CHIP 47UH
L226	1-408-785-21	s	INDUCTOR CHIP 47UH
L231	1-408-793-21	s	INDUCTOR CHIP 220UH
L232	1-408-765-21	s	INDUCTOR, CHIP 1uH
L301	1-408-789-21	s	INDUCTOR CHIP 100UH
LV101	1-410-286-11	s	INDUCTOR, VAR 1uH
LV201	1-410-286-11	s	INDUCTOR, VAR 1uH
PS1	1-532-637-00	s	LINK, IC 1.0A
PS2	1-532-605-00	s	LINK, IC 0.4A
PS3	1-532-637-00	s	LINK, IC 1.0A
Q101	8-729-120-28	s	TRANSISTOR 2SC1623-L5L6
Q102	8-729-120-28	s	TRANSISTOR 2SC1623-L5L6
Q103	8-729-120-28	s	TRANSISTOR 2SC1623-L5L6
Q104	8-729-116-64	s	TRANSISTOR 2SK508-K51
Q105	8-729-216-22	s	TRANSISTOR 2SA1162
Q106	8-729-120-28	s	TRANSISTOR 2SC1623-L5L6
Q107	8-729-120-28	s	TRANSISTOR 2SC1623-L5L6
Q108	8-729-120-28	s	TRANSISTOR 2SC1623-L5L6
Q111	8-729-120-28	s	TRANSISTOR 2SC1623-L5L6
Q112	8-729-120-28	s	TRANSISTOR 2SC1623-L5L6
Q113	8-729-120-28	s	TRANSISTOR 2SC1623-L5L6
Q114	8-729-120-28	s	TRANSISTOR 2SC1623-L5L6
Q115	8-729-216-22	s	TRANSISTOR 2SA1162
Q121	8-729-120-28	s	TRANSISTOR 2SC1623-L5L6
Q122	8-729-120-28	s	TRANSISTOR 2SC1623-L5L6
Q123	8-729-120-28	s	TRANSISTOR 2SC1623-L5L6
Q124	8-729-120-28	s	TRANSISTOR 2SC1623-L5L6
Q125	8-729-120-28	s	TRANSISTOR 2SC1623-L5L6
Q131	8-729-216-22	s	TRANSISTOR 2SA1162
Q132	8-729-216-22	s	TRANSISTOR 2SA1162
Q133	8-729-120-28	s	TRANSISTOR 2SC1623-L5L6
Q134	8-729-120-28	s	TRANSISTOR 2SC1623-L5L6
Q135	8-729-120-28	s	TRANSISTOR 2SC1623-L5L6
Q136	8-729-216-22	s	TRANSISTOR 2SA1162
Q137	8-729-216-22	s	TRANSISTOR 2SA1162
Q138	8-729-120-28	s	TRANSISTOR 2SC1623-L5L6
Q139	8-729-120-28	s	TRANSISTOR 2SC1623-L5L6
Q140	8-729-120-28	s	TRANSISTOR 2SC1623-L5L6
Q141	8-729-120-28	s	TRANSISTOR 2SC1623-L5L6

(AD-76 BOARD used for DFS-500)

Ref. No. or Q'ty	Part No.	SP	Description
Q151	8-729-120-28	s	TRANSISTOR 2SC1623-L5L6
Q152	8-729-120-28	s	TRANSISTOR 2SC1623-L5L6
Q153	8-729-120-28	s	TRANSISTOR 2SC1623-L5L6
Q154	8-729-120-28	s	TRANSISTOR 2SC1623-L5L6
Q155	8-729-120-28	s	TRANSISTOR 2SC1623-L5L6
Q156	8-729-120-28	s	TRANSISTOR 2SC1623-L5L6
Q157	8-729-120-28	s	TRANSISTOR 2SC1623-L5L6
Q158	8-729-120-28	s	TRANSISTOR 2SC1623-L5L6
Q159	8-729-120-28	s	TRANSISTOR 2SC1623-L5L6
Q160	8-729-120-28	s	TRANSISTOR 2SC1623-L5L6
Q171	8-729-116-64	s	TRANSISTOR 2SK508-K51
Q172	8-729-216-22	s	TRANSISTOR 2SA1162
Q173	8-729-120-28	s	TRANSISTOR 2SC1623-L5L6
Q174	8-729-116-64	s	TRANSISTOR 2SK508-K51
Q175	8-729-216-22	s	TRANSISTOR 2SA1162
Q176	8-729-120-28	s	TRANSISTOR 2SC1623-L5L6
Q177	8-729-116-64	s	TRANSISTOR 2SK508-K51
Q178	8-729-216-22	s	TRANSISTOR 2SA1162
Q179	8-729-120-28	s	TRANSISTOR 2SC1623-L5L6
Q180	8-729-216-22	s	TRANSISTOR 2SA1162
Q191	8-729-120-28	s	TRANSISTOR 2SC1623-L5L6
Q192	8-729-120-28	s	TRANSISTOR 2SC1623-L5L6
Q193	8-729-120-28	s	TRANSISTOR 2SC1623-L5L6
Q201	8-729-120-28	s	TRANSISTOR 2SC1623-L5L6
Q202	8-729-120-28	s	TRANSISTOR 2SC1623-L5L6
Q203	8-729-120-28	s	TRANSISTOR 2SC1623-L5L6
Q204	8-729-116-64	s	TRANSISTOR 2SK508-K51
Q205	8-729-216-22	s	TRANSISTOR 2SA1162
Q206	8-729-120-28	s	TRANSISTOR 2SC1623-L5L6
Q207	8-729-120-28	s	TRANSISTOR 2SC1623-L5L6
Q208	8-729-120-28	s	TRANSISTOR 2SC1623-L5L6
Q211	8-729-120-28	s	TRANSISTOR 2SC1623-L5L6
Q212	8-729-120-28	s	TRANSISTOR 2SC1623-L5L6
Q213	8-729-120-28	s	TRANSISTOR 2SC1623-L5L6
Q214	8-729-120-28	s	TRANSISTOR 2SC1623-L5L6
Q215	8-729-216-22	s	TRANSISTOR 2SA1162
Q221	8-729-120-28	s	TRANSISTOR 2SC1623-L5L6
Q222	8-729-120-28	s	TRANSISTOR 2SC1623-L5L6
Q223	8-729-120-28	s	TRANSISTOR 2SC1623-L5L6
Q224	8-729-120-28	s	TRANSISTOR 2SC1623-L5L6
Q225	8-729-120-28	s	TRANSISTOR 2SC1623-L5L6
Q231	8-729-216-22	s	TRANSISTOR 2SA1162
Q232	8-729-216-22	s	TRANSISTOR 2SA1162
Q233	8-729-120-28	s	TRANSISTOR 2SC1623-L5L6
Q234	8-729-120-28	s	TRANSISTOR 2SC1623-L5L6
Q235	8-729-120-28	s	TRANSISTOR 2SC1623-L5L6
Q236	8-729-216-22	s	TRANSISTOR 2SA1162
Q237	8-729-216-22	s	TRANSISTOR 2SA1162
Q238	8-729-120-28	s	TRANSISTOR 2SC1623-L5L6
Q239	8-729-120-28	s	TRANSISTOR 2SC1623-L5L6
Q240	8-729-120-28	s	TRANSISTOR 2SC1623-L5L6
Q241	8-729-120-28	s	TRANSISTOR 2SC1623-L5L6
Q251	8-729-120-28	s	TRANSISTOR 2SC1623-L5L6
Q252	8-729-120-28	s	TRANSISTOR 2SC1623-L5L6
Q253	8-729-120-28	s	TRANSISTOR 2SC1623-L5L6
Q254	8-729-120-28	s	TRANSISTOR 2SC1623-L5L6
Q255	8-729-120-28	s	TRANSISTOR 2SC1623-L5L6
Q256	8-729-120-28	s	TRANSISTOR 2SC1623-L5L6
Q257	8-729-120-28	s	TRANSISTOR 2SC1623-L5L6

NOTE: Please see page 8-9 for the parts that are not listed in the parts list.

(AD-76 BOARD used for DFS-500)

Ref. No. or Q'ty	Part No.	SP	Description
Q258	8-729-120-28	s	TRANSISTOR 2SC1623-L5L6
Q259	8-729-120-28	s	TRANSISTOR 2SC1623-L5L6
Q260	8-729-120-28	s	TRANSISTOR 2SC1623-L5L6
Q271	8-729-116-64	s	TRANSISTOR 2SK508-K51
Q272	8-729-216-22	s	TRANSISTOR 2SA1162
Q273	8-729-120-28	s	TRANSISTOR 2SC1623-L5L6
Q274	8-729-116-64	s	TRANSISTOR 2SK508-K51
Q275	8-729-216-22	s	TRANSISTOR 2SA1162
Q276	8-729-120-28	s	TRANSISTOR 2SC1623-L5L6
Q277	8-729-116-64	s	TRANSISTOR 2SK508-K51
Q278	8-729-216-22	s	TRANSISTOR 2SA1162
Q279	8-729-120-28	s	TRANSISTOR 2SC1623-L5L6
Q280	8-729-216-22	s	TRANSISTOR 2SA1162
Q291	8-729-120-28	s	TRANSISTOR 2SC1623-L5L6
Q292	8-729-120-28	s	TRANSISTOR 2SC1623-L5L6
Q293	8-729-120-28	s	TRANSISTOR 2SC1623-L5L6
Q301	8-729-120-28	s	TRANSISTOR 2SC1623-L5L6
Q302	8-729-120-28	s	TRANSISTOR 2SC1623-L5L6
Q303	8-729-120-28	s	TRANSISTOR 2SC1623-L5L6
Q304	8-729-116-64	s	TRANSISTOR 2SK508-K51
Q305	8-729-216-22	s	TRANSISTOR 2SA1162
Q306	8-729-120-28	s	TRANSISTOR 2SC1623-L5L6
Q307	8-729-112-65	s	TRANSISTOR 2SA1462-Y33
R1	⚠1-216-377-11	s	METAL 4.7 5% 2W
R2	⚠1-216-377-11	s	METAL 4.7 5% 2W
R3	1-216-371-00	s	METAL 1.5 5% 2W
R4	1-216-371-00	s	METAL 1.5 5% 2W
R5	1-216-377-11	s	METAL 4.7 5% 2W
R12	1-216-695-11	s	METAL, CHIP 68K 0.5% 1/10W
R13	1-216-635-11	s	METAL, CHIP 220 0.5% 1/10W
R14	1-216-691-11	s	METAL, CHIP 47K 0.5% 1/10W
R16	1-216-647-11	s	METAL, CHIP 680 0.5% 1/10W
R19	1-216-663-11	s	METAL, CHIP 3.3K 0.5% 1/10W
R22	1-216-663-11	s	METAL, CHIP 3.3K 0.5% 1/10W
R23	1-216-691-11	s	METAL, CHIP 47K 0.5% 1/10W
R30	1-216-691-11	s	METAL, CHIP 47K 0.5% 1/10W
R32	1-216-679-11	s	METAL, CHIP 15K 0.5% 1/10W
R41	1-216-635-11	s	METAL, CHIP 220 0.5% 1/10W
R42	1-216-679-11	s	METAL, CHIP 15K 0.5% 1/10W
R47	1-216-679-11	s	METAL, CHIP 15K 0.5% 1/10W
R48	1-216-647-11	s	METAL, CHIP 680 0.5% 1/10W
R49	1-216-635-11	s	METAL, CHIP 220 0.5% 1/10W
R105	1-216-635-11	s	METAL, CHIP 220 0.5% 1/10W
R106	1-216-635-11	s	METAL, CHIP 220 0.5% 1/10W
R107	1-216-635-11	s	METAL, CHIP 220 0.5% 1/10W
R108	1-216-635-11	s	METAL, CHIP 220 0.5% 1/10W
R109	1-216-635-11	s	METAL, CHIP 220 0.5% 1/10W
R115	1-216-635-11	s	METAL, CHIP 220 0.5% 1/10W
R116	1-216-635-11	s	METAL, CHIP 220 0.5% 1/10W
R117	1-216-635-11	s	METAL, CHIP 220 0.5% 1/10W
R118	1-216-635-11	s	METAL, CHIP 220 0.5% 1/10W
R119	1-216-635-11	s	METAL, CHIP 220 0.5% 1/10W
R125	1-216-635-11	s	METAL, CHIP 220 0.5% 1/10W
R126	1-216-635-11	s	METAL, CHIP 220 0.5% 1/10W
R127	1-216-635-11	s	METAL, CHIP 220 0.5% 1/10W
R128	1-216-635-11	s	METAL, CHIP 220 0.5% 1/10W
R129	1-216-635-11	s	METAL, CHIP 220 0.5% 1/10W
R135	1-216-635-11	s	METAL, CHIP 220 0.5% 1/10W

(AD-76 BOARD used for DFS-500)

Ref. No. or Q'ty	Part No.	SP	Description
R136	1-216-635-11	s	METAL, CHIP 220 0.5% 1/10W
R137	1-216-635-11	s	METAL, CHIP 220 0.5% 1/10W
R138	1-216-635-11	s	METAL, CHIP 220 0.5% 1/10W
R139	1-216-635-11	s	METAL, CHIP 220 0.5% 1/10W
R145	1-216-603-11	s	METAL, CHIP 10 0.5% 1/10W
R146	1-216-603-11	s	METAL, CHIP 10 0.5% 1/10W
R147	1-216-635-11	s	METAL, CHIP 220 0.5% 1/10W
R148	1-216-635-11	s	METAL, CHIP 220 0.5% 1/10W
R149	1-216-635-11	s	METAL, CHIP 220 0.5% 1/10W
R155	1-216-603-11	s	METAL, CHIP 10 0.5% 1/10W
R156	1-216-603-11	s	METAL, CHIP 10 0.5% 1/10W
R157	1-216-635-11	s	METAL, CHIP 220 0.5% 1/10W
R158	1-216-635-11	s	METAL, CHIP 220 0.5% 1/10W
R159	1-216-635-11	s	METAL, CHIP 220 0.5% 1/10W
R205	1-216-635-11	s	METAL, CHIP 220 0.5% 1/10W
R206	1-216-635-11	s	METAL, CHIP 220 0.5% 1/10W
R207	1-216-635-11	s	METAL, CHIP 220 0.5% 1/10W
R208	1-216-635-11	s	METAL, CHIP 220 0.5% 1/10W
R209	1-216-635-11	s	METAL, CHIP 220 0.5% 1/10W
R215	1-216-635-11	s	METAL, CHIP 220 0.5% 1/10W
R216	1-216-635-11	s	METAL, CHIP 220 0.5% 1/10W
R217	1-216-635-11	s	METAL, CHIP 220 0.5% 1/10W
R218	1-216-635-11	s	METAL, CHIP 220 0.5% 1/10W
R219	1-216-635-11	s	METAL, CHIP 220 0.5% 1/10W
R225	1-216-635-11	s	METAL, CHIP 220 0.5% 1/10W
R226	1-216-635-11	s	METAL, CHIP 220 0.5% 1/10W
R227	1-216-635-11	s	METAL, CHIP 220 0.5% 1/10W
R228	1-216-635-11	s	METAL, CHIP 220 0.5% 1/10W
R229	1-216-635-11	s	METAL, CHIP 220 0.5% 1/10W
R235	1-216-635-11	s	METAL, CHIP 220 0.5% 1/10W
R236	1-216-635-11	s	METAL, CHIP 220 0.5% 1/10W
R237	1-216-635-11	s	METAL, CHIP 220 0.5% 1/10W
R238	1-216-635-11	s	METAL, CHIP 220 0.5% 1/10W
R239	1-216-635-11	s	METAL, CHIP 220 0.5% 1/10W
R245	1-216-603-11	s	METAL, CHIP 10 0.5% 1/10W
R246	1-216-603-11	s	METAL, CHIP 10 0.5% 1/10W
R247	1-216-635-11	s	METAL, CHIP 220 0.5% 1/10W
R248	1-216-635-11	s	METAL, CHIP 220 0.5% 1/10W
R249	1-216-635-11	s	METAL, CHIP 220 0.5% 1/10W
R255	1-216-603-11	s	METAL, CHIP 10 0.5% 1/10W
R256	1-216-603-11	s	METAL, CHIP 10 0.5% 1/10W
R257	1-216-635-11	s	METAL, CHIP 220 0.5% 1/10W
R258	1-216-635-11	s	METAL, CHIP 220 0.5% 1/10W
R259	1-216-635-11	s	METAL, CHIP 220 0.5% 1/10W
R302	1-216-669-11	s	METAL, CHIP 5.6K 0.5% 1/10W
R304	1-216-635-11	s	METAL, CHIP 220 0.5% 1/10W
R305	1-216-611-11	s	METAL, CHIP 22 0.5% 1/10W
R306	1-216-611-11	s	METAL, CHIP 22 0.5% 1/10W
R308	1-216-663-11	s	METAL, CHIP 3.3K 0.5% 1/10W
R309	1-216-639-11	s	METAL, CHIP 330 0.5% 1/10W
R310	1-216-679-11	s	METAL, CHIP 15K 0.5% 1/10W
R311	1-216-673-11	s	METAL, CHIP 8.2K 0.5% 1/10W
R313	1-216-695-11	s	METAL, CHIP 68K 0.5% 1/10W
R314	1-216-663-11	s	METAL, CHIP 3.3K 0.5% 1/10W
R315	1-216-691-11	s	METAL, CHIP 47K 0.5% 1/10W
R316	1-216-687-11	s	METAL, CHIP 33K 0.5% 1/10W
R318	1-216-635-11	s	METAL, CHIP 220 0.5% 1/10W
R319	1-216-679-11	s	METAL, CHIP 15K 0.5% 1/10W
R320	1-216-663-11	s	METAL, CHIP 3.3K 0.5% 1/10W

NOTE: Please see page 8-9 for the parts that are not listed in the parts list.

(AD-76 BOARD used for DFS-500)

Ref. No. or Q'ty	Part No.	SP	Description
R324	1-216-623-11	s	METAL, CHIP 68 0.5% 1/10W
R325	1-216-655-11	s	METAL, CHIP 1.5K 0.5% 1/10W
R327	1-216-683-11	s	METAL, CHIP 22K 0.5% 1/10W
R328	1-216-683-11	s	METAL, CHIP 22K 0.5% 1/10W
R330	1-218-776-11	s	METAL 1M 0.5% 1/10W
R331	1-216-637-11	s	METAL, CHIP 270 0.5% 1/10W
R336	1-216-663-11	s	METAL, CHIP 3.3K 0.5% 1/10W
R337	1-216-663-11	s	METAL, CHIP 3.3K 0.5% 1/10W
R338	1-216-635-11	s	METAL, CHIP 220 0.5% 1/10W
R339	1-216-635-11	s	METAL, CHIP 220 0.5% 1/10W
R342	1-216-669-11	s	METAL, CHIP 5.6K 0.5% 1/10W
R346	1-216-669-11	s	METAL, CHIP 5.6K 0.5% 1/10W
R349	1-216-671-11	s	METAL, CHIP 6.8K 0.5% 1/10W
R350	1-216-657-11	s	METAL, CHIP 1.8K 0.5% 1/10W
R356	1-218-772-11	s	METAL 680K 0.5% 1/10W
R357	1-216-681-11	s	METAL, CHIP 18K 0.5% 1/10W
R359	1-216-663-11	s	METAL, CHIP 3.3K 0.5% 1/10W
R361	1-216-655-11	s	METAL, CHIP 1.5K 0.5% 1/10W
R362	1-216-635-11	s	METAL, CHIP 220 0.5% 1/10W
R365	1-216-697-11	s	METAL, CHIP 82K 0.5% 1/10W
R366	1-216-691-11	s	METAL, CHIP 47K 0.5% 1/10W
R368	1-216-687-11	s	METAL, CHIP 33K 0.5% 1/10W
R369	1-216-683-11	s	METAL, CHIP 22K 0.5% 1/10W
R370	1-218-760-11	s	METAL 220K 0.5% 1/10W
R372	1-216-655-11	s	METAL, CHIP 1.5K 0.5% 1/10W
R373	1-216-643-11	s	METAL, CHIP 470 0.5% 1/10W
R384	1-216-679-11	s	METAL, CHIP 15K 0.5% 1/10W
R389	1-216-697-11	s	METAL, CHIP 82K 0.5% 1/10W
R402	1-216-669-11	s	METAL, CHIP 5.6K 0.5% 1/10W
R404	1-216-635-11	s	METAL, CHIP 220 0.5% 1/10W
R405	1-216-611-11	s	METAL, CHIP 22 0.5% 1/10W
R406	1-216-611-11	s	METAL, CHIP 22 0.5% 1/10W
R408	1-216-663-11	s	METAL, CHIP 3.3K 0.5% 1/10W
R409	1-216-639-11	s	METAL, CHIP 330 0.5% 1/10W
R410	1-216-679-11	s	METAL, CHIP 15K 0.5% 1/10W
R411	1-216-673-11	s	METAL, CHIP 8.2K 0.5% 1/10W
R413	1-216-695-11	s	METAL, CHIP 68K 0.5% 1/10W
R414	1-216-663-11	s	METAL, CHIP 3.3K 0.5% 1/10W
R415	1-216-691-11	s	METAL, CHIP 47K 0.5% 1/10W
R416	1-216-687-11	s	METAL, CHIP 33K 0.5% 1/10W
R418	1-216-635-11	s	METAL, CHIP 220 0.5% 1/10W
R419	1-216-679-11	s	METAL, CHIP 15K 0.5% 1/10W
R420	1-216-663-11	s	METAL, CHIP 3.3K 0.5% 1/10W
R424	1-216-623-11	s	METAL, CHIP 68 0.5% 1/10W
R425	1-216-655-11	s	METAL, CHIP 1.5K 0.5% 1/10W
R427	1-216-683-11	s	METAL, CHIP 22K 0.5% 1/10W
R428	1-216-683-11	s	METAL, CHIP 22K 0.5% 1/10W
R430	1-218-776-11	s	METAL 1M 0.5% 1/10W
R431	1-216-637-11	s	METAL, CHIP 270 0.5% 1/10W
R436	1-216-663-11	s	METAL, CHIP 3.3K 0.5% 1/10W
R437	1-216-663-11	s	METAL, CHIP 3.3K 0.5% 1/10W
R438	1-216-635-11	s	METAL, CHIP 220 0.5% 1/10W
R439	1-216-635-11	s	METAL, CHIP 220 0.5% 1/10W
R442	1-216-669-11	s	METAL, CHIP 5.6K 0.5% 1/10W
R446	1-216-669-11	s	METAL, CHIP 5.6K 0.5% 1/10W
R449	1-216-671-11	s	METAL, CHIP 6.8K 0.5% 1/10W
R450	1-216-657-11	s	METAL, CHIP 1.8K 0.5% 1/10W
R456	1-218-772-11	s	METAL 680K 0.5% 1/10W
R457	1-216-681-11	s	METAL, CHIP 18K 0.5% 1/10W

(AD-76 BOARD used for DFS-500)

Ref. No. or Q'ty	Part No.	SP	Description
R459	1-216-663-11	s	METAL, CHIP 3.3K 0.5% 1/10W
R461	1-216-655-11	s	METAL, CHIP 1.5K 0.5% 1/10W
R462	1-216-635-11	s	METAL, CHIP 220 0.5% 1/10W
R465	1-216-697-11	s	METAL, CHIP 82K 0.5% 1/10W
R466	1-216-691-11	s	METAL, CHIP 47K 0.5% 1/10W
R468	1-216-687-11	s	METAL, CHIP 33K 0.5% 1/10W
R469	1-216-683-11	s	METAL, CHIP 22K 0.5% 1/10W
R470	1-218-760-11	s	METAL 220K 0.5% 1/10W
R472	1-216-655-11	s	METAL, CHIP 1.5K 0.5% 1/10W
R473	1-216-643-11	s	METAL, CHIP 470 0.5% 1/10W
R484	1-216-679-11	s	METAL, CHIP 15K 0.5% 1/10W
R489	1-216-697-11	s	METAL, CHIP 82K 0.5% 1/10W
R501	1-216-635-11	s	METAL, CHIP 220 0.5% 1/10W
R502	1-216-635-11	s	METAL, CHIP 220 0.5% 1/10W
R506	1-216-643-11	s	METAL, CHIP 470 0.5% 1/10W
R510	1-218-760-11	s	METAL 220K 0.5% 1/10W
R513	1-216-635-11	s	METAL, CHIP 220 0.5% 1/10W
R514	1-216-635-11	s	METAL, CHIP 220 0.5% 1/10W
R515	1-216-663-11	s	METAL, CHIP 3.3K 0.5% 1/10W
R516	1-216-609-11	s	METAL, CHIP 18 0.5% 1/10W
R517	1-216-634-11	s	METAL, CHIP 200 0.5% 1/10W
R518	1-216-635-11	s	METAL, CHIP 220 0.5% 1/10W
R522	1-216-649-11	s	METAL, CHIP 820 0.5% 1/10W
R523	1-216-663-11	s	METAL, CHIP 3.3K 0.5% 1/10W
R524	1-216-671-11	s	METAL, CHIP 6.8K 0.5% 1/10W
R526	1-216-653-11	s	METAL, CHIP 1.2K 0.5% 1/10W
R534	1-216-697-11	s	METAL, CHIP 82K 0.5% 1/10W
R540	1-216-673-11	s	METAL, CHIP 8.2K 0.5% 1/10W
R541	1-216-683-11	s	METAL, CHIP 22K 0.5% 1/10W
R543	1-218-768-11	s	METAL 470K 0.5% 1/10W
R544	1-216-619-11	s	METAL, CHIP 47 0.5% 1/10W
R545	1-216-639-11	s	METAL, CHIP 330 0.5% 1/10W
R546	1-216-685-11	s	METAL, CHIP 27K 0.5% 1/10W
R547	1-216-671-11	s	METAL, CHIP 6.8K 0.5% 1/10W
R548	1-216-671-11	s	METAL, CHIP 6.8K 0.5% 1/10W
R550	1-216-683-11	s	METAL, CHIP 22K 0.5% 1/10W
R552	1-216-663-11	s	METAL, CHIP 3.3K 0.5% 1/10W
R553	1-216-683-11	s	METAL, CHIP 22K 0.5% 1/10W
R558	1-216-671-11	s	METAL, CHIP 6.8K 0.5% 1/10W
R560	1-216-671-11	s	METAL, CHIP 6.8K 0.5% 1/10W
R563	1-216-649-11	s	METAL, CHIP 820 0.5% 1/10W
R566	1-216-663-11	s	METAL, CHIP 3.3K 0.5% 1/10W
R570	1-216-671-11	s	METAL, CHIP 6.8K 0.5% 1/10W
R572	1-216-671-11	s	METAL, CHIP 6.8K 0.5% 1/10W
R578	1-216-663-11	s	METAL, CHIP 3.3K 0.5% 1/10W
R581	1-218-776-11	s	METAL 1M 0.5% 1/10W
R584	1-216-635-11	s	METAL, CHIP 220 0.5% 1/10W
R588	1-216-697-11	s	METAL, CHIP 82K 0.5% 1/10W
R589	1-216-663-11	s	METAL, CHIP 3.3K 0.5% 1/10W
R595	1-218-764-11	s	METAL 330K 0.5% 1/10W
R601	1-216-635-11	s	METAL, CHIP 220 0.5% 1/10W
R602	1-216-635-11	s	METAL, CHIP 220 0.5% 1/10W
R606	1-216-643-11	s	METAL, CHIP 470 0.5% 1/10W
R610	1-218-760-11	s	METAL 220K 0.5% 1/10W
R613	1-216-635-11	s	METAL, CHIP 220 0.5% 1/10W
R614	1-216-635-11	s	METAL, CHIP 220 0.5% 1/10W
R615	1-216-663-11	s	METAL, CHIP 3.3K 0.5% 1/10W
R616	1-216-609-11	s	METAL, CHIP 18 0.5% 1/10W
R617	1-216-634-11	s	METAL, CHIP 200 0.5% 1/10W

NOTE: Please see page 8-9 for the parts that are not listed in the parts list.

(AD-76 BOARD used for DFS-500)

Ref. No. or Q'ty	Part No.	SP	Description
R618	1-216-635-11	s	METAL, CHIP 220 0.5% 1/10W
R622	1-216-649-11	s	METAL, CHIP 820 0.5% 1/10W
R623	1-216-663-11	s	METAL, CHIP 3.3K 0.5% 1/10W
R624	1-216-671-11	s	METAL, CHIP 6.8K 0.5% 1/10W
R626	1-216-653-11	s	METAL, CHIP 1.2K 0.5% 1/10W
R634	1-216-697-11	s	METAL, CHIP 82K 0.5% 1/10W
R640	1-216-673-11	s	METAL, CHIP 8.2K 0.5% 1/10W
R641	1-216-683-11	s	METAL, CHIP 22K 0.5% 1/10W
R643	1-218-768-11	s	METAL 470K 0.5% 1/10W
R644	1-216-619-11	s	METAL, CHIP 47 0.5% 1/10W
R645	1-216-639-11	s	METAL, CHIP 330 0.5% 1/10W
R646	1-216-685-11	s	METAL, CHIP 27K 0.5% 1/10W
R647	1-216-671-11	s	METAL, CHIP 6.8K 0.5% 1/10W
R648	1-216-671-11	s	METAL, CHIP 6.8K 0.5% 1/10W
R650	1-216-683-11	s	METAL, CHIP 22K 0.5% 1/10W
R652	1-216-663-11	s	METAL, CHIP 3.3K 0.5% 1/10W
R653	1-216-683-11	s	METAL, CHIP 22K 0.5% 1/10W
R658	1-216-671-11	s	METAL, CHIP 6.8K 0.5% 1/10W
R660	1-216-671-11	s	METAL, CHIP 6.8K 0.5% 1/10W
R663	1-216-649-11	s	METAL, CHIP 820 0.5% 1/10W
R666	1-216-663-11	s	METAL, CHIP 3.3K 0.5% 1/10W
R670	1-216-671-11	s	METAL, CHIP 6.8K 0.5% 1/10W
R672	1-216-671-11	s	METAL, CHIP 6.8K 0.5% 1/10W
R678	1-216-663-11	s	METAL, CHIP 3.3K 0.5% 1/10W
R681	1-218-776-11	s	METAL 1M 0.5% 1/10W
R684	1-216-635-11	s	METAL, CHIP 220 0.5% 1/10W
R688	1-216-697-11	s	METAL, CHIP 82K 0.5% 1/10W
R689	1-216-663-11	s	METAL, CHIP 3.3K 0.5% 1/10W
R695	1-218-764-11	s	METAL 330K 0.5% 1/10W
R702	1-216-669-11	s	METAL, CHIP 5.6K 0.5% 1/10W
R704	1-216-635-11	s	METAL, CHIP 220 0.5% 1/10W
R705	1-216-663-11	s	METAL, CHIP 3.3K 0.5% 1/10W
R706	1-216-635-11	s	METAL, CHIP 220 0.5% 1/10W
R707	1-216-635-11	s	METAL, CHIP 220 0.5% 1/10W
R711	1-216-663-11	s	METAL, CHIP 3.3K 0.5% 1/10W
R714	1-216-671-11	s	METAL, CHIP 6.8K 0.5% 1/10W
R720	1-216-655-11	s	METAL, CHIP 1.5K 0.5% 1/10W
R723	1-216-635-11	s	METAL, CHIP 220 0.5% 1/10W
R725	1-216-649-11	s	METAL, CHIP 820 0.5% 1/10W
R727	1-216-663-11	s	METAL, CHIP 3.3K 0.5% 1/10W
R729	1-216-663-11	s	METAL, CHIP 3.3K 0.5% 1/10W
R740	1-216-655-11	s	METAL, CHIP 1.5K 0.5% 1/10W
R743	1-216-635-11	s	METAL, CHIP 220 0.5% 1/10W
R745	1-216-649-11	s	METAL, CHIP 820 0.5% 1/10W
R747	1-216-663-11	s	METAL, CHIP 3.3K 0.5% 1/10W
R749	1-216-663-11	s	METAL, CHIP 3.3K 0.5% 1/10W
R751	1-216-635-11	s	METAL, CHIP 220 0.5% 1/10W
R752	1-216-635-11	s	METAL, CHIP 220 0.5% 1/10W
R753	1-216-643-11	s	METAL, CHIP 470 0.5% 1/10W
R754	1-216-691-11	s	METAL, CHIP 47K 0.5% 1/10W
R755	1-216-691-11	s	METAL, CHIP 47K 0.5% 1/10W
R756	1-216-635-11	s	METAL, CHIP 220 0.5% 1/10W
R757	1-216-679-11	s	METAL, CHIP 15K 0.5% 1/10W
R758	1-216-663-11	s	METAL, CHIP 3.3K 0.5% 1/10W
R759	1-216-671-11	s	METAL, CHIP 6.8K 0.5% 1/10W
R761	1-216-643-11	s	METAL, CHIP 470 0.5% 1/10W
R766	1-216-635-11	s	METAL, CHIP 220 0.5% 1/10W
R767	1-216-635-11	s	METAL, CHIP 220 0.5% 1/10W
R768	1-216-691-11	s	METAL, CHIP 47K 0.5% 1/10W

(AD-76 BOARD used for DFS-500)

Ref. No. or Q'ty	Part No.	SP	Description
R769	1-216-689-11	s	METAL, CHIP 39K 0.5% 1/10W
R770	1-216-635-11	s	METAL, CHIP 220 0.5% 1/10W
R771	1-216-679-11	s	METAL, CHIP 15K 0.5% 1/10W
R772	1-216-663-11	s	METAL, CHIP 3.3K 0.5% 1/10W
R773	1-216-663-11	s	METAL, CHIP 3.3K 0.5% 1/10W
R775	1-216-663-11	s	METAL, CHIP 3.3K 0.5% 1/10W
R786	1-216-635-11	s	METAL, CHIP 220 0.5% 1/10W
R787	1-216-635-11	s	METAL, CHIP 220 0.5% 1/10W
R788	1-216-691-11	s	METAL, CHIP 47K 0.5% 1/10W
R789	1-216-689-11	s	METAL, CHIP 39K 0.5% 1/10W
R790	1-216-635-11	s	METAL, CHIP 220 0.5% 1/10W
R791	1-216-679-11	s	METAL, CHIP 15K 0.5% 1/10W
R792	1-216-663-11	s	METAL, CHIP 3.3K 0.5% 1/10W
R793	1-216-663-11	s	METAL, CHIP 3.3K 0.5% 1/10W
R795	1-216-663-11	s	METAL, CHIP 3.3K 0.5% 1/10W
R798	1-216-679-11	s	METAL, CHIP 15K 0.5% 1/10W
R802	1-216-669-11	s	METAL, CHIP 5.6K 0.5% 1/10W
R804	1-216-635-11	s	METAL, CHIP 220 0.5% 1/10W
R805	1-216-663-11	s	METAL, CHIP 3.3K 0.5% 1/10W
R806	1-216-635-11	s	METAL, CHIP 220 0.5% 1/10W
R807	1-216-635-11	s	METAL, CHIP 220 0.5% 1/10W
R811	1-216-663-11	s	METAL, CHIP 3.3K 0.5% 1/10W
R814	1-216-671-11	s	METAL, CHIP 6.8K 0.5% 1/10W
R820	1-216-655-11	s	METAL, CHIP 1.5K 0.5% 1/10W
R823	1-216-635-11	s	METAL, CHIP 220 0.5% 1/10W
R825	1-216-649-11	s	METAL, CHIP 820 0.5% 1/10W
R827	1-216-663-11	s	METAL, CHIP 3.3K 0.5% 1/10W
R829	1-216-663-11	s	METAL, CHIP 3.3K 0.5% 1/10W
R840	1-216-655-11	s	METAL, CHIP 1.5K 0.5% 1/10W
R843	1-216-635-11	s	METAL, CHIP 220 0.5% 1/10W
R845	1-216-649-11	s	METAL, CHIP 820 0.5% 1/10W
R847	1-216-663-11	s	METAL, CHIP 3.3K 0.5% 1/10W
R849	1-216-663-11	s	METAL, CHIP 3.3K 0.5% 1/10W
R851	1-216-635-11	s	METAL, CHIP 220 0.5% 1/10W
R852	1-216-635-11	s	METAL, CHIP 220 0.5% 1/10W
R853	1-216-643-11	s	METAL, CHIP 470 0.5% 1/10W
R854	1-216-691-11	s	METAL, CHIP 47K 0.5% 1/10W
R855	1-216-691-11	s	METAL, CHIP 47K 0.5% 1/10W
R856	1-216-635-11	s	METAL, CHIP 220 0.5% 1/10W
R857	1-216-679-11	s	METAL, CHIP 15K 0.5% 1/10W
R858	1-216-663-11	s	METAL, CHIP 3.3K 0.5% 1/10W
R859	1-216-671-11	s	METAL, CHIP 6.8K 0.5% 1/10W
R861	1-216-643-11	s	METAL, CHIP 470 0.5% 1/10W
R866	1-216-635-11	s	METAL, CHIP 220 0.5% 1/10W
R867	1-216-635-11	s	METAL, CHIP 220 0.5% 1/10W
R868	1-216-691-11	s	METAL, CHIP 47K 0.5% 1/10W
R869	1-216-689-11	s	METAL, CHIP 39K 0.5% 1/10W
R870	1-216-635-11	s	METAL, CHIP 220 0.5% 1/10W
R871	1-216-679-11	s	METAL, CHIP 15K 0.5% 1/10W
R872	1-216-663-11	s	METAL, CHIP 3.3K 0.5% 1/10W
R873	1-216-663-11	s	METAL, CHIP 3.3K 0.5% 1/10W
R875	1-216-663-11	s	METAL, CHIP 3.3K 0.5% 1/10W
R886	1-216-635-11	s	METAL, CHIP 220 0.5% 1/10W
R887	1-216-635-11	s	METAL, CHIP 220 0.5% 1/10W
R888	1-216-691-11	s	METAL, CHIP 47K 0.5% 1/10W
R889	1-216-689-11	s	METAL, CHIP 39K 0.5% 1/10W
R890	1-216-635-11	s	METAL, CHIP 220 0.5% 1/10W
R891	1-216-679-11	s	METAL, CHIP 15K 0.5% 1/10W
R892	1-216-663-11	s	METAL, CHIP 3.3K 0.5% 1/10W

NOTE: Please see page 8-9 for the parts that are not listed in the parts list.

(AD-76 BOARD used for DFS-500)

Ref. No. or Q'ty	Part No.	SP	Description
R893	1-216-663-11	s	METAL, CHIP 3.3K 0.5% 1/10W
R895	1-216-663-11	s	METAL, CHIP 3.3K 0.5% 1/10W
R898	1-216-679-11	s	METAL, CHIP 15K 0.5% 1/10W
R904	1-216-663-11	s	METAL, CHIP 3.3K 0.5% 1/10W
R905	1-216-663-11	s	METAL, CHIP 3.3K 0.5% 1/10W
R913	1-218-764-11	s	METAL 330K 0.5% 1/10W
R917	1-216-657-11	s	METAL, CHIP 1.8K 0.5% 1/10W
R919	1-218-772-11	s	METAL 680K 0.5% 1/10W
R920	1-216-687-11	s	METAL, CHIP 33K 0.5% 1/10W
R921	1-216-689-11	s	METAL, CHIP 39K 0.5% 1/10W
R924	1-216-669-11	s	METAL, CHIP 5.6K 0.5% 1/10W
R925	1-216-685-11	s	METAL, CHIP 27K 0.5% 1/10W
R936	1-216-679-11	s	METAL, CHIP 15K 0.5% 1/10W
R937	1-218-754-11	s	METAL, CHIP 120K 0.50% 1/10W
R941	1-216-677-11	s	METAL, CHIP 12K 0.5% 1/10W
R942	1-218-760-11	s	METAL 220K 0.5% 1/10W
R944	1-216-691-11	s	METAL, CHIP 47K 0.5% 1/10W
R949	1-216-683-11	s	METAL, CHIP 22K 0.5% 1/10W
R950	1-216-687-11	s	METAL, CHIP 33K 0.5% 1/10W
R951	1-216-683-11	s	METAL, CHIP 22K 0.5% 1/10W
R952	1-216-635-11	s	METAL, CHIP 220 0.5% 1/10W
R953	1-216-635-11	s	METAL, CHIP 220 0.5% 1/10W
R954	1-218-760-11	s	METAL 220K 0.5% 1/10W
R955	1-218-764-11	s	METAL 330K 0.5% 1/10W
R956	1-216-623-11	s	METAL, CHIP 68 0.5% 1/10W
R957	1-216-635-11	s	METAL, CHIP 220 0.5% 1/10W
R958	1-216-623-11	s	METAL, CHIP 68 0.5% 1/10W
R1013	1-218-764-11	s	METAL 330K 0.5% 1/10W
R1017	1-216-657-11	s	METAL, CHIP 1.8K 0.5% 1/10W
R1019	1-218-772-11	s	METAL 680K 0.5% 1/10W
R1020	1-216-687-11	s	METAL, CHIP 33K 0.5% 1/10W
R1021	1-216-689-11	s	METAL, CHIP 39K 0.5% 1/10W
R1024	1-216-669-11	s	METAL, CHIP 5.6K 0.5% 1/10W
R1025	1-216-685-11	s	METAL, CHIP 27K 0.5% 1/10W
R1036	1-216-679-11	s	METAL, CHIP 15K 0.5% 1/10W
R1037	1-218-754-11	s	METAL, CHIP 120K 0.50% 1/10W
R1041	1-216-677-11	s	METAL, CHIP 12K 0.5% 1/10W
R1042	1-218-760-11	s	METAL 220K 0.5% 1/10W
R1043	1-216-687-11	s	METAL, CHIP 33K 0.5% 1/10W
R1044	1-216-691-11	s	METAL, CHIP 47K 0.5% 1/10W
R1049	1-216-683-11	s	METAL, CHIP 22K 0.5% 1/10W
R1050	1-216-687-11	s	METAL, CHIP 33K 0.5% 1/10W
R1051	1-216-683-11	s	METAL, CHIP 22K 0.5% 1/10W
R1052	1-216-635-11	s	METAL, CHIP 220 0.5% 1/10W
R1053	1-216-635-11	s	METAL, CHIP 220 0.5% 1/10W
R1054	1-218-760-11	s	METAL 220K 0.5% 1/10W
R1055	1-218-764-11	s	METAL 330K 0.5% 1/10W
R1056	1-216-623-11	s	METAL, CHIP 68 0.5% 1/10W
R1057	1-216-635-11	s	METAL, CHIP 220 0.5% 1/10W
R1058	1-216-623-11	s	METAL, CHIP 68 0.5% 1/10W
RB1	1-231-385-00	s	RESISTOR BLOCK 4.7Kx8
RB2	1-231-385-00	s	RESISTOR BLOCK 4.7Kx8
RB3	1-231-385-00	s	RESISTOR BLOCK 4.7Kx8
RB101	1-231-385-00	s	RESISTOR BLOCK 4.7Kx8
RB102	1-231-385-00	s	RESISTOR BLOCK 4.7Kx8
RB103	1-231-385-00	s	RESISTOR BLOCK 4.7Kx8
RV101	1-228-993-00	s	RES, ADJ METAL 4.7K
RV102	1-228-993-00	s	RES, ADJ METAL 4.7K

NOTE: Please see page 8-9 for the parts that are not listed in the parts list.

(AD-76 BOARD used for DFS-500)

Ref. No. or Q'ty	Part No.	SP	Description
RV103	1-228-994-00	s	RES, ADJ METAL 10K
RV111	1-230-504-11	s	RES, ADJ METAL 220
RV112	1-228-990-00	s	RES, ADJ METAL 1K
RV113	1-228-993-00	s	RES, ADJ METAL 4.7K
RV114	1-228-989-00	s	RES, ADJ METAL 470
RV115	1-228-989-00	s	RES, ADJ METAL 470
RV116	1-228-990-00	s	RES, ADJ METAL 1K
RV117	1-230-504-11	s	RES, ADJ METAL 220
RV118	1-228-989-00	s	RES, ADJ METAL 470
RV119	1-228-989-00	s	RES, ADJ METAL 470
RV121	1-228-989-00	s	RES, ADJ METAL 470
RV122	1-228-989-00	s	RES, ADJ METAL 470
RV123	1-228-989-00	s	RES, ADJ METAL 470
RV131	1-228-993-00	s	RES, ADJ METAL 4.7K
RV201	1-228-993-00	s	RES, ADJ METAL 4.7K
RV202	1-228-993-00	s	RES, ADJ METAL 4.7K
RV203	1-228-994-00	s	RES, ADJ METAL 10K
RV211	1-230-504-11	s	RES, ADJ METAL 220
RV212	1-228-990-00	s	RES, ADJ METAL 1K
RV213	1-228-993-00	s	RES, ADJ METAL 4.7K
RV214	1-228-989-00	s	RES, ADJ METAL 470
RV215	1-228-989-00	s	RES, ADJ METAL 470
RV216	1-228-990-00	s	RES, ADJ METAL 1K
RV217	1-230-504-11	s	RES, ADJ METAL 220
RV218	1-228-989-00	s	RES, ADJ METAL 470
RV219	1-228-989-00	s	RES, ADJ METAL 470
RV221	1-228-989-00	s	RES, ADJ METAL 470
RV222	1-228-989-00	s	RES, ADJ METAL 470
RV223	1-228-989-00	s	RES, ADJ METAL 470
RV231	1-228-993-00	s	RES, ADJ METAL 4.7K
RV301	1-237-503-21	s	RES, ADJ METAL 10K
RV302	1-228-990-00	s	RES, ADJ METAL 1K
S1	1-570-514-11	s	SWITCH, SLIDE
S2	1-570-514-11	s	SWITCH, SLIDE
S3	1-570-514-11	s	SWITCH, SLIDE
S4	1-570-514-11	s	SWITCH, SLIDE
X101	1-577-089-11	s	VCO, CRYSTAL 14.318180MHz
X102	1-567-866-11	s	CRYSTAL, 14.31818MHz
X201	1-577-089-11	s	VCO, CRYSTAL 14.318180MHz
X202	1-567-866-11	s	CRYSTAL, 14.31818MHz

AD-76P BOARD used for DFS-500P

Ref. No. or Q'ty	Part No.	SP	Description
1pc	A-8271-697-A	o	MOUNTED CIRCUIT BOARD, AD-76P
2pcs	3-166-184-01	o	LEVER, PC BOARD
2pcs	3-166-185-01	s	NUT, PLATE
1pc	3-178-157-01	o	PLATE, SHIELD
8pcs	4-886-821-11	s	SCREW, S TIGHT, +PTTWH 3X6
2pcs	7-622-207-05	s	N 2.6, TYPE 2
2pcs	7-626-320-11	s	PIN, SPRING 3X8
6pcs	7-628-254-40	s	SCREW +PS 2.6X12
C1	1-126-934-11	s	ELECT 220uF 20% 16V
C2	1-162-638-11	s	CERAMIC, CHIP 1uF 16V
C3	1-126-934-11	s	ELECT 220uF 20% 16V
C4	1-162-638-11	s	CERAMIC, CHIP 1uF 16V
C5	1-126-934-11	s	ELECT 220uF 20% 16V
C6	1-162-638-11	s	CERAMIC, CHIP 1uF 16V
C7	1-162-638-11	s	CERAMIC, CHIP 1uF 16V
C8	1-126-392-11	s	ELECT, CHIP 100uF 20% 6.3V
C9	1-126-934-11	s	ELECT 220uF 20% 16V
C10	1-162-638-11	s	CERAMIC, CHIP 1uF 16V
C11	1-162-638-11	s	CERAMIC, CHIP 1uF 16V
C12	1-126-396-11	s	ELECT, CHIP 47uF 20% 16V
C13	1-126-934-11	s	ELECT 220uF 20% 16V
C14	1-162-638-11	s	CERAMIC, CHIP 1uF 16V
C15	1-162-638-11	s	CERAMIC, CHIP 1uF 16V
C16	1-126-396-11	s	ELECT, CHIP 47uF 20% 16V
C17	1-126-934-11	s	ELECT 220uF 20% 16V
C18	1-162-638-11	s	CERAMIC, CHIP 1uF 16V
C19	1-126-934-11	s	ELECT 220uF 20% 16V
C20	1-162-638-11	s	CERAMIC, CHIP 1uF 16V
C21	1-126-934-11	s	ELECT 220uF 20% 16V
C22	1-162-638-11	s	CERAMIC, CHIP 1uF 16V
C23	1-162-638-11	s	CERAMIC, CHIP 1uF 16V
C24	1-126-396-11	s	ELECT, CHIP 47uF 20% 16V
C25	1-126-925-11	s	ELECT 470uF 20% 10V
C26	1-162-638-11	s	CERAMIC, CHIP 1uF 16V
C27	1-126-925-11	s	ELECT 470uF 20% 10V
C28	1-162-638-11	s	CERAMIC, CHIP 1uF 16V
C31	1-126-394-11	s	ELECT, CHIP 10uF 20% 16V
C35	1-163-227-11	s	CERAMIC, CHIP 10PF 5% 50V
C36	1-126-394-11	s	ELECT, CHIP 10uF 20% 16V
C37	1-126-396-11	s	ELECT, CHIP 47uF 20% 16V
C39	1-163-235-11	s	CERAMIC, CHIP 22PF 5% 50V
C41	1-126-392-11	s	ELECT, CHIP 100uF 20% 6.3V
C101	1-126-394-11	s	ELECT, CHIP 10uF 20% 16V
C102	1-126-394-11	s	ELECT, CHIP 10uF 20% 16V
C103	1-162-638-11	s	CERAMIC, CHIP 1uF 16V
C104	1-126-394-11	s	ELECT, CHIP 10uF 20% 16V
C105	1-126-394-11	s	ELECT, CHIP 10uF 20% 16V
C106	1-126-394-11	s	ELECT, CHIP 10uF 20% 16V
C107	1-126-396-11	s	ELECT, CHIP 47uF 20% 16V
C109	1-126-394-11	s	ELECT, CHIP 10uF 20% 16V
C110	1-126-394-11	s	ELECT, CHIP 10uF 20% 16V
C111	1-162-638-11	s	CERAMIC, CHIP 1uF 16V
C112	1-126-394-11	s	ELECT, CHIP 10uF 20% 16V
C113	1-126-394-11	s	ELECT, CHIP 10uF 20% 16V
C114	1-126-394-11	s	ELECT, CHIP 10uF 20% 16V
C115	1-126-396-11	s	ELECT, CHIP 47uF 20% 16V
C117	1-126-394-11	s	ELECT, CHIP 10uF 20% 16V
C118	1-126-394-11	s	ELECT, CHIP 10uF 20% 16V

(AD-76P BOARD used for DFS-500P)

Ref. No. or Q'ty	Part No.	SP	Description
C119	1-162-638-11	s	CERAMIC, CHIP 1uF 16V
C120	1-126-394-11	s	ELECT, CHIP 10uF 20% 16V
C121	1-126-394-11	s	ELECT, CHIP 10uF 20% 16V
C122	1-126-394-11	s	ELECT, CHIP 10uF 20% 16V
C123	1-126-396-11	s	ELECT, CHIP 47uF 20% 16V
C125	1-126-394-11	s	ELECT, CHIP 10uF 20% 16V
C126	1-126-394-11	s	ELECT, CHIP 10uF 20% 16V
C127	1-162-638-11	s	CERAMIC, CHIP 1uF 16V
C128	1-126-394-11	s	ELECT, CHIP 10uF 20% 16V
C129	1-126-394-11	s	ELECT, CHIP 10uF 20% 16V
C130	1-126-394-11	s	ELECT, CHIP 10uF 20% 16V
C131	1-126-396-11	s	ELECT, CHIP 47uF 20% 16V
C133	1-126-394-11	s	ELECT, CHIP 10uF 20% 16V
C134	1-126-394-11	s	ELECT, CHIP 10uF 20% 16V
C135	1-162-638-11	s	CERAMIC, CHIP 1uF 16V
C136	1-126-394-11	s	ELECT, CHIP 10uF 20% 16V
C137	1-126-394-11	s	ELECT, CHIP 10uF 20% 16V
C138	1-126-394-11	s	ELECT, CHIP 10uF 20% 16V
C139	1-126-396-11	s	ELECT, CHIP 47uF 20% 16V
C141	1-126-394-11	s	ELECT, CHIP 10uF 20% 16V
C142	1-126-394-11	s	ELECT, CHIP 10uF 20% 16V
C143	1-162-638-11	s	CERAMIC, CHIP 1uF 16V
C144	1-126-394-11	s	ELECT, CHIP 10uF 20% 16V
C145	1-126-394-11	s	ELECT, CHIP 10uF 20% 16V
C146	1-126-394-11	s	ELECT, CHIP 10uF 20% 16V
C147	1-126-396-11	s	ELECT, CHIP 47uF 20% 16V
C201	1-126-394-11	s	ELECT, CHIP 10uF 20% 16V
C202	1-126-394-11	s	ELECT, CHIP 10uF 20% 16V
C203	1-162-638-11	s	CERAMIC, CHIP 1uF 16V
C204	1-126-394-11	s	ELECT, CHIP 10uF 20% 16V
C205	1-126-394-11	s	ELECT, CHIP 10uF 20% 16V
C206	1-126-394-11	s	ELECT, CHIP 10uF 20% 16V
C207	1-126-396-11	s	ELECT, CHIP 47uF 20% 16V
C209	1-126-394-11	s	ELECT, CHIP 10uF 20% 16V
C210	1-126-394-11	s	ELECT, CHIP 10uF 20% 16V
C211	1-162-638-11	s	CERAMIC, CHIP 1uF 16V
C212	1-126-394-11	s	ELECT, CHIP 10uF 20% 16V
C213	1-126-394-11	s	ELECT, CHIP 10uF 20% 16V
C214	1-126-394-11	s	ELECT, CHIP 10uF 20% 16V
C215	1-126-396-11	s	ELECT, CHIP 47uF 20% 16V
C217	1-126-394-11	s	ELECT, CHIP 10uF 20% 16V
C218	1-126-394-11	s	ELECT, CHIP 10uF 20% 16V
C219	1-162-638-11	s	CERAMIC, CHIP 1uF 16V
C220	1-126-394-11	s	ELECT, CHIP 10uF 20% 16V
C221	1-126-394-11	s	ELECT, CHIP 10uF 20% 16V
C222	1-126-394-11	s	ELECT, CHIP 10uF 20% 16V
C223	1-126-396-11	s	ELECT, CHIP 47uF 20% 16V
C225	1-126-394-11	s	ELECT, CHIP 10uF 20% 16V
C226	1-126-394-11	s	ELECT, CHIP 10uF 20% 16V
C227	1-162-638-11	s	CERAMIC, CHIP 1uF 16V
C228	1-126-394-11	s	ELECT, CHIP 10uF 20% 16V
C229	1-126-394-11	s	ELECT, CHIP 10uF 20% 16V
C230	1-126-394-11	s	ELECT, CHIP 10uF 20% 16V
C231	1-126-396-11	s	ELECT, CHIP 47uF 20% 16V
C233	1-126-394-11	s	ELECT, CHIP 10uF 20% 16V
C234	1-126-394-11	s	ELECT, CHIP 10uF 20% 16V
C235	1-162-638-11	s	CERAMIC, CHIP 1uF 16V
C236	1-126-394-11	s	ELECT, CHIP 10uF 20% 16V
C237	1-126-394-11	s	ELECT, CHIP 10uF 20% 16V

NOTE: Please see page 8-9 for the parts that are not listed in the parts list.

(AD-76P BOARD used for DFS-500P)

Ref. No. or Q'ty	Part No.	SP	Description
C238	1-126-394-11	s	ELECT, CHIP 10uF 20% 16V
C239	1-126-396-11	s	ELECT, CHIP 47uF 20% 16V
C241	1-126-394-11	s	ELECT, CHIP 10uF 20% 16V
C242	1-126-394-11	s	ELECT, CHIP 10uF 20% 16V
C243	1-162-638-11	s	CERAMIC, CHIP 1uF 16V
C244	1-126-394-11	s	ELECT, CHIP 10uF 20% 16V
C245	1-126-394-11	s	ELECT, CHIP 10uF 20% 16V
C246	1-126-394-11	s	ELECT, CHIP 10uF 20% 16V
C247	1-126-396-11	s	ELECT, CHIP 47uF 20% 16V
C301	1-163-222-11	s	CERAMIC, CHIP 5PF 50V
C302	1-163-222-11	s	CERAMIC, CHIP 5PF 50V
C304	1-163-227-11	s	CERAMIC, CHIP 10PF 5% 50V
C305	1-126-394-11	s	ELECT, CHIP 10uF 20% 16V
C306	1-126-396-11	s	ELECT, CHIP 47uF 20% 16V
C307	1-162-638-11	s	CERAMIC, CHIP 1uF 16V
C309	1-126-396-11	s	ELECT, CHIP 47uF 20% 16V
C310	1-126-392-11	s	ELECT, CHIP 100uF 20% 6.3V
C311	1-126-392-11	s	ELECT, CHIP 100uF 20% 6.3V
C312	1-126-392-11	s	ELECT, CHIP 100uF 20% 6.3V
C313	1-162-638-11	s	CERAMIC, CHIP 1uF 16V
C318	1-163-133-00	s	CERAMIC, CHIP 470PF 5% 50V
C319	1-126-394-11	s	ELECT, CHIP 10uF 20% 16V
C321	1-126-392-11	s	ELECT, CHIP 100uF 20% 6.3V
C332	1-163-224-11	s	CERAMIC 7PF 0.25PF 50V
C341	1-126-394-11	s	ELECT, CHIP 10uF 20% 16V
C342	1-126-394-11	s	ELECT, CHIP 10uF 20% 16V
C343	1-126-394-11	s	ELECT, CHIP 10uF 20% 16V
C344	1-126-394-11	s	ELECT, CHIP 10uF 20% 16V
C347	1-126-396-11	s	ELECT, CHIP 47uF 20% 16V
C351	1-163-227-11	s	CERAMIC, CHIP 10PF 5% 50V
C352	1-163-251-11	s	CERAMIC, CHIP 100PF 5% 50V
C353	1-163-251-11	s	CERAMIC, CHIP 100PF 5% 50V
C355	1-126-392-11	s	ELECT, CHIP 100uF 20% 6.3V
C359	1-164-232-11	s	CERAMIC 0.01uF 10% 100V
C361	1-126-394-11	s	ELECT, CHIP 10uF 20% 16V
C363	1-163-035-00	s	CERAMIC, CHIP 0.047uF 50V
C366	1-162-638-11	s	CERAMIC, CHIP 1uF 16V
C367	1-126-392-11	s	ELECT, CHIP 100uF 20% 6.3V
C370	1-164-232-11	s	CERAMIC 0.01uF 10% 100V
C371	1-164-232-11	s	CERAMIC 0.01uF 10% 100V
C382	1-163-251-11	s	CERAMIC, CHIP 100PF 5% 50V
C383	1-163-251-11	s	CERAMIC, CHIP 100PF 5% 50V
C385	1-163-239-11	s	CERAMIC, CHIP 33PF 5% 50V
C386	1-163-239-11	s	CERAMIC, CHIP 33PF 5% 50V
C387	1-163-239-11	s	CERAMIC, CHIP 33PF 5% 50V
C388	1-163-121-00	s	CERAMIC, CHIP 150PF 5% 50V
C401	1-163-222-11	s	CERAMIC, CHIP 5PF 50V
C402	1-163-222-11	s	CERAMIC, CHIP 5PF 50V
C404	1-163-227-11	s	CERAMIC, CHIP 10PF 5% 50V
C405	1-126-394-11	s	ELECT, CHIP 10uF 20% 16V
C406	1-126-396-11	s	ELECT, CHIP 47uF 20% 16V
C407	1-162-638-11	s	CERAMIC, CHIP 1uF 16V
C409	1-126-396-11	s	ELECT, CHIP 47uF 20% 16V
C410	1-126-392-11	s	ELECT, CHIP 100uF 20% 6.3V
C411	1-126-392-11	s	ELECT, CHIP 100uF 20% 6.3V
C412	1-126-392-11	s	ELECT, CHIP 100uF 20% 6.3V
C413	1-162-638-11	s	CERAMIC, CHIP 1uF 16V
C418	1-163-133-00	s	CERAMIC, CHIP 470PF 5% 50V
C419	1-126-394-11	s	ELECT, CHIP 10uF 20% 16V

(AD-76P BOARD used for DFS-500P)

Ref. No. or Q'ty	Part No.	SP	Description
C421	1-126-392-11	s	ELECT, CHIP 100uF 20% 6.3V
C432	1-163-224-11	s	CERAMIC 7PF 0.25PF 50V
C441	1-126-394-11	s	ELECT, CHIP 10uF 20% 16V
C442	1-126-394-11	s	ELECT, CHIP 10uF 20% 16V
C443	1-126-394-11	s	ELECT, CHIP 10uF 20% 16V
C444	1-126-394-11	s	ELECT, CHIP 10uF 20% 16V
C447	1-126-396-11	s	ELECT, CHIP 47uF 20% 16V
C451	1-163-227-11	s	CERAMIC, CHIP 10PF 5% 50V
C452	1-163-251-11	s	CERAMIC, CHIP 100PF 5% 50V
C453	1-163-251-11	s	CERAMIC, CHIP 100PF 5% 50V
C455	1-126-392-11	s	ELECT, CHIP 100uF 20% 6.3V
C459	1-164-232-11	s	CERAMIC 0.01uF 10% 100V
C461	1-126-394-11	s	ELECT, CHIP 10uF 20% 16V
C463	1-163-035-00	s	CERAMIC, CHIP 0.047uF 50V
C466	1-162-638-11	s	CERAMIC, CHIP 1uF 16V
C467	1-126-392-11	s	ELECT, CHIP 100uF 20% 6.3V
C470	1-164-232-11	s	CERAMIC 0.01uF 10% 100V
C471	1-164-232-11	s	CERAMIC 0.01uF 10% 100V
C482	1-163-251-11	s	CERAMIC, CHIP 100PF 5% 50V
C483	1-163-251-11	s	CERAMIC, CHIP 100PF 5% 50V
C485	1-163-239-11	s	CERAMIC, CHIP 33PF 5% 50V
C486	1-163-239-11	s	CERAMIC, CHIP 33PF 5% 50V
C487	1-163-239-11	s	CERAMIC, CHIP 33PF 5% 50V
C488	1-163-121-00	s	CERAMIC, CHIP 150PF 5% 50V
C501	1-126-394-11	s	ELECT, CHIP 10uF 20% 16V
C502	1-126-394-11	s	ELECT, CHIP 10uF 20% 16V
C507	1-162-638-11	s	CERAMIC, CHIP 1uF 16V
C508	1-162-638-11	s	CERAMIC, CHIP 1uF 16V
C510	1-126-396-11	s	ELECT, CHIP 47uF 20% 16V
C521	1-126-392-11	s	ELECT, CHIP 100uF 20% 6.3V
C523	1-163-251-11	s	CERAMIC, CHIP 100PF 5% 50V
C524	1-163-275-11	s	CERAMIC, CHIP 0.001uF 5% 50V
C525	1-162-638-11	s	CERAMIC, CHIP 1uF 16V
C526	1-164-005-11	s	CERAMIC, CHIP 0.47uF 25V
C527	1-162-638-11	s	CERAMIC, CHIP 1uF 16V
C528	1-163-035-00	s	CERAMIC, CHIP 0.047uF 50V
C529	1-163-035-00	s	CERAMIC, CHIP 0.047uF 50V
C530	1-162-638-11	s	CERAMIC, CHIP 1uF 16V
C531	1-126-392-11	s	ELECT, CHIP 100uF 20% 6.3V
C534	1-126-396-11	s	ELECT, CHIP 47uF 20% 16V
C536	1-163-251-11	s	CERAMIC, CHIP 100PF 5% 50V
C537	1-163-275-11	s	CERAMIC, CHIP 0.001uF 5% 50V
C539	1-163-235-11	s	CERAMIC, CHIP 22PF 5% 50V
C540	1-163-275-11	s	CERAMIC, CHIP 0.001uF 5% 50V
C541	1-164-232-11	s	CERAMIC 0.01uF 10% 100V
C542	1-126-398-11	s	ELECT, CHIP 4.7uF 20% 35V
C543	1-163-089-00	s	CERAMIC, CHIP 6PF 50V
C544	1-163-275-11	s	CERAMIC, CHIP 0.001uF 5% 50V
C545	1-163-275-11	s	CERAMIC, CHIP 0.001uF 5% 50V
C546	1-163-275-11	s	CERAMIC, CHIP 0.001uF 5% 50V
C547	1-163-227-11	s	CERAMIC, CHIP 10PF 5% 50V
C548	1-126-394-11	s	ELECT, CHIP 10uF 20% 16V
C560	1-126-392-11	s	ELECT, CHIP 100uF 20% 6.3V
C563	1-126-398-11	s	ELECT, CHIP 4.7uF 20% 35V
C565	1-164-232-11	s	CERAMIC 0.01uF 10% 100V
C566	1-126-392-11	s	ELECT, CHIP 100uF 20% 6.3V
C571	1-163-227-11	s	CERAMIC, CHIP 10PF 5% 50V
C572	1-163-235-11	s	CERAMIC, CHIP 22PF 5% 50V
C575	1-163-227-11	s	CERAMIC, CHIP 10PF 5% 50V

NOTE: Please see page 8-9 for the parts that are not listed in the parts list.

(AD-76P BOARD used for DFS-500P)

Ref. No. or Q'ty	Part No.	SP	Description
C576	1-163-235-11	s	CERAMIC, CHIP 22PF 5% 50V
C585	1-163-239-11	s	CERAMIC, CHIP 33PF 5% 50V
C586	1-163-239-11	s	CERAMIC, CHIP 33PF 5% 50V
C587	1-163-239-11	s	CERAMIC, CHIP 33PF 5% 50V
C588	1-163-239-11	s	CERAMIC, CHIP 33PF 5% 50V
C589	1-163-239-11	s	CERAMIC, CHIP 33PF 5% 50V
C590	1-163-121-00	s	CERAMIC, CHIP 150PF 5% 50V
C592	1-163-251-11	s	CERAMIC, CHIP 100PF 5% 50V
C593	1-126-394-11	s	ELECT, CHIP 10uF 20% 16V
C594	1-163-235-11	s	CERAMIC, CHIP 22PF 5% 50V
C595	1-126-392-11	s	ELECT, CHIP 100uF 20% 6.3V
C601	1-126-394-11	s	ELECT, CHIP 10uF 20% 16V
C602	1-126-394-11	s	ELECT, CHIP 10uF 20% 16V
C607	1-162-638-11	s	CERAMIC, CHIP 1uF 16V
C608	1-162-638-11	s	CERAMIC, CHIP 1uF 16V
C610	1-126-396-11	s	ELECT, CHIP 47uF 20% 16V
C621	1-126-392-11	s	ELECT, CHIP 100uF 20% 6.3V
C623	1-163-251-11	s	CERAMIC, CHIP 100PF 5% 50V
C624	1-163-275-11	s	CERAMIC, CHIP 0.001uF 5% 50V
C625	1-162-638-11	s	CERAMIC, CHIP 1uF 16V
C626	1-164-005-11	s	CERAMIC, CHIP 0.47uF 25V
C627	1-162-638-11	s	CERAMIC, CHIP 1uF 16V
C628	1-163-035-00	s	CERAMIC, CHIP 0.047uF 50V
C629	1-163-035-00	s	CERAMIC, CHIP 0.047uF 50V
C630	1-162-638-11	s	CERAMIC, CHIP 1uF 16V
C631	1-126-392-11	s	ELECT, CHIP 100uF 20% 6.3V
C634	1-126-396-11	s	ELECT, CHIP 47uF 20% 16V
C636	1-163-251-11	s	CERAMIC, CHIP 100PF 5% 50V
C637	1-163-275-11	s	CERAMIC, CHIP 0.001uF 5% 50V
C639	1-163-235-11	s	CERAMIC, CHIP 22PF 5% 50V
C640	1-163-275-11	s	CERAMIC, CHIP 0.001uF 5% 50V
C641	1-164-232-11	s	CERAMIC 0.01uF 10% 100V
C642	1-126-398-11	s	ELECT, CHIP 4.7uF 20% 35V
C643	1-163-089-00	s	CERAMIC, CHIP 6PF 50V
C644	1-163-275-11	s	CERAMIC, CHIP 0.001uF 5% 50V
C645	1-163-275-11	s	CERAMIC, CHIP 0.001uF 5% 50V
C646	1-163-275-11	s	CERAMIC, CHIP 0.001uF 5% 50V
C647	1-163-227-11	s	CERAMIC, CHIP 10PF 5% 50V
C648	1-126-394-11	s	ELECT, CHIP 10uF 20% 16V
C660	1-126-392-11	s	ELECT, CHIP 100uF 20% 6.3V
C663	1-126-398-11	s	ELECT, CHIP 4.7uF 20% 35V
C665	1-164-232-11	s	CERAMIC 0.01uF 10% 100V
C666	1-126-392-11	s	ELECT, CHIP 100uF 20% 6.3V
C671	1-163-227-11	s	CERAMIC, CHIP 10PF 5% 50V
C672	1-163-235-11	s	CERAMIC, CHIP 22PF 5% 50V
C675	1-163-227-11	s	CERAMIC, CHIP 10PF 5% 50V
C676	1-163-235-11	s	CERAMIC, CHIP 22PF 5% 50V
C685	1-163-239-11	s	CERAMIC, CHIP 33PF 5% 50V
C686	1-163-239-11	s	CERAMIC, CHIP 33PF 5% 50V
C687	1-163-239-11	s	CERAMIC, CHIP 33PF 5% 50V
C688	1-163-239-11	s	CERAMIC, CHIP 33PF 5% 50V
C689	1-163-239-11	s	CERAMIC, CHIP 33PF 5% 50V
C690	1-163-121-00	s	CERAMIC, CHIP 150PF 5% 50V
C692	1-163-251-11	s	CERAMIC, CHIP 100PF 5% 50V
C693	1-126-394-11	s	ELECT, CHIP 10uF 20% 16V
C694	1-163-235-11	s	CERAMIC, CHIP 22PF 5% 50V
C695	1-126-392-11	s	ELECT, CHIP 100uF 20% 6.3V
C701	1-162-638-11	s	CERAMIC, CHIP 1uF 16V
C702	1-126-396-11	s	ELECT, CHIP 47uF 20% 16V

(AD-76P BOARD used for DFS-500P)

Ref. No. or Q'ty	Part No.	SP	Description
C703	1-126-396-11	s	ELECT, CHIP 47uF 20% 16V
C704	1-163-087-00	s	CERAMIC, CHIP 4PF 50V
C720	1-163-235-11	s	CERAMIC, CHIP 22PF 5% 50V
C740	1-163-235-11	s	CERAMIC, CHIP 22PF 5% 50V
C751	1-104-601-21	s	ELECT 10uF 20% 10V
C752	1-104-601-21	s	ELECT 10uF 20% 10V
C753	1-126-396-11	s	ELECT, CHIP 47uF 20% 16V
C756	1-126-394-11	s	ELECT, CHIP 10uF 20% 16V
C757	1-126-396-11	s	ELECT, CHIP 47uF 20% 16V
C759	1-126-392-11	s	ELECT, CHIP 100uF 20% 6.3V
C760	1-162-638-11	s	CERAMIC, CHIP 1uF 16V
C763	1-126-392-11	s	ELECT, CHIP 100uF 20% 6.3V
C764	1-162-638-11	s	CERAMIC, CHIP 1uF 16V
C765	1-162-638-11	s	CERAMIC, CHIP 1uF 16V
C766	1-104-601-21	s	ELECT 10uF 20% 10V
C767	1-104-601-21	s	ELECT 10uF 20% 10V
C770	1-126-394-11	s	ELECT, CHIP 10uF 20% 16V
C771	1-126-396-11	s	ELECT, CHIP 47uF 20% 16V
C773	1-126-392-11	s	ELECT, CHIP 100uF 20% 6.3V
C774	1-162-638-11	s	CERAMIC, CHIP 1uF 16V
C777	1-126-392-11	s	ELECT, CHIP 100uF 20% 6.3V
C778	1-162-638-11	s	CERAMIC, CHIP 1uF 16V
C779	1-162-638-11	s	CERAMIC, CHIP 1uF 16V
C786	1-104-601-21	s	ELECT 10uF 20% 10V
C787	1-104-601-21	s	ELECT 10uF 20% 10V
C790	1-126-394-11	s	ELECT, CHIP 10uF 20% 16V
C791	1-126-396-11	s	ELECT, CHIP 47uF 20% 16V
C793	1-126-392-11	s	ELECT, CHIP 100uF 20% 6.3V
C794	1-162-638-11	s	CERAMIC, CHIP 1uF 16V
C797	1-126-392-11	s	ELECT, CHIP 100uF 20% 6.3V
C798	1-162-638-11	s	CERAMIC, CHIP 1uF 16V
C799	1-162-638-11	s	CERAMIC, CHIP 1uF 16V
C801	1-162-638-11	s	CERAMIC, CHIP 1uF 16V
C802	1-126-396-11	s	ELECT, CHIP 47uF 20% 16V
C803	1-126-396-11	s	ELECT, CHIP 47uF 20% 16V
C804	1-163-087-00	s	CERAMIC, CHIP 4PF 50V
C820	1-163-235-11	s	CERAMIC, CHIP 22PF 5% 50V
C840	1-163-235-11	s	CERAMIC, CHIP 22PF 5% 50V
C851	1-104-601-21	s	ELECT 10uF 20% 10V
C852	1-104-601-21	s	ELECT 10uF 20% 10V
C853	1-126-396-11	s	ELECT, CHIP 47uF 20% 16V
C856	1-126-394-11	s	ELECT, CHIP 10uF 20% 16V
C857	1-126-396-11	s	ELECT, CHIP 47uF 20% 16V
C859	1-126-392-11	s	ELECT, CHIP 100uF 20% 6.3V
C860	1-162-638-11	s	CERAMIC, CHIP 1uF 16V
C863	1-126-392-11	s	ELECT, CHIP 100uF 20% 6.3V
C864	1-162-638-11	s	CERAMIC, CHIP 1uF 16V
C865	1-162-638-11	s	CERAMIC, CHIP 1uF 16V
C866	1-104-601-21	s	ELECT 10uF 20% 10V
C867	1-104-601-21	s	ELECT 10uF 20% 10V
C870	1-126-394-11	s	ELECT, CHIP 10uF 20% 16V
C871	1-126-396-11	s	ELECT, CHIP 47uF 20% 16V
C873	1-126-392-11	s	ELECT, CHIP 100uF 20% 6.3V
C874	1-162-638-11	s	CERAMIC, CHIP 1uF 16V
C877	1-126-392-11	s	ELECT, CHIP 100uF 20% 6.3V
C878	1-162-638-11	s	CERAMIC, CHIP 1uF 16V
C879	1-162-638-11	s	CERAMIC, CHIP 1uF 16V
C886	1-104-601-21	s	ELECT 10uF 20% 10V
C887	1-104-601-21	s	ELECT 10uF 20% 10V

NOTE: Please see page 8-9 for the parts that are not listed in the parts list.

(AD-76P BOARD used for DFS-500P)

Ref. No. or Q'ty	Part No.	SP	Description
C890	1-126-394-11	s	ELECT, CHIP 10uF 20% 16V
C891	1-126-396-11	s	ELECT, CHIP 47uF 20% 16V
C893	1-126-392-11	s	ELECT, CHIP 100uF 20% 6.3V
C894	1-162-638-11	s	CERAMIC, CHIP 1uF 16V
C897	1-126-392-11	s	ELECT, CHIP 100uF 20% 6.3V
C898	1-162-638-11	s	CERAMIC, CHIP 1uF 16V
C899	1-162-638-11	s	CERAMIC, CHIP 1uF 16V
C901	1-162-638-11	s	CERAMIC, CHIP 1uF 16V
C902	1-126-394-11	s	ELECT, CHIP 10uF 20% 16V
C908	1-163-251-11	s	CERAMIC, CHIP 100PF 5% 50V
C909	1-163-251-11	s	CERAMIC, CHIP 100PF 5% 50V
C911	1-126-392-11	s	ELECT, CHIP 100uF 20% 6.3V
C915	1-163-251-11	s	CERAMIC, CHIP 100PF 5% 50V
C916	1-163-275-11	s	CERAMIC, CHIP 0.001uF 5% 50V
C918	1-163-251-11	s	CERAMIC, CHIP 100PF 5% 50V
C919	1-163-251-11	s	CERAMIC, CHIP 100PF 5% 50V
C922	1-164-004-11	s	CERAMIC, CHIP 0.1uF 10% 25V
C923	1-126-392-11	s	ELECT, CHIP 100uF 20% 6.3V
C927	1-163-275-11	s	CERAMIC, CHIP 0.001uF 5% 50V
C930	1-163-227-11	s	CERAMIC, CHIP 10PF 5% 50V
C939	1-163-235-11	s	CERAMIC, CHIP 22PF 5% 50V
C944	1-164-004-11	s	CERAMIC, CHIP 0.1uF 10% 25V
C945	1-164-004-11	s	CERAMIC, CHIP 0.1uF 10% 25V
C946	1-163-251-11	s	CERAMIC, CHIP 100PF 5% 50V
C952	1-126-396-11	s	ELECT, CHIP 47uF 20% 16V
C953	1-163-137-00	s	CERAMIC, CHIP 680PF 5% 50V
C954	1-164-232-11	s	CERAMIC 0.01uF 10% 100V
C955	1-126-396-11	s	ELECT, CHIP 47uF 20% 16V
C956	1-126-394-11	s	ELECT, CHIP 10uF 20% 16V
C957	1-164-005-11	s	CERAMIC, CHIP 0.47uF 25V
C958	1-164-232-11	s	CERAMIC 0.01uF 10% 100V
C961	1-163-133-00	s	CERAMIC, CHIP 470PF 5% 50V
C962	1-163-224-11	s	CERAMIC 7PF 0.25PF 50V
C963	1-164-232-11	s	CERAMIC 0.01uF 10% 100V
C965	1-163-275-11	s	CERAMIC, CHIP 0.001uF 5% 50V
C968	1-163-239-11	s	CERAMIC, CHIP 33PF 5% 50V
C1001	1-162-638-11	s	CERAMIC, CHIP 1uF 16V
C1002	1-126-394-11	s	ELECT, CHIP 10uF 20% 16V
C1008	1-163-251-11	s	CERAMIC, CHIP 100PF 5% 50V
C1009	1-163-251-11	s	CERAMIC, CHIP 100PF 5% 50V
C1011	1-126-392-11	s	ELECT, CHIP 100uF 20% 6.3V
C1015	1-163-251-11	s	CERAMIC, CHIP 100PF 5% 50V
C1016	1-163-275-11	s	CERAMIC, CHIP 0.001uF 5% 50V
C1018	1-163-251-11	s	CERAMIC, CHIP 100PF 5% 50V
C1019	1-163-251-11	s	CERAMIC, CHIP 100PF 5% 50V
C1022	1-164-004-11	s	CERAMIC, CHIP 0.1uF 10% 25V
C1023	1-126-392-11	s	ELECT, CHIP 100uF 20% 6.3V
C1027	1-163-275-11	s	CERAMIC, CHIP 0.001uF 5% 50V
C1030	1-163-227-11	s	CERAMIC, CHIP 10PF 5% 50V
C1039	1-163-235-11	s	CERAMIC, CHIP 22PF 5% 50V
C1044	1-164-004-11	s	CERAMIC, CHIP 0.1uF 10% 25V
C1045	1-164-004-11	s	CERAMIC, CHIP 0.1uF 10% 25V
C1046	1-163-275-11	s	CERAMIC, CHIP 0.001uF 5% 50V
C1052	1-126-396-11	s	ELECT, CHIP 47uF 20% 16V
C1053	1-163-137-00	s	CERAMIC, CHIP 680PF 5% 50V
C1054	1-164-232-11	s	CERAMIC 0.01uF 10% 100V
C1055	1-126-396-11	s	ELECT, CHIP 47uF 20% 16V
C1056	1-126-394-11	s	ELECT, CHIP 10uF 20% 16V
C1057	1-164-005-11	s	CERAMIC, CHIP 0.47uF 25V

NOTE: Please see page 8-9 for the parts that are not listed in the parts list.

(AD-76P BOARD used for DFS-500P)

Ref. No. or Q'ty	Part No.	SP	Description
C1058	1-164-232-11	s	CERAMIC 0.01uF 10% 100V
C1061	1-163-133-00	s	CERAMIC, CHIP 470PF 5% 50V
C1062	1-163-224-11	s	CERAMIC 7PF 0.25PF 50V
C1063	1-164-232-11	s	CERAMIC 0.01uF 10% 100V
C1065	1-163-275-11	s	CERAMIC, CHIP 0.001uF 5% 50V
C1068	1-163-239-11	s	CERAMIC, CHIP 33PF 5% 50V
CN19	1-506-748-11	o	CONNECTOR, DIN 96P, MALE
CN20	1-506-748-11	o	CONNECTOR, DIN 96P, MALE
CN21	1-506-748-11	o	CONNECTOR, DIN 96P, MALE
CV101	1-141-229-00	s	CAP, TRIMMER 7PF
CV201	1-141-229-00	s	CAP, TRIMMER 7PF
D101	8-719-104-34	s	DIODE 1S2835
D102	8-719-104-34	s	DIODE 1S2835
D103	8-719-104-34	s	DIODE 1S2835
D106	8-719-104-34	s	DIODE 1S2835
D107	8-719-104-34	s	DIODE 1S2835
D111	8-719-104-34	s	DIODE 1S2835
D112	8-719-104-34	s	DIODE 1S2835
D113	8-719-104-34	s	DIODE 1S2835
D121	8-719-104-34	s	DIODE 1S2835
D122	8-719-104-34	s	DIODE 1S2835
D123	8-719-105-57	s	DIODE RD3.9M-B1
D124	8-719-157-23	s	DIODE RD4.7M-B
D125	8-719-915-43	s	DIODE, VARICAP FC54M
D126	8-719-915-43	s	DIODE, VARICAP FC54M
D201	8-719-104-34	s	DIODE 1S2835
D202	8-719-104-34	s	DIODE 1S2835
D203	8-719-104-34	s	DIODE 1S2835
D206	8-719-104-34	s	DIODE 1S2835
D207	8-719-104-34	s	DIODE 1S2835
D211	8-719-104-34	s	DIODE 1S2835
D212	8-719-104-34	s	DIODE 1S2835
D213	8-719-104-34	s	DIODE 1S2835
D221	8-719-104-34	s	DIODE 1S2835
D222	8-719-104-34	s	DIODE 1S2835
D223	8-719-105-57	s	DIODE RD3.9M-B1
D224	8-719-157-23	s	DIODE RD4.7M-B
D225	8-719-915-43	s	DIODE, VARICAP FC54M
D226	8-719-915-43	s	DIODE, VARICAP FC54M
D301	8-719-104-34	s	DIODE 1S2835
DL101	1-415-348-21	s	DELAY LINE 280NS
DL102	1-415-309-00	s	DELAY LINE 350nS
DL103	1-415-348-21	s	DELAY LINE 280NS
DL201	1-415-348-21	s	DELAY LINE 280NS
DL202	1-415-309-00	s	DELAY LINE 350nS
DL203	1-415-348-21	s	DELAY LINE 280NS
FL101	1-239-085-11	s	FILTER, LOW-PASS
FL102	1-239-085-11	s	FILTER, LOW-PASS
FL103	1-239-085-11	s	FILTER, LOW-PASS
FL111	1-235-758-11	s	FILTER, LOW-PASS
FL112	1-235-758-11	s	FILTER, LOW-PASS
FL113	1-239-085-11	s	FILTER, LOW-PASS
FL114	1-235-758-11	s	FILTER, LOW-PASS
FL115	1-235-758-11	s	FILTER, LOW-PASS
FL201	1-239-085-11	s	FILTER, LOW-PASS
FL202	1-239-085-11	s	FILTER, LOW-PASS

(AD-76P BOARD used for DFS-500P)

Ref. No. or Q'ty	Part No.	SP	Description
FL203	1-239-085-11	s	FILTER, LOW-PASS
FL211	1-235-758-11	s	FILTER, LOW-PASS
FL212	1-235-758-11	s	FILTER, LOW-PASS
FL213	1-239-085-11	s	FILTER, LOW-PASS
FL214	1-235-758-11	s	FILTER, LOW-PASS
FL215	1-235-758-11	s	FILTER, LOW-PASS
IC1	8-759-231-53	s	IC TA7805S
IC2	8-759-520-06	s	IC NJM7809FA
IC3	8-759-520-06	s	IC NJM7809FA
IC4	8-759-701-87	s	IC NJM7909FA
IC101	8-759-710-29	s	IC NJM2235M
IC102	8-759-710-62	s	IC NJM2246M
IC103	8-759-710-29	s	IC NJM2235M
IC104	8-759-710-62	s	IC NJM2246M
IC105	8-759-710-07	s	IC NJM2234M
IC106	8-759-711-32	s	IC NJM2245M
IC107	8-759-710-29	s	IC NJM2235M
IC108	8-759-710-62	s	IC NJM2246M
IC109	8-759-710-07	s	IC NJM2234M
IC110	8-759-711-32	s	IC NJM2245M
IC111	8-759-710-07	s	IC NJM2234M
IC112	8-759-711-32	s	IC NJM2245M
IC113	8-759-925-74	s	IC TC74HC04NS
IC114	8-759-926-99	s	IC SN74HC4075NS
IC115	8-759-926-99	s	IC SN74HC4075NS
IC116	8-759-925-85	s	IC SN74HC32NS
IC117	8-759-925-82	s	IC SN74HC21NS
IC118	8-759-925-85	s	IC SN74HC32NS
IC119	8-759-925-85	s	IC SN74HC32NS
IC120	8-759-925-82	s	IC SN74HC21NS
IC121	8-759-925-74	s	IC TC74HC04NS
IC122	8-752-334-55	s	IC CXD1175M
IC123	8-752-342-61	s	IC CXD2105AQ
IC124	8-759-710-29	s	IC NJM2235M
IC125	8-759-710-07	s	IC NJM2234M
IC126	8-759-987-27	s	IC LM1881M
IC127	8-759-111-69	s	IC UPC1037HA
IC128	8-759-234-77	s	IC TC4S66F
IC129	8-759-983-69	s	IC LM358PS
IC130	8-759-925-90	s	IC SN74HC74NS
IC131	8-759-239-58	s	IC TC74HC221AF
IC132	8-759-926-07	s	IC SN74HC132NS
IC133	8-759-710-29	s	IC NJM2235M
IC134	8-759-980-04	s	IC LM311PS
IC135	8-759-239-58	s	IC TC74HC221AF
IC136	8-759-038-46	s	IC TC7S00F-TE85L
IC137	8-759-603-54	s	IC M51271FP
IC138	8-759-710-86	s	IC NJM2233BM-T1
IC139	8-759-710-86	s	IC NJM2233BM-T1
IC140	8-759-926-07	s	IC SN74HC132NS
IC141	8-759-980-04	s	IC LM311PS
IC142	8-759-710-62	s	IC NJM2246M
IC143	8-759-711-32	s	IC NJM2245M
IC144	8-759-711-32	s	IC NJM2245M
IC145	8-752-334-55	s	IC CXD1175M
IC146	8-752-334-55	s	IC CXD1175M
IC147	8-752-334-55	s	IC CXD1175M
IC148	8-759-926-82	s	IC SN74HC574ANS

(AD-76P BOARD used for DFS-500P)

Ref. No. or Q'ty	Part No.	SP	Description
IC149	8-759-926-82	s	IC SN74HC574ANS
IC150	8-759-926-82	s	IC SN74HC574ANS
IC151	8-759-710-29	s	IC NJM2235M
IC152	8-759-980-04	s	IC LM311PS
IC153	8-759-987-27	s	IC LM1881M
IC154	8-759-239-58	s	IC TC74HC221AF
IC155	8-759-239-58	s	IC TC74HC221AF
IC156	8-759-927-46	s	IC SN74HC00NS
IC157	8-759-239-58	s	IC TC74HC221AF
IC158	8-759-926-24	s	IC SN74HC164NS
IC159	8-759-925-90	s	IC SN74HC74NS
IC160	8-759-925-90	s	IC SN74HC74NS
IC161	8-759-927-46	s	IC SN74HC00NS
IC162	8-759-927-46	s	IC SN74HC00NS
IC163	8-759-925-90	s	IC SN74HC74NS
IC164	8-759-926-23	s	IC SN74HC163NS
IC165	8-759-926-23	s	IC SN74HC163NS
IC166	8-759-926-23	s	IC SN74HC163NS
IC167	8-759-925-74	s	IC TC74HC04NS
IC168	8-759-925-81	s	IC SN74HC20ANS
IC169	8-759-927-46	s	IC SN74HC00NS
IC170	8-759-925-78	s	IC SN74HC10NS
IC171	8-759-239-58	s	IC TC74HC221AF
IC172	8-759-926-29	s	IC SN74HC175NS
IC173	8-759-926-24	s	IC SN74HC164NS
IC174	8-759-927-46	s	IC SN74HC00NS
IC175	8-759-239-58	s	IC TC74HC221AF
IC176	8-749-901-21	s	IC BX1461
IC177	8-759-908-17	s	IC TL082CPS
IC178	8-759-926-48	s	IC SN74HC244NS
IC179	8-759-926-03	s	IC SN74HC113NS
IC201	8-759-710-29	s	IC NJM2235M
IC202	8-759-710-62	s	IC NJM2246M
IC203	8-759-710-29	s	IC NJM2235M
IC204	8-759-710-62	s	IC NJM2246M
IC205	8-759-710-07	s	IC NJM2234M
IC206	8-759-711-32	s	IC NJM2245M
IC207	8-759-710-29	s	IC NJM2235M
IC208	8-759-710-62	s	IC NJM2246M
IC209	8-759-710-07	s	IC NJM2234M
IC210	8-759-711-32	s	IC NJM2245M
IC211	8-759-710-07	s	IC NJM2234M
IC212	8-759-711-32	s	IC NJM2245M
IC213	8-759-925-74	s	IC TC74HC04NS
IC214	8-759-926-99	s	IC SN74HC4075NS
IC215	8-759-926-99	s	IC SN74HC4075NS
IC216	8-759-925-85	s	IC SN74HC32NS
IC217	8-759-925-82	s	IC SN74HC21NS
IC218	8-759-925-85	s	IC SN74HC32NS
IC219	8-759-925-85	s	IC SN74HC32NS
IC220	8-759-925-82	s	IC SN74HC21NS
IC222	8-752-334-55	s	IC CXD1175M
IC223	8-752-342-61	s	IC CXD2105AQ
IC224	8-759-710-29	s	IC NJM2235M
IC225	8-759-710-07	s	IC NJM2234M
IC226	8-759-987-27	s	IC LM1881M
IC227	8-759-111-69	s	IC UPC1037HA
IC228	8-759-234-77	s	IC TC4S66F
IC229	8-759-983-69	s	IC LM358PS

NOTE: Please see page 8-9 for the parts that are not listed in the parts list.

(AD-76P BOARD used for DFS-500P)

Ref. No. or Q'ty	Part No.	SP	Description
IC230	8-759-925-90	s	IC SN74HC74NS
IC231	8-759-239-58	s	IC TC74HC221AF
IC232	8-759-926-07	s	IC SN74HC132NS
IC233	8-759-710-29	s	IC NJM2235M
IC234	8-759-980-04	s	IC LM311PS
IC235	8-759-239-58	s	IC TC74HC221AF
IC236	8-759-038-46	s	IC TC7S00F-TE85L
IC237	8-759-603-54	s	IC M51271FP
IC238	8-759-710-86	s	IC NJM2233BM-T1
IC239	8-759-710-86	s	IC NJM2233BM-T1
IC240	8-759-926-07	s	IC SN74HC132NS
IC241	8-759-980-04	s	IC LM311PS
IC242	8-759-710-62	s	IC NJM2246M
IC243	8-759-711-32	s	IC NJM2245M
IC244	8-759-711-32	s	IC NJM2245M
IC245	8-752-334-55	s	IC CXD1175M
IC246	8-752-334-55	s	IC CXD1175M
IC247	8-752-334-55	s	IC CXD1175M
IC248	8-759-926-82	s	IC SN74HC574ANS
IC249	8-759-926-82	s	IC SN74HC574ANS
IC250	8-759-926-82	s	IC SN74HC574ANS
IC251	8-759-710-29	s	IC NJM2235M
IC252	8-759-980-04	s	IC LM311PS
IC253	8-759-987-27	s	IC LM1881M
IC254	8-759-239-58	s	IC TC74HC221AF
IC255	8-759-239-58	s	IC TC74HC221AF
IC256	8-759-927-46	s	IC SN74HC00NS
IC257	8-759-239-58	s	IC TC74HC221AF
IC258	8-759-926-24	s	IC SN74HC164NS
IC259	8-759-925-90	s	IC SN74HC74NS
IC260	8-759-925-90	s	IC SN74HC74NS
IC261	8-759-927-46	s	IC SN74HC00NS
IC262	8-759-927-46	s	IC SN74HC00NS
IC263	8-759-925-90	s	IC SN74HC74NS
IC264	8-759-926-23	s	IC SN74HC163NS
IC265	8-759-926-23	s	IC SN74HC163NS
IC266	8-759-926-23	s	IC SN74HC163NS
IC267	8-759-925-74	s	IC TC74HC04NS
IC268	8-759-925-81	s	IC SN74HC20ANS
IC269	8-759-927-46	s	IC SN74HC00NS
IC270	8-759-925-78	s	IC SN74HC10NS
IC271	8-759-239-58	s	IC TC74HC221AF
IC272	8-759-926-29	s	IC SN74HC175NS
IC273	8-759-926-24	s	IC SN74HC164NS
IC274	8-759-927-46	s	IC SN74HC00NS
IC275	8-759-239-58	s	IC TC74HC221AF
IC276	8-749-901-21	s	IC BX1461
IC277	8-759-908-17	s	IC TL082CPS
IC278	8-759-926-48	s	IC SN74HC244NS
IC279	8-759-926-03	s	IC SN74HC113NS
IC301	8-759-702-08	s	IC NJM360M
IC302	8-759-925-73	s	IC SN74HC03NS
L1	1-412-525-31	s	INDUCTOR 10uH
L2	1-412-525-31	s	INDUCTOR 10uH
L3	1-412-525-31	s	INDUCTOR 10uH
L101	1-408-789-21	s	INDUCTOR CHIP 100UH
L102	1-408-785-21	s	INDUCTOR CHIP 47UH
L103	1-408-785-21	s	INDUCTOR CHIP 47UH

(AD-76P BOARD used for DFS-500P)

Ref. No. or Q'ty	Part No.	SP	Description
L104	1-408-789-21	s	INDUCTOR CHIP 100UH
L105	1-408-793-21	s	INDUCTOR CHIP 220UH
L111	1-408-797-11	s	INDUCTOR CHIP 470UH
L112	1-408-785-21	s	INDUCTOR CHIP 47UH
L113	1-408-782-11	s	INDUCTOR CHIP 27UH
L114	1-408-785-21	s	INDUCTOR CHIP 47UH
L115	1-408-782-11	s	INDUCTOR CHIP 27UH
L116	1-408-785-21	s	INDUCTOR CHIP 47UH
L117	1-408-785-21	s	INDUCTOR CHIP 47UH
L118	1-408-785-21	s	INDUCTOR CHIP 47UH
L121	1-408-785-21	s	INDUCTOR CHIP 47UH
L122	1-408-785-21	s	INDUCTOR CHIP 47UH
L123	1-408-785-21	s	INDUCTOR CHIP 47UH
L124	1-408-785-21	s	INDUCTOR CHIP 47UH
L125	1-408-785-21	s	INDUCTOR CHIP 47UH
L126	1-408-785-21	s	INDUCTOR CHIP 47UH
L131	1-408-793-21	s	INDUCTOR CHIP 220UH
L132	1-408-765-21	s	INDUCTOR, CHIP 1uH
L201	1-408-789-21	s	INDUCTOR CHIP 100UH
L202	1-408-785-21	s	INDUCTOR CHIP 47UH
L203	1-408-785-21	s	INDUCTOR CHIP 47UH
L204	1-408-789-21	s	INDUCTOR CHIP 100UH
L205	1-408-793-21	s	INDUCTOR CHIP 220UH
L211	1-408-797-11	s	INDUCTOR CHIP 470UH
L212	1-408-785-21	s	INDUCTOR CHIP 47UH
L213	1-408-782-11	s	INDUCTOR CHIP 27UH
L214	1-408-785-21	s	INDUCTOR CHIP 47UH
L215	1-408-782-11	s	INDUCTOR CHIP 27UH
L216	1-408-785-21	s	INDUCTOR CHIP 47UH
L217	1-408-785-21	s	INDUCTOR CHIP 47UH
L218	1-408-785-21	s	INDUCTOR CHIP 47UH
L221	1-408-785-21	s	INDUCTOR CHIP 47UH
L222	1-408-785-21	s	INDUCTOR CHIP 47UH
L223	1-408-785-21	s	INDUCTOR CHIP 47UH
L224	1-408-785-21	s	INDUCTOR CHIP 47UH
L225	1-408-785-21	s	INDUCTOR CHIP 47UH
L226	1-408-785-21	s	INDUCTOR CHIP 47UH
L231	1-408-793-21	s	INDUCTOR CHIP 220UH
L232	1-408-765-21	s	INDUCTOR, CHIP 1uH
L301	1-408-789-21	s	INDUCTOR CHIP 100UH
LV101	1-410-286-11	s	INDUCTOR, VAR 1uH
LV201	1-410-286-11	s	INDUCTOR, VAR 1uH
PS1	⚠1-532-637-00	s	LINK, IC 1.0A
PS2	⚠1-532-605-00	s	LINK, IC 0.4A
PS3	⚠1-532-637-00	s	LINK, IC 1.0A
Q101	8-729-120-28	s	TRANSISTOR 2SC1623-L5L6
Q102	8-729-120-28	s	TRANSISTOR 2SC1623-L5L6
Q103	8-729-120-28	s	TRANSISTOR 2SC1623-L5L6
Q104	8-729-116-64	s	TRANSISTOR 2SK508-K51
Q105	8-729-216-22	s	TRANSISTOR 2SA1162
Q106	8-729-120-28	s	TRANSISTOR 2SC1623-L5L6
Q107	8-729-120-28	s	TRANSISTOR 2SC1623-L5L6
Q108	8-729-120-28	s	TRANSISTOR 2SC1623-L5L6
Q111	8-729-120-28	s	TRANSISTOR 2SC1623-L5L6
Q112	8-729-120-28	s	TRANSISTOR 2SC1623-L5L6
Q113	8-729-120-28	s	TRANSISTOR 2SC1623-L5L6
Q114	8-729-120-28	s	TRANSISTOR 2SC1623-L5L6
Q115	8-729-216-22	s	TRANSISTOR 2SA1162

NOTE: Please see page 8-9 for the parts that are not listed in the parts list.

(AD-76P BOARD used for DFS-500P)

Ref. No. or Q'ty	Part No.	SP	Description
Q121	8-729-120-28	s	TRANSISTOR 2SC1623-L5L6
Q122	8-729-120-28	s	TRANSISTOR 2SC1623-L5L6
Q123	8-729-120-28	s	TRANSISTOR 2SC1623-L5L6
Q124	8-729-120-28	s	TRANSISTOR 2SC1623-L5L6
Q125	8-729-120-28	s	TRANSISTOR 2SC1623-L5L6
Q131	8-729-216-22	s	TRANSISTOR 2SA1162
Q132	8-729-216-22	s	TRANSISTOR 2SA1162
Q133	8-729-120-28	s	TRANSISTOR 2SC1623-L5L6
Q134	8-729-120-28	s	TRANSISTOR 2SC1623-L5L6
Q135	8-729-120-28	s	TRANSISTOR 2SC1623-L5L6
Q136	8-729-216-22	s	TRANSISTOR 2SA1162
Q137	8-729-216-22	s	TRANSISTOR 2SA1162
Q138	8-729-120-28	s	TRANSISTOR 2SC1623-L5L6
Q139	8-729-120-28	s	TRANSISTOR 2SC1623-L5L6
Q140	8-729-120-28	s	TRANSISTOR 2SC1623-L5L6
Q141	8-729-120-28	s	TRANSISTOR 2SC1623-L5L6
Q151	8-729-120-28	s	TRANSISTOR 2SC1623-L5L6
Q152	8-729-120-28	s	TRANSISTOR 2SC1623-L5L6
Q153	8-729-120-28	s	TRANSISTOR 2SC1623-L5L6
Q154	8-729-120-28	s	TRANSISTOR 2SC1623-L5L6
Q155	8-729-120-28	s	TRANSISTOR 2SC1623-L5L6
Q156	8-729-120-28	s	TRANSISTOR 2SC1623-L5L6
Q157	8-729-120-28	s	TRANSISTOR 2SC1623-L5L6
Q158	8-729-120-28	s	TRANSISTOR 2SC1623-L5L6
Q159	8-729-120-28	s	TRANSISTOR 2SC1623-L5L6
Q160	8-729-120-28	s	TRANSISTOR 2SC1623-L5L6
Q171	8-729-116-64	s	TRANSISTOR 2SK508-K51
Q172	8-729-216-22	s	TRANSISTOR 2SA1162
Q173	8-729-120-28	s	TRANSISTOR 2SC1623-L5L6
Q174	8-729-116-64	s	TRANSISTOR 2SK508-K51
Q175	8-729-216-22	s	TRANSISTOR 2SA1162
Q176	8-729-120-28	s	TRANSISTOR 2SC1623-L5L6
Q177	8-729-116-64	s	TRANSISTOR 2SK508-K51
Q178	8-729-216-22	s	TRANSISTOR 2SA1162
Q179	8-729-120-28	s	TRANSISTOR 2SC1623-L5L6
Q180	8-729-216-22	s	TRANSISTOR 2SA1162
Q191	8-729-120-28	s	TRANSISTOR 2SC1623-L5L6
Q192	8-729-120-28	s	TRANSISTOR 2SC1623-L5L6
Q193	8-729-120-28	s	TRANSISTOR 2SC1623-L5L6
Q201	8-729-120-28	s	TRANSISTOR 2SC1623-L5L6
Q202	8-729-120-28	s	TRANSISTOR 2SC1623-L5L6
Q203	8-729-120-28	s	TRANSISTOR 2SC1623-L5L6
Q204	8-729-116-64	s	TRANSISTOR 2SK508-K51
Q205	8-729-216-22	s	TRANSISTOR 2SA1162
Q206	8-729-120-28	s	TRANSISTOR 2SC1623-L5L6
Q207	8-729-120-28	s	TRANSISTOR 2SC1623-L5L6
Q208	8-729-120-28	s	TRANSISTOR 2SC1623-L5L6
Q211	8-729-120-28	s	TRANSISTOR 2SC1623-L5L6
Q212	8-729-120-28	s	TRANSISTOR 2SC1623-L5L6
Q213	8-729-120-28	s	TRANSISTOR 2SC1623-L5L6
Q214	8-729-120-28	s	TRANSISTOR 2SC1623-L5L6
Q215	8-729-216-22	s	TRANSISTOR 2SA1162
Q221	8-729-120-28	s	TRANSISTOR 2SC1623-L5L6
Q222	8-729-120-28	s	TRANSISTOR 2SC1623-L5L6
Q223	8-729-120-28	s	TRANSISTOR 2SC1623-L5L6
Q224	8-729-120-28	s	TRANSISTOR 2SC1623-L5L6
Q225	8-729-120-28	s	TRANSISTOR 2SC1623-L5L6
Q231	8-729-216-22	s	TRANSISTOR 2SA1162
Q232	8-729-216-22	s	TRANSISTOR 2SA1162

(AD-76P BOARD used for DFS-500P)

Ref. No. or Q'ty	Part No.	SP	Description
Q233	8-729-120-28	s	TRANSISTOR 2SC1623-L5L6
Q234	8-729-120-28	s	TRANSISTOR 2SC1623-L5L6
Q235	8-729-120-28	s	TRANSISTOR 2SC1623-L5L6
Q236	8-729-216-22	s	TRANSISTOR 2SA1162
Q237	8-729-216-22	s	TRANSISTOR 2SA1162
Q238	8-729-120-28	s	TRANSISTOR 2SC1623-L5L6
Q239	8-729-120-28	s	TRANSISTOR 2SC1623-L5L6
Q240	8-729-120-28	s	TRANSISTOR 2SC1623-L5L6
Q241	8-729-120-28	s	TRANSISTOR 2SC1623-L5L6
Q251	8-729-120-28	s	TRANSISTOR 2SC1623-L5L6
Q252	8-729-120-28	s	TRANSISTOR 2SC1623-L5L6
Q253	8-729-120-28	s	TRANSISTOR 2SC1623-L5L6
Q254	8-729-120-28	s	TRANSISTOR 2SC1623-L5L6
Q255	8-729-120-28	s	TRANSISTOR 2SC1623-L5L6
Q256	8-729-120-28	s	TRANSISTOR 2SC1623-L5L6
Q257	8-729-120-28	s	TRANSISTOR 2SC1623-L5L6
Q258	8-729-120-28	s	TRANSISTOR 2SC1623-L5L6
Q259	8-729-120-28	s	TRANSISTOR 2SC1623-L5L6
Q260	8-729-120-28	s	TRANSISTOR 2SC1623-L5L6
Q271	8-729-116-64	s	TRANSISTOR 2SK508-K51
Q272	8-729-216-22	s	TRANSISTOR 2SA1162
Q273	8-729-120-28	s	TRANSISTOR 2SC1623-L5L6
Q274	8-729-116-64	s	TRANSISTOR 2SK508-K51
Q275	8-729-216-22	s	TRANSISTOR 2SA1162
Q276	8-729-120-28	s	TRANSISTOR 2SC1623-L5L6
Q277	8-729-116-64	s	TRANSISTOR 2SK508-K51
Q278	8-729-216-22	s	TRANSISTOR 2SA1162
Q279	8-729-120-28	s	TRANSISTOR 2SC1623-L5L6
Q280	8-729-216-22	s	TRANSISTOR 2SA1162
Q291	8-729-120-28	s	TRANSISTOR 2SC1623-L5L6
Q292	8-729-120-28	s	TRANSISTOR 2SC1623-L5L6
Q293	8-729-120-28	s	TRANSISTOR 2SC1623-L5L6
Q301	8-729-120-28	s	TRANSISTOR 2SC1623-L5L6
Q302	8-729-120-28	s	TRANSISTOR 2SC1623-L5L6
Q303	8-729-120-28	s	TRANSISTOR 2SC1623-L5L6
Q304	8-729-116-64	s	TRANSISTOR 2SK508-K51
Q305	8-729-216-22	s	TRANSISTOR 2SA1162
Q306	8-729-120-28	s	TRANSISTOR 2SC1623-L5L6
Q307	8-729-112-65	s	TRANSISTOR 2SA1462-Y33
R1	⚠1-216-377-11	s	METAL 4.7 5% 2W
R2	⚠1-216-377-11	s	METAL 4.7 5% 2W
R3	1-216-371-00	s	METAL 1.5 5% 2W
R4	1-216-371-00	s	METAL 1.5 5% 2W
R5	1-216-377-11	s	METAL 4.7 5% 2W
R12	1-216-695-11	s	METAL, CHIP 68K 0.5% 1/10W
R13	1-216-635-11	s	METAL, CHIP 220 0.5% 1/10W
R14	1-216-691-11	s	METAL, CHIP 47K 0.5% 1/10W
R16	1-216-647-11	s	METAL, CHIP 680 0.5% 1/10W
R19	1-216-663-11	s	METAL, CHIP 3.3K 0.5% 1/10W
R22	1-216-663-11	s	METAL, CHIP 3.3K 0.5% 1/10W
R23	1-216-691-11	s	METAL, CHIP 47K 0.5% 1/10W
R30	1-216-691-11	s	METAL, CHIP 47K 0.5% 1/10W
R32	1-216-679-11	s	METAL, CHIP 15K 0.5% 1/10W
R41	1-216-635-11	s	METAL, CHIP 220 0.5% 1/10W
R42	1-216-679-11	s	METAL, CHIP 15K 0.5% 1/10W
R47	1-216-679-11	s	METAL, CHIP 15K 0.5% 1/10W
R48	1-216-647-11	s	METAL, CHIP 680 0.5% 1/10W
R49	1-216-635-11	s	METAL, CHIP 220 0.5% 1/10W
R105	1-216-635-11	s	METAL, CHIP 220 0.5% 1/10W

NOTE: Please see page 8-9 for the parts that are not listed in the parts list.

(AD-76P BOARD used for DFS-500P)

Ref. No. or Q'ty	Part No.	SP	Description
R106	1-216-635-11	s	METAL, CHIP 220 0.5% 1/10W
R107	1-216-635-11	s	METAL, CHIP 220 0.5% 1/10W
R108	1-216-635-11	s	METAL, CHIP 220 0.5% 1/10W
R109	1-216-635-11	s	METAL, CHIP 220 0.5% 1/10W
R115	1-216-635-11	s	METAL, CHIP 220 0.5% 1/10W
R116	1-216-635-11	s	METAL, CHIP 220 0.5% 1/10W
R117	1-216-635-11	s	METAL, CHIP 220 0.5% 1/10W
R118	1-216-635-11	s	METAL, CHIP 220 0.5% 1/10W
R119	1-216-635-11	s	METAL, CHIP 220 0.5% 1/10W
R125	1-216-635-11	s	METAL, CHIP 220 0.5% 1/10W
R126	1-216-635-11	s	METAL, CHIP 220 0.5% 1/10W
R127	1-216-635-11	s	METAL, CHIP 220 0.5% 1/10W
R128	1-216-635-11	s	METAL, CHIP 220 0.5% 1/10W
R129	1-216-635-11	s	METAL, CHIP 220 0.5% 1/10W
R135	1-216-635-11	s	METAL, CHIP 220 0.5% 1/10W
R136	1-216-635-11	s	METAL, CHIP 220 0.5% 1/10W
R137	1-216-635-11	s	METAL, CHIP 220 0.5% 1/10W
R138	1-216-635-11	s	METAL, CHIP 220 0.5% 1/10W
R139	1-216-635-11	s	METAL, CHIP 220 0.5% 1/10W
R145	1-216-603-11	s	METAL, CHIP 10 0.5% 1/10W
R146	1-216-603-11	s	METAL, CHIP 10 0.5% 1/10W
R147	1-216-635-11	s	METAL, CHIP 220 0.5% 1/10W
R148	1-216-635-11	s	METAL, CHIP 220 0.5% 1/10W
R149	1-216-635-11	s	METAL, CHIP 220 0.5% 1/10W
R155	1-216-603-11	s	METAL, CHIP 10 0.5% 1/10W
R156	1-216-603-11	s	METAL, CHIP 10 0.5% 1/10W
R157	1-216-635-11	s	METAL, CHIP 220 0.5% 1/10W
R158	1-216-635-11	s	METAL, CHIP 220 0.5% 1/10W
R159	1-216-635-11	s	METAL, CHIP 220 0.5% 1/10W
R205	1-216-635-11	s	METAL, CHIP 220 0.5% 1/10W
R206	1-216-635-11	s	METAL, CHIP 220 0.5% 1/10W
R207	1-216-635-11	s	METAL, CHIP 220 0.5% 1/10W
R208	1-216-635-11	s	METAL, CHIP 220 0.5% 1/10W
R209	1-216-635-11	s	METAL, CHIP 220 0.5% 1/10W
R215	1-216-635-11	s	METAL, CHIP 220 0.5% 1/10W
R216	1-216-635-11	s	METAL, CHIP 220 0.5% 1/10W
R217	1-216-635-11	s	METAL, CHIP 220 0.5% 1/10W
R218	1-216-635-11	s	METAL, CHIP 220 0.5% 1/10W
R219	1-216-635-11	s	METAL, CHIP 220 0.5% 1/10W
R225	1-216-635-11	s	METAL, CHIP 220 0.5% 1/10W
R226	1-216-635-11	s	METAL, CHIP 220 0.5% 1/10W
R227	1-216-635-11	s	METAL, CHIP 220 0.5% 1/10W
R228	1-216-635-11	s	METAL, CHIP 220 0.5% 1/10W
R229	1-216-635-11	s	METAL, CHIP 220 0.5% 1/10W
R235	1-216-635-11	s	METAL, CHIP 220 0.5% 1/10W
R236	1-216-635-11	s	METAL, CHIP 220 0.5% 1/10W
R237	1-216-635-11	s	METAL, CHIP 220 0.5% 1/10W
R238	1-216-635-11	s	METAL, CHIP 220 0.5% 1/10W
R239	1-216-635-11	s	METAL, CHIP 220 0.5% 1/10W
R245	1-216-603-11	s	METAL, CHIP 10 0.5% 1/10W
R246	1-216-603-11	s	METAL, CHIP 10 0.5% 1/10W
R247	1-216-635-11	s	METAL, CHIP 220 0.5% 1/10W
R248	1-216-635-11	s	METAL, CHIP 220 0.5% 1/10W
R249	1-216-635-11	s	METAL, CHIP 220 0.5% 1/10W
R255	1-216-603-11	s	METAL, CHIP 10 0.5% 1/10W
R256	1-216-603-11	s	METAL, CHIP 10 0.5% 1/10W
R257	1-216-635-11	s	METAL, CHIP 220 0.5% 1/10W
R258	1-216-635-11	s	METAL, CHIP 220 0.5% 1/10W
R259	1-216-635-11	s	METAL, CHIP 220 0.5% 1/10W

(AD-76P BOARD used for DFS-500P)

Ref. No. or Q'ty	Part No.	SP	Description
R302	1-216-669-11	s	METAL, CHIP 5.6K 0.5% 1/10W
R304	1-216-635-11	s	METAL, CHIP 220 0.5% 1/10W
R305	1-216-611-11	s	METAL, CHIP 22 0.5% 1/10W
R306	1-216-611-11	s	METAL, CHIP 22 0.5% 1/10W
R308	1-216-663-11	s	METAL, CHIP 3.3K 0.5% 1/10W
R309	1-216-639-11	s	METAL, CHIP 330 0.5% 1/10W
R310	1-216-679-11	s	METAL, CHIP 15K 0.5% 1/10W
R311	1-216-673-11	s	METAL, CHIP 8.2K 0.5% 1/10W
R313	1-216-695-11	s	METAL, CHIP 68K 0.5% 1/10W
R314	1-216-663-11	s	METAL, CHIP 3.3K 0.5% 1/10W
R315	1-216-691-11	s	METAL, CHIP 47K 0.5% 1/10W
R316	1-216-687-11	s	METAL, CHIP 33K 0.5% 1/10W
R318	1-216-635-11	s	METAL, CHIP 220 0.5% 1/10W
R319	1-216-679-11	s	METAL, CHIP 15K 0.5% 1/10W
R320	1-216-663-11	s	METAL, CHIP 3.3K 0.5% 1/10W
R324	1-216-623-11	s	METAL, CHIP 68 0.5% 1/10W
R325	1-216-655-11	s	METAL, CHIP 1.5K 0.5% 1/10W
R327	1-216-683-11	s	METAL, CHIP 22K 0.5% 1/10W
R328	1-216-683-11	s	METAL, CHIP 22K 0.5% 1/10W
R330	1-218-776-11	s	METAL 1M 0.5% 1/10W
R331	1-216-637-11	s	METAL, CHIP 270 0.5% 1/10W
R336	1-216-663-11	s	METAL, CHIP 3.3K 0.5% 1/10W
R337	1-216-663-11	s	METAL, CHIP 3.3K 0.5% 1/10W
R338	1-216-635-11	s	METAL, CHIP 220 0.5% 1/10W
R339	1-216-635-11	s	METAL, CHIP 220 0.5% 1/10W
R342	1-216-669-11	s	METAL, CHIP 5.6K 0.5% 1/10W
R346	1-216-669-11	s	METAL, CHIP 5.6K 0.5% 1/10W
R349	1-216-671-11	s	METAL, CHIP 6.8K 0.5% 1/10W
R350	1-216-657-11	s	METAL, CHIP 1.8K 0.5% 1/10W
R356	1-218-772-11	s	METAL 680K 0.5% 1/10W
R357	1-216-681-11	s	METAL, CHIP 18K 0.5% 1/10W
R359	1-216-663-11	s	METAL, CHIP 3.3K 0.5% 1/10W
R361	1-216-655-11	s	METAL, CHIP 1.5K 0.5% 1/10W
R362	1-216-635-11	s	METAL, CHIP 220 0.5% 1/10W
R365	1-216-697-11	s	METAL, CHIP 82K 0.5% 1/10W
R366	1-216-691-11	s	METAL, CHIP 47K 0.5% 1/10W
R368	1-216-687-11	s	METAL, CHIP 33K 0.5% 1/10W
R369	1-216-683-11	s	METAL, CHIP 22K 0.5% 1/10W
R370	1-218-760-11	s	METAL 220K 0.5% 1/10W
R372	1-216-655-11	s	METAL, CHIP 1.5K 0.5% 1/10W
R373	1-216-643-11	s	METAL, CHIP 470 0.5% 1/10W
R384	1-216-679-11	s	METAL, CHIP 15K 0.5% 1/10W
R389	1-216-697-11	s	METAL, CHIP 82K 0.5% 1/10W
R402	1-216-669-11	s	METAL, CHIP 5.6K 0.5% 1/10W
R404	1-216-635-11	s	METAL, CHIP 220 0.5% 1/10W
R405	1-216-611-11	s	METAL, CHIP 22 0.5% 1/10W
R406	1-216-611-11	s	METAL, CHIP 22 0.5% 1/10W
R408	1-216-663-11	s	METAL, CHIP 3.3K 0.5% 1/10W
R409	1-216-639-11	s	METAL, CHIP 330 0.5% 1/10W
R410	1-216-679-11	s	METAL, CHIP 15K 0.5% 1/10W
R411	1-216-673-11	s	METAL, CHIP 8.2K 0.5% 1/10W
R413	1-216-695-11	s	METAL, CHIP 68K 0.5% 1/10W
R414	1-216-663-11	s	METAL, CHIP 3.3K 0.5% 1/10W
R415	1-216-691-11	s	METAL, CHIP 47K 0.5% 1/10W
R416	1-216-687-11	s	METAL, CHIP 33K 0.5% 1/10W
R418	1-216-635-11	s	METAL, CHIP 220 0.5% 1/10W
R419	1-216-679-11	s	METAL, CHIP 15K 0.5% 1/10W
R420	1-216-663-11	s	METAL, CHIP 3.3K 0.5% 1/10W
R424	1-216-623-11	s	METAL, CHIP 68 0.5% 1/10W

NOTE: Please see page 8-9 for the parts that are not listed in the parts list.

(AD-76P BOARD used for DFS-500P)

Ref. No. or Q'ty	Part No.	SP	Description
R425	1-216-655-11	s	METAL, CHIP 1.5K 0.5% 1/10W
R427	1-216-683-11	s	METAL, CHIP 22K 0.5% 1/10W
R428	1-216-683-11	s	METAL, CHIP 22K 0.5% 1/10W
R430	1-218-776-11	s	METAL 1M 0.5% 1/10W
R431	1-216-637-11	s	METAL, CHIP 270 0.5% 1/10W
R436	1-216-663-11	s	METAL, CHIP 3.3K 0.5% 1/10W
R437	1-216-663-11	s	METAL, CHIP 3.3K 0.5% 1/10W
R438	1-216-635-11	s	METAL, CHIP 220 0.5% 1/10W
R439	1-216-635-11	s	METAL, CHIP 220 0.5% 1/10W
R442	1-216-669-11	s	METAL, CHIP 5.6K 0.5% 1/10W
R446	1-216-669-11	s	METAL, CHIP 5.6K 0.5% 1/10W
R449	1-216-671-11	s	METAL, CHIP 6.8K 0.5% 1/10W
R450	1-216-657-11	s	METAL, CHIP 1.8K 0.5% 1/10W
R456	1-218-772-11	s	METAL 680K 0.5% 1/10W
R457	1-216-681-11	s	METAL, CHIP 18K 0.5% 1/10W
R459	1-216-663-11	s	METAL, CHIP 3.3K 0.5% 1/10W
R461	1-216-655-11	s	METAL, CHIP 1.5K 0.5% 1/10W
R462	1-216-635-11	s	METAL, CHIP 220 0.5% 1/10W
R465	1-216-697-11	s	METAL, CHIP 82K 0.5% 1/10W
R466	1-216-691-11	s	METAL, CHIP 47K 0.5% 1/10W
R468	1-216-687-11	s	METAL, CHIP 33K 0.5% 1/10W
R469	1-216-683-11	s	METAL, CHIP 22K 0.5% 1/10W
R470	1-218-760-11	s	METAL 220K 0.5% 1/10W
R472	1-216-655-11	s	METAL, CHIP 1.5K 0.5% 1/10W
R473	1-216-643-11	s	METAL, CHIP 470 0.5% 1/10W
R484	1-216-679-11	s	METAL, CHIP 15K 0.5% 1/10W
R489	1-216-697-11	s	METAL, CHIP 82K 0.5% 1/10W
R501	1-216-635-11	s	METAL, CHIP 220 0.5% 1/10W
R502	1-216-635-11	s	METAL, CHIP 220 0.5% 1/10W
R506	1-216-643-11	s	METAL, CHIP 470 0.5% 1/10W
R510	1-218-760-11	s	METAL 220K 0.5% 1/10W
R513	1-216-635-11	s	METAL, CHIP 220 0.5% 1/10W
R514	1-216-635-11	s	METAL, CHIP 220 0.5% 1/10W
R515	1-216-663-11	s	METAL, CHIP 3.3K 0.5% 1/10W
R516	1-216-609-11	s	METAL, CHIP 18 0.5% 1/10W
R517	1-216-634-11	s	METAL, CHIP 200 0.5% 1/10W
R518	1-216-635-11	s	METAL, CHIP 220 0.5% 1/10W
R522	1-216-649-11	s	METAL, CHIP 820 0.5% 1/10W
R523	1-216-663-11	s	METAL, CHIP 3.3K 0.5% 1/10W
R524	1-216-671-11	s	METAL, CHIP 6.8K 0.5% 1/10W
R526	1-216-653-11	s	METAL, CHIP 1.2K 0.5% 1/10W
R531	1-216-687-11	s	METAL, CHIP 33K 0.5% 1/10W
R532	1-216-689-11	s	METAL, CHIP 39K 0.5% 1/10W
R534	1-216-697-11	s	METAL, CHIP 82K 0.5% 1/10W
R540	1-216-673-11	s	METAL, CHIP 8.2K 0.5% 1/10W
R541	1-216-683-11	s	METAL, CHIP 22K 0.5% 1/10W
R543	1-218-768-11	s	METAL 470K 0.5% 1/10W
R544	1-216-619-11	s	METAL, CHIP 47 0.5% 1/10W
R545	1-216-639-11	s	METAL, CHIP 330 0.5% 1/10W
R546	1-216-685-11	s	METAL, CHIP 27K 0.5% 1/10W
R547	1-216-671-11	s	METAL, CHIP 6.8K 0.5% 1/10W
R548	1-216-671-11	s	METAL, CHIP 6.8K 0.5% 1/10W
R550	1-216-683-11	s	METAL, CHIP 22K 0.5% 1/10W
R552	1-216-663-11	s	METAL, CHIP 3.3K 0.5% 1/10W
R553	1-216-683-11	s	METAL, CHIP 22K 0.5% 1/10W
R558	1-216-671-11	s	METAL, CHIP 6.8K 0.5% 1/10W
R560	1-216-671-11	s	METAL, CHIP 6.8K 0.5% 1/10W
R563	1-216-649-11	s	METAL, CHIP 820 0.5% 1/10W
R566	1-216-663-11	s	METAL, CHIP 3.3K 0.5% 1/10W

(AD-76P BOARD used for DFS-500P)

Ref. No. or Q'ty	Part No.	SP	Description
R570	1-216-671-11	s	METAL, CHIP 6.8K 0.5% 1/10W
R572	1-216-671-11	s	METAL, CHIP 6.8K 0.5% 1/10W
R578	1-216-663-11	s	METAL, CHIP 3.3K 0.5% 1/10W
R581	1-218-776-11	s	METAL 1M 0.5% 1/10W
R584	1-216-635-11	s	METAL, CHIP 220 0.5% 1/10W
R588	1-216-697-11	s	METAL, CHIP 82K 0.5% 1/10W
R589	1-216-663-11	s	METAL, CHIP 3.3K 0.5% 1/10W
R595	1-218-764-11	s	METAL 330K 0.5% 1/10W
R601	1-216-635-11	s	METAL, CHIP 220 0.5% 1/10W
R602	1-216-635-11	s	METAL, CHIP 220 0.5% 1/10W
R606	1-216-643-11	s	METAL, CHIP 470 0.5% 1/10W
R610	1-218-760-11	s	METAL 220K 0.5% 1/10W
R613	1-216-635-11	s	METAL, CHIP 220 0.5% 1/10W
R614	1-216-635-11	s	METAL, CHIP 220 0.5% 1/10W
R615	1-216-663-11	s	METAL, CHIP 3.3K 0.5% 1/10W
R616	1-216-609-11	s	METAL, CHIP 18 0.5% 1/10W
R617	1-216-634-11	s	METAL, CHIP 200 0.5% 1/10W
R618	1-216-635-11	s	METAL, CHIP 220 0.5% 1/10W
R622	1-216-649-11	s	METAL, CHIP 820 0.5% 1/10W
R623	1-216-663-11	s	METAL, CHIP 3.3K 0.5% 1/10W
R624	1-216-671-11	s	METAL, CHIP 6.8K 0.5% 1/10W
R626	1-216-653-11	s	METAL, CHIP 1.2K 0.5% 1/10W
R631	1-216-687-11	s	METAL, CHIP 33K 0.5% 1/10W
R632	1-216-689-11	s	METAL, CHIP 39K 0.5% 1/10W
R634	1-216-697-11	s	METAL, CHIP 82K 0.5% 1/10W
R640	1-216-673-11	s	METAL, CHIP 8.2K 0.5% 1/10W
R641	1-216-683-11	s	METAL, CHIP 22K 0.5% 1/10W
R643	1-218-768-11	s	METAL 470K 0.5% 1/10W
R644	1-216-619-11	s	METAL, CHIP 47 0.5% 1/10W
R645	1-216-639-11	s	METAL, CHIP 330 0.5% 1/10W
R646	1-216-685-11	s	METAL, CHIP 27K 0.5% 1/10W
R647	1-216-671-11	s	METAL, CHIP 6.8K 0.5% 1/10W
R648	1-216-671-11	s	METAL, CHIP 6.8K 0.5% 1/10W
R650	1-216-683-11	s	METAL, CHIP 22K 0.5% 1/10W
R652	1-216-663-11	s	METAL, CHIP 3.3K 0.5% 1/10W
R653	1-216-683-11	s	METAL, CHIP 22K 0.5% 1/10W
R658	1-216-671-11	s	METAL, CHIP 6.8K 0.5% 1/10W
R660	1-216-671-11	s	METAL, CHIP 6.8K 0.5% 1/10W
R663	1-216-649-11	s	METAL, CHIP 820 0.5% 1/10W
R666	1-216-663-11	s	METAL, CHIP 3.3K 0.5% 1/10W
R670	1-216-671-11	s	METAL, CHIP 6.8K 0.5% 1/10W
R672	1-216-671-11	s	METAL, CHIP 6.8K 0.5% 1/10W
R678	1-216-663-11	s	METAL, CHIP 3.3K 0.5% 1/10W
R681	1-218-776-11	s	METAL 1M 0.5% 1/10W
R684	1-216-635-11	s	METAL, CHIP 220 0.5% 1/10W
R688	1-216-697-11	s	METAL, CHIP 82K 0.5% 1/10W
R689	1-216-663-11	s	METAL, CHIP 3.3K 0.5% 1/10W
R695	1-218-764-11	s	METAL 330K 0.5% 1/10W
R702	1-216-669-11	s	METAL, CHIP 5.6K 0.5% 1/10W
R704	1-216-635-11	s	METAL, CHIP 220 0.5% 1/10W
R705	1-216-663-11	s	METAL, CHIP 3.3K 0.5% 1/10W
R706	1-216-635-11	s	METAL, CHIP 220 0.5% 1/10W
R707	1-216-635-11	s	METAL, CHIP 220 0.5% 1/10W
R711	1-216-663-11	s	METAL, CHIP 3.3K 0.5% 1/10W
R714	1-216-671-11	s	METAL, CHIP 6.8K 0.5% 1/10W
R720	1-216-655-11	s	METAL, CHIP 1.5K 0.5% 1/10W
R723	1-216-635-11	s	METAL, CHIP 220 0.5% 1/10W
R725	1-216-633-11	s	METAL, CHIP 180 0.5% 1/10W
R727	1-216-663-11	s	METAL, CHIP 3.3K 0.5% 1/10W

NOTE: Please see page 8-9 for the parts that are not listed in the parts list.

(AD-76P BOARD used for DFS-500P)

Ref. No. or Q'ty	Part No.	SP	Description
R729	1-216-663-11	s	METAL, CHIP 3.3K 0.5% 1/10W
R740	1-216-655-11	s	METAL, CHIP 1.5K 0.5% 1/10W
R743	1-216-635-11	s	METAL, CHIP 220 0.5% 1/10W
R745	1-216-633-11	s	METAL, CHIP 180 0.5% 1/10W
R747	1-216-663-11	s	METAL, CHIP 3.3K 0.5% 1/10W
R749	1-216-663-11	s	METAL, CHIP 3.3K 0.5% 1/10W
R751	1-216-635-11	s	METAL, CHIP 220 0.5% 1/10W
R752	1-216-635-11	s	METAL, CHIP 220 0.5% 1/10W
R753	1-216-643-11	s	METAL, CHIP 470 0.5% 1/10W
R754	1-216-691-11	s	METAL, CHIP 47K 0.5% 1/10W
R755	1-216-691-11	s	METAL, CHIP 47K 0.5% 1/10W
R756	1-216-635-11	s	METAL, CHIP 220 0.5% 1/10W
R757	1-216-679-11	s	METAL, CHIP 15K 0.5% 1/10W
R758	1-216-663-11	s	METAL, CHIP 3.3K 0.5% 1/10W
R759	1-216-671-11	s	METAL, CHIP 6.8K 0.5% 1/10W
R761	1-216-643-11	s	METAL, CHIP 470 0.5% 1/10W
R766	1-216-635-11	s	METAL, CHIP 220 0.5% 1/10W
R767	1-216-635-11	s	METAL, CHIP 220 0.5% 1/10W
R768	1-216-691-11	s	METAL, CHIP 47K 0.5% 1/10W
R769	1-216-689-11	s	METAL, CHIP 39K 0.5% 1/10W
R770	1-216-635-11	s	METAL, CHIP 220 0.5% 1/10W
R771	1-216-679-11	s	METAL, CHIP 15K 0.5% 1/10W
R772	1-216-663-11	s	METAL, CHIP 3.3K 0.5% 1/10W
R773	1-216-663-11	s	METAL, CHIP 3.3K 0.5% 1/10W
R775	1-216-663-11	s	METAL, CHIP 3.3K 0.5% 1/10W
R786	1-216-635-11	s	METAL, CHIP 220 0.5% 1/10W
R787	1-216-635-11	s	METAL, CHIP 220 0.5% 1/10W
R788	1-216-691-11	s	METAL, CHIP 47K 0.5% 1/10W
R789	1-216-689-11	s	METAL, CHIP 39K 0.5% 1/10W
R790	1-216-635-11	s	METAL, CHIP 220 0.5% 1/10W
R791	1-216-679-11	s	METAL, CHIP 15K 0.5% 1/10W
R792	1-216-663-11	s	METAL, CHIP 3.3K 0.5% 1/10W
R793	1-216-663-11	s	METAL, CHIP 3.3K 0.5% 1/10W
R795	1-216-663-11	s	METAL, CHIP 3.3K 0.5% 1/10W
R798	1-216-679-11	s	METAL, CHIP 15K 0.5% 1/10W
R802	1-216-669-11	s	METAL, CHIP 5.6K 0.5% 1/10W
R804	1-216-635-11	s	METAL, CHIP 220 0.5% 1/10W
R805	1-216-663-11	s	METAL, CHIP 3.3K 0.5% 1/10W
R806	1-216-635-11	s	METAL, CHIP 220 0.5% 1/10W
R807	1-216-635-11	s	METAL, CHIP 220 0.5% 1/10W
R811	1-216-663-11	s	METAL, CHIP 3.3K 0.5% 1/10W
R814	1-216-671-11	s	METAL, CHIP 6.8K 0.5% 1/10W
R820	1-216-655-11	s	METAL, CHIP 1.5K 0.5% 1/10W
R823	1-216-635-11	s	METAL, CHIP 220 0.5% 1/10W
R825	1-216-633-11	s	METAL, CHIP 180 0.5% 1/10W
R827	1-216-663-11	s	METAL, CHIP 3.3K 0.5% 1/10W
R829	1-216-663-11	s	METAL, CHIP 3.3K 0.5% 1/10W
R840	1-216-655-11	s	METAL, CHIP 1.5K 0.5% 1/10W
R843	1-216-635-11	s	METAL, CHIP 220 0.5% 1/10W
R845	1-216-633-11	s	METAL, CHIP 180 0.5% 1/10W
R847	1-216-663-11	s	METAL, CHIP 3.3K 0.5% 1/10W
R849	1-216-663-11	s	METAL, CHIP 3.3K 0.5% 1/10W
R851	1-216-635-11	s	METAL, CHIP 220 0.5% 1/10W
R852	1-216-635-11	s	METAL, CHIP 220 0.5% 1/10W
R853	1-216-643-11	s	METAL, CHIP 470 0.5% 1/10W
R854	1-216-691-11	s	METAL, CHIP 47K 0.5% 1/10W
R855	1-216-691-11	s	METAL, CHIP 47K 0.5% 1/10W
R856	1-216-635-11	s	METAL, CHIP 220 0.5% 1/10W
R857	1-216-679-11	s	METAL, CHIP 15K 0.5% 1/10W

(AD-76P BOARD used for DFS-500P)

Ref. No. or Q'ty	Part No.	SP	Description
R858	1-216-663-11	s	METAL, CHIP 3.3K 0.5% 1/10W
R859	1-216-671-11	s	METAL, CHIP 6.8K 0.5% 1/10W
R861	1-216-643-11	s	METAL, CHIP 470 0.5% 1/10W
R866	1-216-635-11	s	METAL, CHIP 220 0.5% 1/10W
R867	1-216-635-11	s	METAL, CHIP 220 0.5% 1/10W
R868	1-216-691-11	s	METAL, CHIP 47K 0.5% 1/10W
R869	1-216-689-11	s	METAL, CHIP 39K 0.5% 1/10W
R870	1-216-635-11	s	METAL, CHIP 220 0.5% 1/10W
R871	1-216-679-11	s	METAL, CHIP 15K 0.5% 1/10W
R872	1-216-663-11	s	METAL, CHIP 3.3K 0.5% 1/10W
R873	1-216-663-11	s	METAL, CHIP 3.3K 0.5% 1/10W
R875	1-216-663-11	s	METAL, CHIP 3.3K 0.5% 1/10W
R886	1-216-635-11	s	METAL, CHIP 220 0.5% 1/10W
R887	1-216-635-11	s	METAL, CHIP 220 0.5% 1/10W
R888	1-216-691-11	s	METAL, CHIP 47K 0.5% 1/10W
R889	1-216-689-11	s	METAL, CHIP 39K 0.5% 1/10W
R890	1-216-635-11	s	METAL, CHIP 220 0.5% 1/10W
R891	1-216-679-11	s	METAL, CHIP 15K 0.5% 1/10W
R892	1-216-663-11	s	METAL, CHIP 3.3K 0.5% 1/10W
R893	1-216-663-11	s	METAL, CHIP 3.3K 0.5% 1/10W
R895	1-216-663-11	s	METAL, CHIP 3.3K 0.5% 1/10W
R898	1-216-679-11	s	METAL, CHIP 15K 0.5% 1/10W
R904	1-216-663-11	s	METAL, CHIP 3.3K 0.5% 1/10W
R905	1-216-663-11	s	METAL, CHIP 3.3K 0.5% 1/10W
R913	1-218-764-11	s	METAL 330K 0.5% 1/10W
R917	1-216-657-11	s	METAL, CHIP 1.8K 0.5% 1/10W
R919	1-218-772-11	s	METAL 680K 0.5% 1/10W
R920	1-216-687-11	s	METAL, CHIP 33K 0.5% 1/10W
R921	1-216-689-11	s	METAL, CHIP 39K 0.5% 1/10W
R924	1-216-669-11	s	METAL, CHIP 5.6K 0.5% 1/10W
R925	1-216-685-11	s	METAL, CHIP 27K 0.5% 1/10W
R936	1-216-679-11	s	METAL, CHIP 15K 0.5% 1/10W
R937	1-218-754-11	s	METAL, CHIP 120K 0.50% 1/10W
R941	1-216-677-11	s	METAL, CHIP 12K 0.5% 1/10W
R942	1-218-760-11	s	METAL 220K 0.5% 1/10W
R944	1-216-691-11	s	METAL, CHIP 47K 0.5% 1/10W
R949	1-216-683-11	s	METAL, CHIP 22K 0.5% 1/10W
R950	1-216-687-11	s	METAL, CHIP 33K 0.5% 1/10W
R951	1-216-683-11	s	METAL, CHIP 22K 0.5% 1/10W
R952	1-216-635-11	s	METAL, CHIP 220 0.5% 1/10W
R953	1-216-635-11	s	METAL, CHIP 220 0.5% 1/10W
R954	1-218-760-11	s	METAL 220K 0.5% 1/10W
R955	1-218-764-11	s	METAL 330K 0.5% 1/10W
R956	1-216-623-11	s	METAL, CHIP 68 0.5% 1/10W
R957	1-216-635-11	s	METAL, CHIP 220 0.5% 1/10W
R958	1-216-623-11	s	METAL, CHIP 68 0.5% 1/10W
R1013	1-218-764-11	s	METAL 330K 0.5% 1/10W
R1017	1-216-657-11	s	METAL, CHIP 1.8K 0.5% 1/10W
R1019	1-218-772-11	s	METAL 680K 0.5% 1/10W
R1020	1-216-687-11	s	METAL, CHIP 33K 0.5% 1/10W
R1021	1-216-689-11	s	METAL, CHIP 39K 0.5% 1/10W
R1024	1-216-669-11	s	METAL, CHIP 5.6K 0.5% 1/10W
R1025	1-216-685-11	s	METAL, CHIP 27K 0.5% 1/10W
R1036	1-216-679-11	s	METAL, CHIP 15K 0.5% 1/10W
R1037	1-218-754-11	s	METAL, CHIP 120K 0.50% 1/10W
R1041	1-216-677-11	s	METAL, CHIP 12K 0.5% 1/10W
R1042	1-218-760-11	s	METAL 220K 0.5% 1/10W
R1043	1-216-687-11	s	METAL, CHIP 33K 0.5% 1/10W
R1044	1-216-691-11	s	METAL, CHIP 47K 0.5% 1/10W

NOTE: Please see page 8-9 for the parts that are not listed in the parts list.

(AD-76P BOARD used for DFS-500P)

Ref. No. or Q'ty	Part No.	SP	Description
R1049	1-216-683-11	s	METAL, CHIP 22K 0.5% 1/10W
R1050	1-216-687-11	s	METAL, CHIP 33K 0.5% 1/10W
R1051	1-216-683-11	s	METAL, CHIP 22K 0.5% 1/10W
R1052	1-216-635-11	s	METAL, CHIP 220 0.5% 1/10W
R1053	1-216-635-11	s	METAL, CHIP 220 0.5% 1/10W
R1054	1-218-760-11	s	METAL 220K 0.5% 1/10W
R1055	1-218-764-11	s	METAL 330K 0.5% 1/10W
R1056	1-216-623-11	s	METAL, CHIP 68 0.5% 1/10W
R1057	1-216-635-11	s	METAL, CHIP 220 0.5% 1/10W
R1058	1-216-623-11	s	METAL, CHIP 68 0.5% 1/10W
RB1	1-231-385-00	s	RESISTOR BLOCK 4.7Kx8
RB2	1-231-385-00	s	RESISTOR BLOCK 4.7Kx8
RB3	1-231-385-00	s	RESISTOR BLOCK 4.7Kx8
RB101	1-231-385-00	s	RESISTOR BLOCK 4.7Kx8
RB102	1-231-385-00	s	RESISTOR BLOCK 4.7Kx8
RB103	1-231-385-00	s	RESISTOR BLOCK 4.7Kx8
RV101	1-228-993-00	s	RES, ADJ METAL 4.7K
RV102	1-228-993-00	s	RES, ADJ METAL 4.7K
RV103	1-228-994-00	s	RES, ADJ METAL 10K
RV111	1-230-504-11	s	RES, ADJ METAL 220
RV112	1-228-990-00	s	RES, ADJ METAL 1K
RV113	1-228-993-00	s	RES, ADJ METAL 4.7K
RV114	1-228-989-00	s	RES, ADJ METAL 470
RV115	1-228-989-00	s	RES, ADJ METAL 470
RV116	1-228-990-00	s	RES, ADJ METAL 1K
RV117	1-230-504-11	s	RES, ADJ METAL 220
RV118	1-228-989-00	s	RES, ADJ METAL 470
RV119	1-228-989-00	s	RES, ADJ METAL 470
RV121	1-228-989-00	s	RES, ADJ METAL 470
RV122	1-228-989-00	s	RES, ADJ METAL 470
RV123	1-228-989-00	s	RES, ADJ METAL 470
RV131	1-228-993-00	s	RES, ADJ METAL 4.7K
RV201	1-228-993-00	s	RES, ADJ METAL 4.7K
RV202	1-228-993-00	s	RES, ADJ METAL 4.7K
RV203	1-228-994-00	s	RES, ADJ METAL 10K
RV211	1-230-504-11	s	RES, ADJ METAL 220
RV212	1-228-990-00	s	RES, ADJ METAL 1K
RV213	1-228-993-00	s	RES, ADJ METAL 4.7K
RV214	1-228-989-00	s	RES, ADJ METAL 470
RV215	1-228-989-00	s	RES, ADJ METAL 470
RV216	1-228-990-00	s	RES, ADJ METAL 1K
RV217	1-230-504-11	s	RES, ADJ METAL 220
RV218	1-228-989-00	s	RES, ADJ METAL 470
RV219	1-228-989-00	s	RES, ADJ METAL 470
RV221	1-228-989-00	s	RES, ADJ METAL 470
RV222	1-228-989-00	s	RES, ADJ METAL 470
RV223	1-228-989-00	s	RES, ADJ METAL 470
RV231	1-228-993-00	s	RES, ADJ METAL 4.7K
RV301	1-237-503-21	s	RES, ADJ METAL 10K
RV302	1-228-990-00	s	RES, ADJ METAL 1K
S1	1-570-514-11	s	SWITCH, SLIDE
S2	1-570-514-11	s	SWITCH, SLIDE
S3	1-570-514-11	s	SWITCH, SLIDE
S4	1-570-514-11	s	SWITCH, SLIDE
X101	1-577-295-11	s	VCO, CRYSTAL 17.734475MHz
X102	1-577-259-11	s	CRYSTAL 17.734476 MHz
X201	1-577-295-11	s	VCO, CRYSTAL 17.734475MHz
X202	1-577-259-11	s	CRYSTAL 17.734476 MHz

NOTE: Please see page 8-9 for the parts that are not listed in the parts list.

CN-573 BOARD

Ref. No. or Q'ty	Part No.	SP	Description
1pc	A-8271-681-A	o	MOUNTED CIRCUIT BOARD, CN-573
1pc	3-178-137-01	o	BRACKET, D-SUB
4pcs	3-673-910-21	o	SCREW, CONNECTOR
2pcs	4-876-607-21	o	COLLAR (E), PLATE, JACK
3pcs	7-682-547-04	s	SCREW +B 3X6
C1	1-124-144-00	s	ELECT 220uF 20% 16V
C2	1-124-144-00	s	ELECT 220uF 20% 16V
CN1	1-573-580-11	s	CONNECTOR, BNC, FEMALE
CN4	1-573-580-11	s	CONNECTOR, BNC, FEMALE
CN6	1-691-274-11	s	CONNECTOR, BNC, FEMALE
CN7	1-695-807-11	s	CONNECTOR, 2-BNC, FEMALE
CN9	1-695-807-11	s	CONNECTOR, 2-BNC, FEMALE
CN11	1-573-590-12	s	CONNECTOR, CIRCULAR 4P, FEMALE
CN12	1-573-590-12	s	CONNECTOR, CIRCULAR 4P, FEMALE
CN13	1-573-590-12	s	CONNECTOR, CIRCULAR 4P, FEMALE
CN14	1-573-590-12	s	CONNECTOR, CIRCULAR 4P, FEMALE
CN15	1-573-589-11	s	CONNECTOR, CIRCULAR 12P, MALE
CN16	1-573-589-11	s	CONNECTOR, CIRCULAR 12P, MALE
CN17	1-573-589-11	s	CONNECTOR, CIRCULAR 12P, MALE
CN18	1-573-589-11	s	CONNECTOR, CIRCULAR 12P, MALE
CN21	1-568-676-11	o	CONNECTOR, D-SUB 9P, FEMALE
CN22	1-568-677-11	o	CONNECTOR, D-SUB 25PM, FEMALE
CN23	1-573-580-11	s	CONNECTOR, BNC, FEMALE
CN25	1-573-580-11	s	CONNECTOR, BNC, FEMALE
CN27	1-573-580-11	s	CONNECTOR, BNC, FEMALE
CN29	1-573-580-11	s	CONNECTOR, BNC, FEMALE
CN31	1-573-580-11	s	CONNECTOR, BNC, FEMALE
CN33	1-691-274-11	s	CONNECTOR, BNC, FEMALE
CN34	1-695-807-11	s	CONNECTOR, 2-BNC, FEMALE
CN36	1-573-590-12	s	CONNECTOR, CIRCULAR 4P, FEMALE
CN37	1-573-590-12	s	CONNECTOR, CIRCULAR 4P, FEMALE
CN38	1-573-592-11	s	CONNECTOR, CIRCULAR 12P, FEMALE
CN39	1-573-592-11	s	CONNECTOR, CIRCULAR 12P, FEMALE
CN40	1-506-482-11	s	CONNECTOR 3P, MALE
L1	1-412-525-31	s	INDUCTOR 10uH
L2	1-412-525-31	s	INDUCTOR 10uH
R1	1-215-394-00	s	METAL 75 1% 1/6W
R2	1-215-394-00	s	METAL 75 1% 1/6W
R3	1-215-394-00	s	METAL 75 1% 1/6W
S1	1-570-157-51	s	SWITCH, SLIDE
S2	1-570-157-51	s	SWITCH, SLIDE
S3	1-570-157-51	s	SWITCH, SLIDE

DA-63 BOARD used for DFS-500

Ref. No. or Q'ty	Part No.	SP	Description
1pc	A-8271-680-A	o	MOUNTED CIRCUIT BOARD, DA-63
6pcs	2-280-622-21	o	SUPPORT (M3X10), HEXAGON
2pcs	3-166-184-01	o	LEVER, PC BOARD
2pcs	3-166-185-01	s	NUT, PLATE
1pc	3-178-157-01	o	PLATE, SHIELD
8pcs	4-886-821-11	s	SCREW, S TIGHT, +PTTWH 3X6
2pcs	7-622-207-05	s	N 2.6, TYPE 2
2pcs	7-626-320-11	s	PIN, SPRING 3X8
6pcs	7-628-254-40	s	SCREW +PS 2.6X12
12pcs	7-682-947-01	s	SCREW +PSW 3X6
C1	1-124-589-11	s	ELECT 47uF 20% 16V
C3	1-124-589-11	s	ELECT 47uF 20% 16V
C5	1-124-589-11	s	ELECT 47uF 20% 16V
C7	1-124-589-11	s	ELECT 47uF 20% 16V
C9	1-124-589-11	s	ELECT 47uF 20% 16V
C11	1-124-589-11	s	ELECT 47uF 20% 16V
C13	1-124-589-11	s	ELECT 47uF 20% 16V
C15	1-124-589-11	s	ELECT 47uF 20% 16V
C17	1-124-589-11	s	ELECT 47uF 20% 16V
C19	1-124-282-00	s	ELECT, NONPOLAR 22uF 20% 25V
C20	1-163-235-11	s	CERAMIC, CHIP 22PF 5% 50V
C23	1-163-251-11	s	CERAMIC, CHIP 100PF 5% 50V
C25	1-163-251-11	s	CERAMIC, CHIP 100PF 5% 50V
C26	1-124-589-11	s	ELECT 47uF 20% 16V
C28	1-163-251-11	s	CERAMIC, CHIP 100PF 5% 50V
C29	1-124-589-11	s	ELECT 47uF 20% 16V
C31	1-131-341-00	s	TANTALUM 0.1uF 10% 35V
C32	1-124-589-11	s	ELECT 47uF 20% 16V
C34	1-124-589-11	s	ELECT 47uF 20% 16V
C36	1-124-589-11	s	ELECT 47uF 20% 16V
C39	1-164-232-11	s	CERAMIC 0.01uF 10% 100V
C40	1-124-589-11	s	ELECT 47uF 20% 16V
C43	1-124-589-11	s	ELECT 47uF 20% 16V
C45	1-124-589-11	s	ELECT 47uF 20% 16V
C47	1-124-589-11	s	ELECT 47uF 20% 16V
C50	1-163-235-11	s	CERAMIC, CHIP 22PF 5% 50V
C51	1-124-589-11	s	ELECT 47uF 20% 16V
C53	1-131-345-00	s	TANTALUM 0.47uF 10% 35V
C54	1-131-351-00	s	TANTALUM 4.7uF 10% 35V
C55	1-124-589-11	s	ELECT 47uF 20% 16V
C57	1-124-589-11	s	ELECT 47uF 20% 16V
C59	1-124-589-11	s	ELECT 47uF 20% 16V
C62	1-164-232-11	s	CERAMIC 0.01uF 10% 100V
C65	1-163-251-11	s	CERAMIC, CHIP 100PF 5% 50V
C66	1-124-589-11	s	ELECT 47uF 20% 16V
C69	1-163-251-11	s	CERAMIC, CHIP 100PF 5% 50V
C70	1-163-251-11	s	CERAMIC, CHIP 100PF 5% 50V
C71	1-124-589-11	s	ELECT 47uF 20% 16V
C77	1-163-251-11	s	CERAMIC, CHIP 100PF 5% 50V
C78	1-163-121-00	s	CERAMIC, CHIP 150PF 5% 50V
C80	1-163-251-11	s	CERAMIC, CHIP 100PF 5% 50V
C85	1-124-589-11	s	ELECT 47uF 20% 16V
C86	1-124-589-11	s	ELECT 47uF 20% 16V
C87	1-124-589-11	s	ELECT 47uF 20% 16V
C88	1-124-589-11	s	ELECT 47uF 20% 16V
C101	1-124-589-11	s	ELECT 47uF 20% 16V
C103	1-124-589-11	s	ELECT 47uF 20% 16V
C107	1-124-589-11	s	ELECT 47uF 20% 16V
C124	1-124-589-11	s	ELECT 47uF 20% 16V

(DA-63 BOARD used for DFS-500)

Ref. No. or Q'ty	Part No.	SP	Description
C130	1-124-589-11	s	ELECT 47uF 20% 16V
C131	1-124-589-11	s	ELECT 47uF 20% 16V
C132	1-124-589-11	s	ELECT 47uF 20% 16V
C201	1-124-589-11	s	ELECT 47uF 20% 16V
C203	1-124-589-11	s	ELECT 47uF 20% 16V
C205	1-124-589-11	s	ELECT 47uF 20% 16V
C207	1-124-589-11	s	ELECT 47uF 20% 16V
C209	1-124-589-11	s	ELECT 47uF 20% 16V
C215	1-124-589-11	s	ELECT 47uF 20% 16V
C217	1-124-589-11	s	ELECT 47uF 20% 16V
C219	1-124-589-11	s	ELECT 47uF 20% 16V
C221	1-124-589-11	s	ELECT 47uF 20% 16V
C223	1-124-589-11	s	ELECT 47uF 20% 16V
C225	1-124-589-11	s	ELECT 47uF 20% 16V
C227	1-124-589-11	s	ELECT 47uF 20% 16V
C229	1-124-589-11	s	ELECT 47uF 20% 16V
C301	1-124-589-11	s	ELECT 47uF 20% 16V
C303	1-124-589-11	s	ELECT 47uF 20% 16V
C306	1-163-237-11	s	CERAMIC, CHIP 27PF 5% 50V
C307	1-163-237-11	s	CERAMIC, CHIP 27PF 5% 50V
C309	1-163-237-11	s	CERAMIC, CHIP 27PF 5% 50V
C314	1-163-235-11	s	CERAMIC, CHIP 22PF 5% 50V
C318	1-124-282-00	s	ELECT, NONPOLAR 22uF 20% 25V
C319	1-124-282-00	s	ELECT, NONPOLAR 22uF 20% 25V
C320	1-124-589-11	s	ELECT 47uF 20% 16V
C322	1-124-589-11	s	ELECT 47uF 20% 16V
C324	1-163-235-11	s	CERAMIC, CHIP 22PF 5% 50V
C325	1-124-589-11	s	ELECT 47uF 20% 16V
C347	1-124-589-11	s	ELECT 47uF 20% 16V
C350	1-163-235-11	s	CERAMIC, CHIP 22PF 5% 50V
C401	1-124-589-11	s	ELECT 47uF 20% 16V
C403	1-124-589-11	s	ELECT 47uF 20% 16V
C405	1-162-638-11	s	CERAMIC, CHIP 1uF 16V
C406	1-131-374-00	s	TANTALUM 33uF 10% 16V
C407	1-163-227-11	s	CERAMIC, CHIP 10PF 5% 50V
C415	1-164-232-11	s	CERAMIC 0.01uF 10% 100V
C416	1-164-232-11	s	CERAMIC 0.01uF 10% 100V
C418	1-124-589-11	s	ELECT 47uF 20% 16V
C420	1-124-589-11	s	ELECT 47uF 20% 16V
C424	1-124-589-11	s	ELECT 47uF 20% 16V
C426	1-124-589-11	s	ELECT 47uF 20% 16V
C430	1-163-224-11	s	CERAMIC 7PF 0.25PF 50V
C431	1-163-241-11	s	CERAMIC, CHIP 39PF 5% 50V
C432	1-163-227-11	s	CERAMIC, CHIP 10PF 5% 50V
C433	1-124-589-11	s	ELECT 47uF 20% 16V
C435	1-124-589-11	s	ELECT 47uF 20% 16V
C437	1-124-589-11	s	ELECT 47uF 20% 16V
C439	1-124-589-11	s	ELECT 47uF 20% 16V
C501	1-124-589-11	s	ELECT 47uF 20% 16V
C503	1-124-589-11	s	ELECT 47uF 20% 16V
C505	1-124-589-11	s	ELECT 47uF 20% 16V
C507	1-124-589-11	s	ELECT 47uF 20% 16V
C509	1-124-589-11	s	ELECT 47uF 20% 16V
C511	1-124-589-11	s	ELECT 47uF 20% 16V
C513	1-124-589-11	s	ELECT 47uF 20% 16V
C515	1-124-589-11	s	ELECT 47uF 20% 16V
C517	1-124-589-11	s	ELECT 47uF 20% 16V
C519	1-124-589-11	s	ELECT 47uF 20% 16V
C521	1-124-282-00	s	ELECT, NONPOLAR 22uF 20% 25V

NOTE: Please see page 8-9 for the parts that are not listed in the parts list.

(DA-63 BOARD used for DFS-500)

Ref. No. or Q'ty	Part No.	SP	Description
C525	1-124-589-11	s	ELECT 47uF 20% 16V
C527	1-124-589-11	s	ELECT 47uF 20% 16V
C529	1-124-282-00	s	ELECT, NONPOLAR 22uF 20% 25V
C530	1-163-243-11	s	CERAMIC, CHIP 47PF 5% 50V
C533	1-163-243-11	s	CERAMIC, CHIP 47PF 5% 50V
C534	1-124-282-00	s	ELECT, NONPOLAR 22uF 20% 25V
C535	1-124-589-11	s	ELECT 47uF 20% 16V
C537	1-124-589-11	s	ELECT 47uF 20% 16V
C539	1-164-232-11	s	CERAMIC 0.01uF 10% 100V
C543	1-163-222-11	s	CERAMIC, CHIP 5PF 50V
C544	1-163-087-00	s	CERAMIC, CHIP 4PF 50V
C545	1-163-224-11	s	CERAMIC 7PF 0.25PF 50V
C546	1-163-224-11	s	CERAMIC 7PF 0.25PF 50V
C547	1-163-227-11	s	CERAMIC, CHIP 10PF 5% 50V
C549	1-124-589-11	s	ELECT 47uF 20% 16V
C551	1-124-589-11	s	ELECT 47uF 20% 16V
C553	1-163-087-00	s	CERAMIC, CHIP 4PF 50V
C554	1-163-227-11	s	CERAMIC, CHIP 10PF 5% 50V
C560	1-163-087-00	s	CERAMIC, CHIP 4PF 50V
C561	1-163-227-11	s	CERAMIC, CHIP 10PF 5% 50V
C563	1-124-589-11	s	ELECT 47uF 20% 16V
C565	1-124-589-11	s	ELECT 47uF 20% 16V
C567	1-124-282-00	s	ELECT, NONPOLAR 22uF 20% 25V
C573	1-162-638-11	s	CERAMIC, CHIP 1uF 16V
C574	1-131-374-00	s	TANTALUM 33uF 10% 16V
C575	1-124-589-11	s	ELECT 47uF 20% 16V
C577	1-124-589-11	s	ELECT 47uF 20% 16V
C579	1-124-282-00	s	ELECT, NONPOLAR 22uF 20% 25V
C584	1-162-638-11	s	CERAMIC, CHIP 1uF 16V
C585	1-131-374-00	s	TANTALUM 33uF 10% 16V
C586	1-163-227-11	s	CERAMIC, CHIP 10PF 5% 50V
C587	1-163-227-11	s	CERAMIC, CHIP 10PF 5% 50V
C589	1-164-232-11	s	CERAMIC 0.01uF 10% 100V
C590	1-164-232-11	s	CERAMIC 0.01uF 10% 100V
C592	1-124-589-11	s	ELECT 47uF 20% 16V
C594	1-124-589-11	s	ELECT 47uF 20% 16V
C599	1-164-232-11	s	CERAMIC 0.01uF 10% 100V
C601	1-163-224-11	s	CERAMIC 7PF 0.25PF 50V
C605	1-163-235-11	s	CERAMIC, CHIP 22PF 5% 50V
C606	1-124-589-11	s	ELECT 47uF 20% 16V
C608	1-124-589-11	s	ELECT 47uF 20% 16V
C610	1-164-232-11	s	CERAMIC 0.01uF 10% 100V
C614	1-124-589-11	s	ELECT 47uF 20% 16V
C616	1-124-589-11	s	ELECT 47uF 20% 16V
C624	1-164-232-11	s	CERAMIC 0.01uF 10% 100V
C630	1-163-243-11	s	CERAMIC, CHIP 47PF 5% 50V
C631	1-124-589-11	s	ELECT 47uF 20% 16V
C633	1-124-589-11	s	ELECT 47uF 20% 16V
C635	1-164-232-11	s	CERAMIC 0.01uF 10% 100V
C637	1-124-589-11	s	ELECT 47uF 20% 16V
C639	1-124-589-11	s	ELECT 47uF 20% 16V
C643	1-163-243-11	s	CERAMIC, CHIP 47PF 5% 50V
C646	1-164-232-11	s	CERAMIC 0.01uF 10% 100V
C650	1-163-099-00	s	CERAMIC, CHIP 18PF 5% 50V
C658	1-163-243-11	s	CERAMIC, CHIP 47PF 5% 50V
C659	1-124-282-00	s	ELECT, NONPOLAR 22uF 20% 25V
CN1	1-506-748-11	o	CONNECTOR, DIN 96P, MALE
CN2	1-506-748-11	o	CONNECTOR, DIN 96P, MALE

(DA-63 BOARD used for DFS-500)

Ref. No. or Q'ty	Part No.	SP	Description
CN3	1-506-748-11	o	CONNECTOR, DIN 96P, MALE
CN40	1-580-097-11	s	CONNECTOR, PICL-S 50P, MALE
CN50	1-580-097-11	s	CONNECTOR, PICL-S 50P, MALE
D1	8-719-104-34	s	DIODE 1S2835
D2	8-719-800-76	s	DIODE 1SS226
D3	8-719-800-76	s	DIODE 1SS226
D4	8-719-800-60	s	LED TLR214, RED
DL501	1-415-339-00	s	DELAY LINE 300nS
DL503	1-415-502-11	s	DELAY LINE 100nS
DL504	1-415-502-11	s	DELAY LINE 100nS
FL1	1-235-161-00	s	FILTER, BANDPASS 3.58MHz
FL301	1-235-786-11	s	FILTER, LOW-PASS
FL302	1-235-584-11	s	FILTER, LOW-PASS
FL401	1-235-161-00	s	FILTER, BANDPASS 3.58MHz
FL501	1-239-085-11	s	FILTER, LOW-PASS
FL502	1-239-085-11	s	FILTER, LOW-PASS
FL503	1-235-758-11	s	FILTER, LOW-PASS
FL504	1-235-758-11	s	FILTER, LOW-PASS
FL505	1-235-161-00	s	FILTER, BANDPASS 3.58MHz
IC1	8-759-520-06	s	IC NJM7809FA
IC2	8-759-700-68	s	IC NJM79L09A
IC3	8-759-231-53	s	IC TA7805S
IC4	8-741-104-00	s	IC BX1040
IC5	8-759-101-12	s	IC UPC311G2
IC6	8-752-335-47	s	IC CXD1216M
IC7	8-741-129-10	s	IC BX-1291
IC8	8-752-332-67	s	IC CXD1217M
IC9	1-808-513-12	s	IC IB-38
IC10	8-759-925-72	s	IC SN74HC02NS
IC11	8-759-948-28	s	IC SM5828P
IC12	8-759-907-81	s	IC SN74LS221NS
IC13	8-759-907-81	s	IC SN74LS221NS
IC14	8-759-926-82	s	IC SN74HC574ANS
IC15	8-759-926-82	s	IC SN74HC574ANS
IC16	8-759-926-82	s	IC SN74HC574ANS
IC17	8-759-209-20	s	IC TC4584BF
IC18	8-759-209-20	s	IC TC4584BF
IC19	8-759-989-56	s	IC SN74ALS244BNS
IC20	8-759-300-71	s	IC HD14053BFP
IC101	8-759-063-39	s	IC CXD8267Q
IC102	8-759-063-39	s	IC CXD8267Q
IC103	8-759-063-38	s	IC CXD8276Q
IC104	8-759-063-38	s	IC CXD8276Q
IC105	8-759-063-38	s	IC CXD8276Q
IC108	8-759-926-82	s	IC SN74HC574ANS
IC109	8-759-926-82	s	IC SN74HC574ANS
IC110	8-759-926-82	s	IC SN74HC574ANS
IC111	8-759-926-82	s	IC SN74HC574ANS
IC112	8-759-926-82	s	IC SN74HC574ANS
IC114	8-759-063-38	s	IC CXD8276Q
IC115	8-759-063-38	s	IC CXD8276Q
IC116	8-759-063-38	s	IC CXD8276Q
IC117	8-759-505-01	s	IC CXD8054
IC118	8-759-926-82	s	IC SN74HC574ANS
IC119	8-759-926-82	s	IC SN74HC574ANS
IC201	8-759-982-25	s	IC RC78L09A
IC202	8-759-708-05	s	IC NJM78L05A
IC203	8-759-515-12	s	IC SN74ALS574BNS

NOTE: Please see page 8-9 for the parts that are not listed in the parts list.

(DA-63 BOARD used for DFS-500)

Ref. No. or Q'ty	Part No.	SP	Description
IC204	8-759-515-12	s	IC SN74ALS574BNS
IC205	8-759-515-12	s	IC SN74ALS574BNS
IC206	8-759-515-12	s	IC SN74ALS574BNS
IC207	8-752-032-93	s	IC CXA1260Q-Z
IC208	8-752-032-96	s	IC CXA1106M
IC401	8-759-906-59	s	IC CX22017
IC402	8-759-702-07	s	IC NJM13700M
IC501	8-759-520-06	s	IC NJM7809FA
IC502	8-759-701-87	s	IC NJM7909FA
IC503	8-759-231-53	s	IC TA7805S
IC504	8-759-701-84	s	IC NJM7905FA
IC505	8-759-984-88	s	IC LM6361M
IC506	8-759-984-88	s	IC LM6361M
IC507	8-759-984-88	s	IC LM6361M
IC508	8-759-702-07	s	IC NJM13700M
IC509	8-741-135-60	s	IC BX1356
IC510	8-741-135-60	s	IC BX1356
IC511	8-741-135-60	s	IC BX1356
IC512	8-759-984-88	s	IC LM6361M
IC513	8-759-984-88	s	IC LM6361M
IC514	8-759-906-59	s	IC CX22017
IC516	8-759-702-07	s	IC NJM13700M
IC517	8-752-052-73	s	IC CXA1451M
IC518	8-759-984-88	s	IC LM6361M
IC519	8-752-052-73	s	IC CXA1451M
IC520	8-759-984-88	s	IC LM6361M
IC521	8-759-702-07	s	IC NJM13700M
IC522	8-752-052-73	s	IC CXA1451M
IC523	8-759-984-88	s	IC LM6361M
IC524	8-752-052-73	s	IC CXA1451M
IC525	8-759-702-07	s	IC NJM13700M
IC526	8-759-984-88	s	IC LM6361M
IC601	8-759-989-56	s	IC SN74ALS244BNS
IC602	8-759-989-56	s	IC SN74ALS244BNS
IC603	8-759-989-56	s	IC SN74ALS244BNS
JR1	1-216-295-00	s	METAL, CHIP 0
JR3	1-216-295-00	s	METAL, CHIP 0
JR5	1-216-295-00	s	METAL, CHIP 0
JR7	1-216-295-00	s	METAL, CHIP 0
JR9	1-216-295-00	s	METAL, CHIP 0
JR11	1-216-295-00	s	METAL, CHIP 0
JR13	1-216-295-00	s	METAL, CHIP 0
JR15	1-216-295-00	s	METAL, CHIP 0
JR17	1-216-295-00	s	METAL, CHIP 0
JR21	1-216-295-00	s	METAL, CHIP 0
JR401	1-216-295-00	s	METAL, CHIP 0
JR403	1-216-295-00	s	METAL, CHIP 0
L1	1-410-470-11	s	INDUCTOR 10uH
L2	1-410-470-11	s	INDUCTOR 10uH
L3	1-410-470-11	s	INDUCTOR 10uH
L4	1-408-413-00	s	INDUCTOR 22uH
L5	1-408-413-00	s	INDUCTOR 22uH
L6	1-410-470-11	s	INDUCTOR 10uH
L7	1-410-470-11	s	INDUCTOR 10uH
L8	1-410-470-11	s	INDUCTOR 10uH
L9	1-410-470-11	s	INDUCTOR 10uH
L10	1-410-470-11	s	INDUCTOR 10uH
L11	1-410-470-11	s	INDUCTOR 10uH

(DA-63 BOARD used for DFS-500)

Ref. No. or Q'ty	Part No.	SP	Description
L12	1-410-470-11	s	INDUCTOR 10uH
L13	1-410-470-11	s	INDUCTOR 10uH
L14	1-412-525-31	s	INDUCTOR 10uH
L15	1-412-525-31	s	INDUCTOR 10uH
L101	1-412-525-31	s	INDUCTOR 10uH
L202	1-410-470-11	s	INDUCTOR 10uH
L203	1-410-470-11	s	INDUCTOR 10uH
L204	1-410-470-11	s	INDUCTOR 10uH
L205	1-410-470-11	s	INDUCTOR 10uH
L206	1-410-470-11	s	INDUCTOR 10uH
L207	1-410-470-11	s	INDUCTOR 10uH
L301	1-410-470-11	s	INDUCTOR 10uH
L302	1-410-470-11	s	INDUCTOR 10uH
L303	1-408-418-00	s	INDUCTOR 56uH
L401	1-410-470-11	s	INDUCTOR 10uH
L402	1-408-425-00	s	INDUCTOR 220uH
L403	1-410-470-11	s	INDUCTOR 10uH
L404	1-410-470-11	s	INDUCTOR 10uH
L501	1-410-470-11	s	INDUCTOR 10uH
L502	1-410-470-11	s	INDUCTOR 10uH
L503	1-410-470-11	s	INDUCTOR 10uH
L504	1-410-470-11	s	INDUCTOR 10uH
L505	1-410-470-11	s	INDUCTOR 10uH
L506	1-408-425-00	s	INDUCTOR 220uH
L507	1-410-470-11	s	INDUCTOR 10uH
L508	1-410-470-11	s	INDUCTOR 10uH
PS1	⚠1-532-637-00	s	LINK, IC 1.0A
PS2	⚠1-532-685-00	s	LINK, IC 0.6A
PS3	⚠1-532-637-00	s	LINK, IC 1.0A
Q1	8-729-120-28	s	TRANSISTOR 2SC1623-L5L6
Q2	8-729-112-65	s	TRANSISTOR 2SA1462-Y33
Q3	8-729-120-28	s	TRANSISTOR 2SC1623-L5L6
Q4	8-729-109-44	s	TRANSISTOR 2SK94
Q5	8-729-120-28	s	TRANSISTOR 2SC1623-L5L6
Q6	8-729-175-73	s	TRANSISTOR 2SC2757
Q7	8-729-112-65	s	TRANSISTOR 2SA1462-Y33
Q8	8-729-120-28	s	TRANSISTOR 2SC1623-L5L6
Q9	8-729-109-44	s	TRANSISTOR 2SK94
Q10	8-729-216-22	s	TRANSISTOR 2SA1162
Q11	8-729-216-22	s	TRANSISTOR 2SA1162
Q201	8-729-120-28	s	TRANSISTOR 2SC1623-L5L6
Q202	8-729-120-28	s	TRANSISTOR 2SC1623-L5L6
Q203	8-729-120-28	s	TRANSISTOR 2SC1623-L5L6
Q204	8-729-120-28	s	TRANSISTOR 2SC1623-L5L6
Q301	8-729-120-28	s	TRANSISTOR 2SC1623-L5L6
Q302	8-729-120-28	s	TRANSISTOR 2SC1623-L5L6
Q303	8-729-175-73	s	TRANSISTOR 2SC2757
Q304	8-729-120-28	s	TRANSISTOR 2SC1623-L5L6
Q305	8-729-120-28	s	TRANSISTOR 2SC1623-L5L6
Q306	8-729-120-28	s	TRANSISTOR 2SC1623-L5L6
Q307	8-729-216-22	s	TRANSISTOR 2SA1162
Q308	8-729-120-28	s	TRANSISTOR 2SC1623-L5L6
Q309	8-729-175-73	s	TRANSISTOR 2SC2757
Q311	8-729-216-22	s	TRANSISTOR 2SA1162
Q312	8-729-120-28	s	TRANSISTOR 2SC1623-L5L6
Q313	8-729-175-73	s	TRANSISTOR 2SC2757
Q315	8-729-216-22	s	TRANSISTOR 2SA1162
Q316	8-729-120-28	s	TRANSISTOR 2SC1623-L5L6

NOTE: Please see page 8-9 for the parts that are not listed in the parts list.

(DA-63 BOARD used for DFS-500)

Ref. No. or Q'ty	Part No.	SP	Description
Q402	8-729-120-28	s	TRANSISTOR 2SC1623-L5L6
Q403	8-729-112-65	s	TRANSISTOR 2SA1462-Y33
Q406	8-729-216-22	s	TRANSISTOR 2SA1162
Q408	8-729-120-28	s	TRANSISTOR 2SC1623-L5L6
Q409	8-729-120-28	s	TRANSISTOR 2SC1623-L5L6
Q410	8-729-120-28	s	TRANSISTOR 2SC1623-L5L6
Q411	8-729-120-28	s	TRANSISTOR 2SC1623-L5L6
Q413	8-729-120-28	s	TRANSISTOR 2SC1623-L5L6
Q414	8-729-116-64	s	TRANSISTOR 2SK508-K51
Q415	8-729-112-65	s	TRANSISTOR 2SA1462-Y33
Q416	8-729-112-65	s	TRANSISTOR 2SA1462-Y33
Q417	8-729-112-65	s	TRANSISTOR 2SA1462-Y33
Q418	8-729-175-73	s	TRANSISTOR 2SC2757
Q419	8-729-175-73	s	TRANSISTOR 2SC2757
Q420	8-729-175-73	s	TRANSISTOR 2SC2757
Q421	8-729-175-73	s	TRANSISTOR 2SC2757
Q422	8-729-120-28	s	TRANSISTOR 2SC1623-L5L6
Q423	8-729-120-28	s	TRANSISTOR 2SC1623-L5L6
Q424	8-729-112-65	s	TRANSISTOR 2SA1462-Y33
Q425	8-729-216-22	s	TRANSISTOR 2SA1162
Q426	8-729-216-22	s	TRANSISTOR 2SA1162
Q427	8-729-120-28	s	TRANSISTOR 2SC1623-L5L6
Q428	8-729-120-28	s	TRANSISTOR 2SC1623-L5L6
Q501	8-729-120-28	s	TRANSISTOR 2SC1623-L5L6
Q502	8-729-120-28	s	TRANSISTOR 2SC1623-L5L6
Q503	8-729-216-22	s	TRANSISTOR 2SA1162
Q506	8-729-120-28	s	TRANSISTOR 2SC1623-L5L6
Q507	8-729-120-28	s	TRANSISTOR 2SC1623-L5L6
Q508	8-729-216-22	s	TRANSISTOR 2SA1162
Q512	8-729-216-22	s	TRANSISTOR 2SA1162
Q514	8-729-216-22	s	TRANSISTOR 2SA1162
Q515	8-729-120-28	s	TRANSISTOR 2SC1623-L5L6
Q516	8-729-116-64	s	TRANSISTOR 2SK508-K51
Q517	8-729-112-65	s	TRANSISTOR 2SA1462-Y33
Q518	8-729-175-73	s	TRANSISTOR 2SC2757
Q519	8-729-175-73	s	TRANSISTOR 2SC2757
Q520	8-729-112-65	s	TRANSISTOR 2SA1462-Y33
Q521	8-729-120-28	s	TRANSISTOR 2SC1623-L5L6
Q522	8-729-120-28	s	TRANSISTOR 2SC1623-L5L6
Q523	8-729-120-28	s	TRANSISTOR 2SC1623-L5L6
Q524	8-729-216-22	s	TRANSISTOR 2SA1162
Q525	8-729-216-22	s	TRANSISTOR 2SA1162
Q526	8-729-175-73	s	TRANSISTOR 2SC2757
Q527	8-729-175-73	s	TRANSISTOR 2SC2757
Q528	8-729-120-28	s	TRANSISTOR 2SC1623-L5L6
Q529	8-729-112-65	s	TRANSISTOR 2SA1462-Y33
Q530	8-729-120-28	s	TRANSISTOR 2SC1623-L5L6
Q531	8-729-120-28	s	TRANSISTOR 2SC1623-L5L6
Q532	8-729-216-22	s	TRANSISTOR 2SA1162
Q533	8-729-175-73	s	TRANSISTOR 2SC2757
Q534	8-729-175-73	s	TRANSISTOR 2SC2757
Q535	8-729-120-28	s	TRANSISTOR 2SC1623-L5L6
Q536	8-729-112-65	s	TRANSISTOR 2SA1462-Y33
Q537	8-729-216-22	s	TRANSISTOR 2SA1162
Q538	8-729-216-22	s	TRANSISTOR 2SA1162
Q540	8-729-120-28	s	TRANSISTOR 2SC1623-L5L6
Q541	8-729-116-64	s	TRANSISTOR 2SK508-K51
Q542	8-729-112-65	s	TRANSISTOR 2SA1462-Y33
Q545	8-729-175-73	s	TRANSISTOR 2SC2757

(DA-63 BOARD used for DFS-500)

Ref. No. or Q'ty	Part No.	SP	Description
Q546	8-729-216-22	s	TRANSISTOR 2SA1162
Q548	8-729-116-64	s	TRANSISTOR 2SK508-K51
Q549	8-729-112-65	s	TRANSISTOR 2SA1462-Y33
Q551	8-729-216-22	s	TRANSISTOR 2SA1162
Q553	8-729-116-64	s	TRANSISTOR 2SK508-K51
Q554	8-729-112-65	s	TRANSISTOR 2SA1462-Y33
Q556	8-729-216-22	s	TRANSISTOR 2SA1162
Q557	8-729-175-73	s	TRANSISTOR 2SC2757
Q558	8-729-216-22	s	TRANSISTOR 2SA1162
Q560	8-729-116-64	s	TRANSISTOR 2SK508-K51
Q561	8-729-112-65	s	TRANSISTOR 2SA1462-Y33
Q563	8-729-216-22	s	TRANSISTOR 2SA1162
Q564	8-729-175-73	s	TRANSISTOR 2SC2757
Q565	8-729-216-22	s	TRANSISTOR 2SA1162
Q567	8-729-116-64	s	TRANSISTOR 2SK508-K51
Q568	8-729-112-65	s	TRANSISTOR 2SA1462-Y33
Q572	8-729-120-28	s	TRANSISTOR 2SC1623-L5L6
Q573	8-729-216-22	s	TRANSISTOR 2SA1162
Q574	8-729-120-28	s	TRANSISTOR 2SC1623-L5L6
Q577	8-729-175-73	s	TRANSISTOR 2SC2757
Q578	8-729-216-22	s	TRANSISTOR 2SA1162
R2	1-216-691-11	s	METAL, CHIP 47K 0.5% 1/10W
R7	1-216-615-11	s	METAL, CHIP 33 0.5% 1/10W
R8	1-218-776-11	s	METAL 1M 0.5% 1/10W
R10	1-216-683-11	s	METAL, CHIP 22K 0.5% 1/10W
R13	1-216-695-11	s	METAL, CHIP 68K 0.5% 1/10W
R14	1-216-623-11	s	METAL, CHIP 68 0.5% 1/10W
R23	1-216-691-11	s	METAL, CHIP 47K 0.5% 1/10W
R24	1-216-691-11	s	METAL, CHIP 47K 0.5% 1/10W
R26	1-216-649-11	s	METAL, CHIP 820 0.5% 1/10W
R27	1-216-649-11	s	METAL, CHIP 820 0.5% 1/10W
R28	1-216-642-11	s	METAL, CHIP 430 0.5% 1/10W
R31	1-216-663-11	s	METAL, CHIP 3.3K 0.5% 1/10W
R36	1-216-687-11	s	METAL, CHIP 33K 0.5% 1/10W
R38	1-216-623-11	s	METAL, CHIP 68 0.5% 1/10W
R39	1-216-663-11	s	METAL, CHIP 3.3K 0.5% 1/10W
R41	1-216-683-11	s	METAL, CHIP 22K 0.5% 1/10W
R44	1-216-679-11	s	METAL, CHIP 15K 0.5% 1/10W
R45	1-216-663-11	s	METAL, CHIP 3.3K 0.5% 1/10W
R48	1-216-683-11	s	METAL, CHIP 22K 0.5% 1/10W
R49	1-216-647-11	s	METAL, CHIP 680 0.5% 1/10W
R53	1-216-671-11	s	METAL, CHIP 6.8K 0.5% 1/10W
R208	1-216-647-11	s	METAL, CHIP 680 0.5% 1/10W
R209	1-216-655-11	s	METAL, CHIP 1.5K 0.5% 1/10W
R210	1-216-647-11	s	METAL, CHIP 680 0.5% 1/10W
R211	1-216-655-11	s	METAL, CHIP 1.5K 0.5% 1/10W
R302	1-216-669-11	s	METAL, CHIP 5.6K 0.5% 1/10W
R305	1-216-669-11	s	METAL, CHIP 5.6K 0.5% 1/10W
R309	1-216-641-11	s	METAL, CHIP 390 0.5% 1/10W
R310	1-216-641-11	s	METAL, CHIP 390 0.5% 1/10W
R312	1-216-669-11	s	METAL, CHIP 5.6K 0.5% 1/10W
R313	1-216-661-11	s	METAL, CHIP 2.7K 0.5% 1/10W
R315	1-216-669-11	s	METAL, CHIP 5.6K 0.5% 1/10W
R317	1-216-669-11	s	METAL, CHIP 5.6K 0.5% 1/10W
R319	1-216-669-11	s	METAL, CHIP 5.6K 0.5% 1/10W
R320	1-216-663-11	s	METAL, CHIP 3.3K 0.5% 1/10W
R328	1-216-655-11	s	METAL, CHIP 1.5K 0.5% 1/10W
R336	1-216-663-11	s	METAL, CHIP 3.3K 0.5% 1/10W

NOTE: Please see page 8-9 for the parts that are not listed in the parts list.

(DA-63 BOARD used for DFS-500)

Ref. No. or Q'ty	Part No.	SP	Description
R339	1-216-655-11	s	METAL, CHIP 1.5K 0.5% 1/10W
R406	1-216-687-11	s	METAL, CHIP 33K 0.5% 1/10W
R407	1-216-687-11	s	METAL, CHIP 33K 0.5% 1/10W
R408	1-216-643-11	s	METAL, CHIP 470 0.5% 1/10W
R418	1-216-657-11	s	METAL, CHIP 1.8K 0.5% 1/10W
R421	1-216-673-11	s	METAL, CHIP 8.2K 0.5% 1/10W
R424	1-216-657-11	s	METAL, CHIP 1.8K 0.5% 1/10W
R425	1-216-669-11	s	METAL, CHIP 5.6K 0.5% 1/10W
R426	1-216-669-11	s	METAL, CHIP 5.6K 0.5% 1/10W
R433	1-216-655-11	s	METAL, CHIP 1.5K 0.5% 1/10W
R434	1-216-655-11	s	METAL, CHIP 1.5K 0.5% 1/10W
R437	1-216-655-11	s	METAL, CHIP 1.5K 0.5% 1/10W
R444	1-216-687-11	s	METAL, CHIP 33K 0.5% 1/10W
R445	1-216-663-11	s	METAL, CHIP 3.3K 0.5% 1/10W
R446	1-216-663-11	s	METAL, CHIP 3.3K 0.5% 1/10W
R447	1-216-635-11	s	METAL, CHIP 220 0.5% 1/10W
R449	1-216-639-11	s	METAL, CHIP 330 0.5% 1/10W
R450	1-216-663-11	s	METAL, CHIP 3.3K 0.5% 1/10W
R451	1-216-639-11	s	METAL, CHIP 330 0.5% 1/10W
R454	1-216-647-11	s	METAL, CHIP 680 0.5% 1/10W
R455	1-216-637-11	s	METAL, CHIP 270 0.5% 1/10W
R457	1-216-663-11	s	METAL, CHIP 3.3K 0.5% 1/10W
R458	1-216-309-00	s	METAL, CHIP 5.6 5% 1/10W
R459	1-216-309-00	s	METAL, CHIP 5.6 5% 1/10W
R460	1-216-309-00	s	METAL, CHIP 5.6 5% 1/10W
R461	1-216-309-00	s	METAL, CHIP 5.6 5% 1/10W
R462	1-215-394-00	s	METAL 75 1% 1/6W
R463	1-215-394-00	s	METAL 75 1% 1/6W
R464	1-215-394-00	s	METAL 75 1% 1/6W
R465	1-215-394-00	s	METAL 75 1% 1/6W
R502	1-216-673-11	s	METAL, CHIP 8.2K 0.5% 1/10W
R503	1-216-691-11	s	METAL, CHIP 47K 0.5% 1/10W
R515	1-216-643-11	s	METAL, CHIP 470 0.5% 1/10W
R519	1-216-673-11	s	METAL, CHIP 8.2K 0.5% 1/10W
R520	1-216-691-11	s	METAL, CHIP 47K 0.5% 1/10W
R532	1-216-643-11	s	METAL, CHIP 470 0.5% 1/10W
R537	1-216-640-11	s	METAL, CHIP 360 0.5% 1/10W
R539	1-216-663-11	s	METAL, CHIP 3.3K 0.5% 1/10W
R547	1-216-671-11	s	METAL, CHIP 6.8K 0.5% 1/10W
R548	1-216-647-11	s	METAL, CHIP 680 0.5% 1/10W
R556	1-216-687-11	s	METAL, CHIP 33K 0.5% 1/10W
R557	1-216-663-11	s	METAL, CHIP 3.3K 0.5% 1/10W
R558	1-216-663-11	s	METAL, CHIP 3.3K 0.5% 1/10W
R559	1-216-661-11	s	METAL, CHIP 2.7K 0.5% 1/10W
R561	1-216-665-11	s	METAL, CHIP 3.9K 0.5% 1/10W
R563	1-216-653-11	s	METAL, CHIP 1.2K 0.5% 1/10W
R564	1-216-671-11	s	METAL, CHIP 6.8K 0.5% 1/10W
R571	1-216-647-11	s	METAL, CHIP 680 0.5% 1/10W
R573	1-216-647-11	s	METAL, CHIP 680 0.5% 1/10W
R574	1-216-663-11	s	METAL, CHIP 3.3K 0.5% 1/10W
R576	1-215-394-00	s	METAL 75 1% 1/6W
R577	1-215-394-00	s	METAL 75 1% 1/6W
R578	1-216-647-11	s	METAL, CHIP 680 0.5% 1/10W
R579	1-216-663-11	s	METAL, CHIP 3.3K 0.5% 1/10W
R581	1-216-663-11	s	METAL, CHIP 3.3K 0.5% 1/10W
R583	1-215-394-00	s	METAL 75 1% 1/6W
R584	1-215-394-00	s	METAL 75 1% 1/6W
R585	1-216-649-11	s	METAL, CHIP 820 0.5% 1/10W
R588	1-216-663-11	s	METAL, CHIP 3.3K 0.5% 1/10W

(DA-63 BOARD used for DFS-500)

Ref. No. or Q'ty	Part No.	SP	Description
R590	1-215-394-00	s	METAL 75 1% 1/6W
R591	1-215-394-00	s	METAL 75 1% 1/6W
R593	1-216-673-11	s	METAL, CHIP 8.2K 0.5% 1/10W
R594	1-216-691-11	s	METAL, CHIP 47K 0.5% 1/10W
R601	1-216-643-11	s	METAL, CHIP 470 0.5% 1/10W
R605	1-216-669-11	s	METAL, CHIP 5.6K 0.5% 1/10W
R606	1-216-657-11	s	METAL, CHIP 1.8K 0.5% 1/10W
R611	1-216-663-11	s	METAL, CHIP 3.3K 0.5% 1/10W
R616	1-216-687-11	s	METAL, CHIP 33K 0.5% 1/10W
R617	1-216-687-11	s	METAL, CHIP 33K 0.5% 1/10W
R618	1-216-643-11	s	METAL, CHIP 470 0.5% 1/10W
R621	1-216-673-11	s	METAL, CHIP 8.2K 0.5% 1/10W
R622	1-216-691-11	s	METAL, CHIP 47K 0.5% 1/10W
R628	1-216-643-11	s	METAL, CHIP 470 0.5% 1/10W
R634	1-216-677-11	s	METAL, CHIP 12K 0.5% 1/10W
R635	1-216-663-11	s	METAL, CHIP 3.3K 0.5% 1/10W
R640	1-216-687-11	s	METAL, CHIP 33K 0.5% 1/10W
R641	1-216-687-11	s	METAL, CHIP 33K 0.5% 1/10W
R642	1-216-643-11	s	METAL, CHIP 470 0.5% 1/10W
R646	1-216-657-11	s	METAL, CHIP 1.8K 0.5% 1/10W
R648	1-216-657-11	s	METAL, CHIP 1.8K 0.5% 1/10W
R649	1-216-673-11	s	METAL, CHIP 8.2K 0.5% 1/10W
R650	1-216-669-11	s	METAL, CHIP 5.6K 0.5% 1/10W
R661	1-216-687-11	s	METAL, CHIP 33K 0.5% 1/10W
R662	1-216-663-11	s	METAL, CHIP 3.3K 0.5% 1/10W
R663	1-216-663-11	s	METAL, CHIP 3.3K 0.5% 1/10W
R672	1-216-655-11	s	METAL, CHIP 1.5K 0.5% 1/10W
R684	1-216-687-11	s	METAL, CHIP 33K 0.5% 1/10W
R685	1-216-663-11	s	METAL, CHIP 3.3K 0.5% 1/10W
R686	1-216-663-11	s	METAL, CHIP 3.3K 0.5% 1/10W
R688	1-216-647-11	s	METAL, CHIP 680 0.5% 1/10W
R692	1-215-394-00	s	METAL 75 1% 1/6W
R699	1-216-649-11	s	METAL, CHIP 820 0.5% 1/10W
R710	1-216-687-11	s	METAL, CHIP 33K 0.5% 1/10W
R711	1-216-663-11	s	METAL, CHIP 3.3K 0.5% 1/10W
R712	1-216-663-11	s	METAL, CHIP 3.3K 0.5% 1/10W
R714	1-216-647-11	s	METAL, CHIP 680 0.5% 1/10W
R718	1-215-394-00	s	METAL 75 1% 1/6W
R721	1-216-640-11	s	METAL, CHIP 360 0.5% 1/10W
R727	1-216-655-11	s	METAL, CHIP 1.5K 0.5% 1/10W
R730	1-216-643-11	s	METAL, CHIP 470 0.5% 1/10W
R732	1-216-663-11	s	METAL, CHIP 3.3K 0.5% 1/10W
R739	1-216-687-11	s	METAL, CHIP 33K 0.5% 1/10W
R740	1-216-663-11	s	METAL, CHIP 3.3K 0.5% 1/10W
R741	1-216-663-11	s	METAL, CHIP 3.3K 0.5% 1/10W
R743	1-216-647-11	s	METAL, CHIP 680 0.5% 1/10W
R747	1-215-394-00	s	METAL 75 1% 1/6W
R750	1-216-640-11	s	METAL, CHIP 360 0.5% 1/10W
R756	1-216-655-11	s	METAL, CHIP 1.5K 0.5% 1/10W
R759	1-216-643-11	s	METAL, CHIP 470 0.5% 1/10W
R761	1-216-663-11	s	METAL, CHIP 3.3K 0.5% 1/10W
R768	1-216-687-11	s	METAL, CHIP 33K 0.5% 1/10W
R769	1-216-663-11	s	METAL, CHIP 3.3K 0.5% 1/10W
R770	1-216-663-11	s	METAL, CHIP 3.3K 0.5% 1/10W
R772	1-216-647-11	s	METAL, CHIP 680 0.5% 1/10W
R776	1-215-394-00	s	METAL 75 1% 1/6W
R778	1-216-640-11	s	METAL, CHIP 360 0.5% 1/10W
R779	1-216-640-11	s	METAL, CHIP 360 0.5% 1/10W
R780	1-215-394-00	s	METAL 75 1% 1/6W

NOTE: Please see page 8-9 for the parts that are not listed in the parts list.

(DA-63 BOARD used for DFS-500)

Ref. No. or Q'ty	Part No.	SP	Description
R781	1-215-394-00	s	METAL 75 1% 1/6W
R782	1-215-394-00	s	METAL 75 1% 1/6W
R797	1-216-643-11	s	METAL, CHIP 470 0.5% 1/10W
R798	1-216-669-11	s	METAL, CHIP 5.6K 0.5% 1/10W
R799	1-216-669-11	s	METAL, CHIP 5.6K 0.5% 1/10W
R808	1-216-655-11	s	METAL, CHIP 1.5K 0.5% 1/10W
R811	1-216-643-11	s	METAL, CHIP 470 0.5% 1/10W
RB101	1-231-411-00	s	RESISTOR BLOCK 100Kx8
RB102	1-231-411-00	s	RESISTOR BLOCK 100Kx8
RB103	1-231-411-00	s	RESISTOR BLOCK 100Kx8
RB104	1-231-411-00	s	RESISTOR BLOCK 100Kx8
RB105	1-231-411-00	s	RESISTOR BLOCK 100Kx8
RB106	1-231-411-00	s	RESISTOR BLOCK 100Kx8
RB107	1-231-411-00	s	RESISTOR BLOCK 100Kx8
RB108	1-231-411-00	s	RESISTOR BLOCK 100Kx8
RB109	1-231-411-00	s	RESISTOR BLOCK 100Kx8
RB110	1-231-411-00	s	RESISTOR BLOCK 100Kx8
RB111	1-231-411-00	s	RESISTOR BLOCK 100Kx8
RB112	1-231-411-00	s	RESISTOR BLOCK 100Kx8
RB113	1-231-411-00	s	RESISTOR BLOCK 100Kx8
RB114	1-231-411-00	s	RESISTOR BLOCK 100Kx8
RB115	1-231-411-00	s	RESISTOR BLOCK 100Kx8
RB202	1-231-385-00	s	RESISTOR BLOCK 4.7Kx8
RB203	1-231-385-00	s	RESISTOR BLOCK 4.7Kx8
RB204	1-231-385-00	s	RESISTOR BLOCK 4.7Kx8
RB205	1-231-385-00	s	RESISTOR BLOCK 4.7Kx8
RV1	1-228-993-00	s	RES, ADJ METAL 4.7K
RV2	1-237-503-21	s	RES, ADJ METAL 10K
RV3	1-237-502-21	s	RES, ADJ METAL 5K
RV4	1-228-995-00	s	RES, ADJ METAL 22K
RV5	1-228-995-00	s	RES, ADJ METAL 22K
RV6	1-228-995-00	s	RES, ADJ METAL 22K
RV7	1-228-995-00	s	RES, ADJ METAL 22K
RV8	1-228-995-00	s	RES, ADJ METAL 22K
RV9	1-228-994-00	s	RES, ADJ METAL 10K
RV10	1-228-994-00	s	RES, ADJ METAL 10K
RV11	1-237-501-21	s	RES, ADJ METAL 2K
RV301	1-228-989-00	s	RES, ADJ METAL 470
RV402	1-228-993-00	s	RES, ADJ METAL 4.7K
RV404	1-237-500-21	s	RES, ADJ METAL 1K
RV406	1-228-990-00	s	RES, ADJ METAL 1K
RV504	1-228-993-00	s	RES, ADJ METAL 4.7K
RV506	1-228-991-00	s	RES, ADJ METAL 2.2K
RV507	1-237-500-21	s	RES, ADJ METAL 1K
RV508	1-237-500-21	s	RES, ADJ METAL 1K
RV509	1-237-500-21	s	RES, ADJ METAL 1K
RV511	1-228-993-00	s	RES, ADJ METAL 4.7K
RV512	1-228-991-00	s	RES, ADJ METAL 2.2K
RV514	1-228-993-00	s	RES, ADJ METAL 4.7K
RV515	1-228-989-00	s	RES, ADJ METAL 470
RV516	1-237-501-21	s	RES, ADJ METAL 2K
RV518	1-228-990-00	s	RES, ADJ METAL 1K
RV520	1-237-501-21	s	RES, ADJ METAL 2K
RV521	1-228-989-00	s	RES, ADJ METAL 470
RV522	1-237-501-21	s	RES, ADJ METAL 2K
RV523	1-228-989-00	s	RES, ADJ METAL 470
RV524	1-237-501-21	s	RES, ADJ METAL 2K
RV525	1-228-990-00	s	RES, ADJ METAL 1K

NOTE: Please see page 8-9 for the parts that are not listed in the parts list.

(DA-63 BOARD used for DFS-500)

Ref. No. or Q'ty	Part No.	SP	Description
RV526	1-228-989-00	s	RES, ADJ METAL 470
S1	1-570-373-12	s	SWITCH, SLIDE
S2	1-554-399-00	s	SWITCH, TOGGLE
S3	1-553-252-00	s	SWITCH, DIGITAL
S101	1-554-027-00	s	SWITCH, DIGITAL
S102	1-570-514-11	s	SWITCH, SLIDE
S103	1-554-027-00	s	SWITCH, DIGITAL
TH1	1-800-071-11	s	THERMISTER, S-300
VCO1	1-577-089-11	s	VCO, CRYSTAL 14.318180MHz
VCO2	1-577-089-11	s	VCO, CRYSTAL 14.318180MHz

DA-63P BOARD used for DFS-500P

Ref. No. or Q'ty	Part No.	SP	Description
1pc	A-8271-692-A	o	MOUNTED CIRCUIT BOARD, DA-63P
6pcs	2-280-622-21	o	SUPPORT (M3X10), HEXAGON
2pcs	3-166-184-01	o	LEVER, PC BOARD
2pcs	3-166-185-01	s	NUT, PLATE
1pc	3-178-157-01	o	PLATE, SHIELD
8pcs	4-886-821-11	s	SCREW, S TIGHT, +PTTWH 3X6
2pcs	7-622-207-05	s	N 2.6, TYPE 2
2pcs	7-626-320-11	s	PIN, SPRING 3X8
6pcs	7-628-254-40	s	SCREW +PS 2.6X12
12pcs	7-682-947-01	s	SCREW +PSW 3X6
C1	1-124-589-11	s	ELECT 47uF 20% 16V
C3	1-124-589-11	s	ELECT 47uF 20% 16V
C5	1-124-589-11	s	ELECT 47uF 20% 16V
C7	1-124-589-11	s	ELECT 47uF 20% 16V
C9	1-124-589-11	s	ELECT 47uF 20% 16V
C11	1-124-589-11	s	ELECT 47uF 20% 16V
C13	1-124-589-11	s	ELECT 47uF 20% 16V
C15	1-124-589-11	s	ELECT 47uF 20% 16V
C17	1-124-589-11	s	ELECT 47uF 20% 16V
C19	1-124-282-00	s	ELECT, NONPOLAR 22uF 20% 25V
C20	1-163-235-11	s	CERAMIC, CHIP 22PF 5% 50V
C23	1-163-113-00	s	CERAMIC, CHIP 68PF 5% 50V
C25	1-163-113-00	s	CERAMIC, CHIP 68PF 5% 50V
C26	1-124-589-11	s	ELECT 47uF 20% 16V
C28	1-163-251-11	s	CERAMIC, CHIP 100PF 5% 50V
C29	1-124-589-11	s	ELECT 47uF 20% 16V
C31	1-131-341-00	s	TANTALUM 0.1uF 10% 35V
C32	1-124-589-11	s	ELECT 47uF 20% 16V
C34	1-124-589-11	s	ELECT 47uF 20% 16V
C36	1-124-589-11	s	ELECT 47uF 20% 16V
C39	1-164-232-11	s	CERAMIC 0.01uF 10% 100V
C40	1-124-589-11	s	ELECT 47uF 20% 16V
C43	1-124-589-11	s	ELECT 47uF 20% 16V
C45	1-124-589-11	s	ELECT 47uF 20% 16V
C47	1-124-589-11	s	ELECT 47uF 20% 16V
C50	1-163-235-11	s	CERAMIC, CHIP 22PF 5% 50V
C51	1-124-589-11	s	ELECT 47uF 20% 16V
C53	1-131-345-00	s	TANTALUM 0.47uF 10% 35V
C54	1-131-351-00	s	TANTALUM 4.7uF 10% 35V
C55	1-124-589-11	s	ELECT 47uF 20% 16V
C57	1-124-589-11	s	ELECT 47uF 20% 16V
C59	1-124-589-11	s	ELECT 47uF 20% 16V
C62	1-164-232-11	s	CERAMIC 0.01uF 10% 100V
C65	1-163-251-11	s	CERAMIC, CHIP 100PF 5% 50V
C66	1-124-589-11	s	ELECT 47uF 20% 16V
C69	1-163-251-11	s	CERAMIC, CHIP 100PF 5% 50V
C70	1-163-251-11	s	CERAMIC, CHIP 100PF 5% 50V
C71	1-124-589-11	s	ELECT 47uF 20% 16V
C77	1-163-251-11	s	CERAMIC, CHIP 100PF 5% 50V
C78	1-163-121-00	s	CERAMIC, CHIP 150PF 5% 50V
C80	1-163-251-11	s	CERAMIC, CHIP 100PF 5% 50V
C85	1-124-589-11	s	ELECT 47uF 20% 16V
C86	1-124-589-11	s	ELECT 47uF 20% 16V
C87	1-124-589-11	s	ELECT 47uF 20% 16V
C88	1-124-589-11	s	ELECT 47uF 20% 16V
C101	1-124-589-11	s	ELECT 47uF 20% 16V
C103	1-124-589-11	s	ELECT 47uF 20% 16V
C107	1-124-589-11	s	ELECT 47uF 20% 16V
C124	1-124-589-11	s	ELECT 47uF 20% 16V

(DA-63P BOARD used for DFS-500P)

Ref. No. or Q'ty	Part No.	SP	Description
C130	1-124-589-11	s	ELECT 47uF 20% 16V
C131	1-124-589-11	s	ELECT 47uF 20% 16V
C132	1-124-589-11	s	ELECT 47uF 20% 16V
C201	1-124-589-11	s	ELECT 47uF 20% 16V
C203	1-124-589-11	s	ELECT 47uF 20% 16V
C205	1-124-589-11	s	ELECT 47uF 20% 16V
C207	1-124-589-11	s	ELECT 47uF 20% 16V
C209	1-124-589-11	s	ELECT 47uF 20% 16V
C215	1-124-589-11	s	ELECT 47uF 20% 16V
C217	1-124-589-11	s	ELECT 47uF 20% 16V
C219	1-124-589-11	s	ELECT 47uF 20% 16V
C221	1-124-589-11	s	ELECT 47uF 20% 16V
C223	1-124-589-11	s	ELECT 47uF 20% 16V
C225	1-124-589-11	s	ELECT 47uF 20% 16V
C227	1-124-589-11	s	ELECT 47uF 20% 16V
C229	1-124-589-11	s	ELECT 47uF 20% 16V
C301	1-124-589-11	s	ELECT 47uF 20% 16V
C303	1-124-589-11	s	ELECT 47uF 20% 16V
C306	1-163-235-11	s	CERAMIC, CHIP 22PF 5% 50V
C307	1-163-235-11	s	CERAMIC, CHIP 22PF 5% 50V
C309	1-163-237-11	s	CERAMIC, CHIP 27PF 5% 50V
C314	1-163-235-11	s	CERAMIC, CHIP 22PF 5% 50V
C318	1-124-282-00	s	ELECT, NONPOLAR 22uF 20% 25V
C319	1-124-282-00	s	ELECT, NONPOLAR 22uF 20% 25V
C320	1-124-589-11	s	ELECT 47uF 20% 16V
C322	1-124-589-11	s	ELECT 47uF 20% 16V
C324	1-163-235-11	s	CERAMIC, CHIP 22PF 5% 50V
C325	1-124-589-11	s	ELECT 47uF 20% 16V
C347	1-124-589-11	s	ELECT 47uF 20% 16V
C350	1-163-235-11	s	CERAMIC, CHIP 22PF 5% 50V
C401	1-124-589-11	s	ELECT 47uF 20% 16V
C403	1-124-589-11	s	ELECT 47uF 20% 16V
C405	1-162-638-11	s	CERAMIC, CHIP 1uF 16V
C406	1-131-374-00	s	TANTALUM 33uF 10% 16V
C407	1-163-227-11	s	CERAMIC, CHIP 10PF 5% 50V
C411	1-162-638-11	s	CERAMIC, CHIP 1uF 16V
C412	1-131-374-00	s	TANTALUM 33uF 10% 16V
C413	1-163-227-11	s	CERAMIC, CHIP 10PF 5% 50V
C415	1-164-232-11	s	CERAMIC 0.01uF 10% 100V
C416	1-164-232-11	s	CERAMIC 0.01uF 10% 100V
C417	1-124-589-11	s	ELECT 47uF 20% 16V
C418	1-124-589-11	s	ELECT 47uF 20% 16V
C420	1-124-589-11	s	ELECT 47uF 20% 16V
C424	1-124-589-11	s	ELECT 47uF 20% 16V
C426	1-124-589-11	s	ELECT 47uF 20% 16V
C430	1-163-227-11	s	CERAMIC, CHIP 10PF 5% 50V
C431	1-163-241-11	s	CERAMIC, CHIP 39PF 5% 50V
C432	1-163-227-11	s	CERAMIC, CHIP 10PF 5% 50V
C433	1-124-589-11	s	ELECT 47uF 20% 16V
C435	1-124-589-11	s	ELECT 47uF 20% 16V
C437	1-124-589-11	s	ELECT 47uF 20% 16V
C439	1-124-589-11	s	ELECT 47uF 20% 16V
C501	1-124-589-11	s	ELECT 47uF 20% 16V
C503	1-124-589-11	s	ELECT 47uF 20% 16V
C505	1-124-589-11	s	ELECT 47uF 20% 16V
C507	1-124-589-11	s	ELECT 47uF 20% 16V
C509	1-124-589-11	s	ELECT 47uF 20% 16V
C511	1-124-589-11	s	ELECT 47uF 20% 16V
C513	1-124-589-11	s	ELECT 47uF 20% 16V

NOTE: Please see page 8-9 for the parts that are not listed in the parts list.

(DA-63P BOARD used for DFS-500P)

Ref. No. or Q'ty	Part No.	SP	Description
C515	1-124-589-11	s	ELECT 47uF 20% 16V
C517	1-124-589-11	s	ELECT 47uF 20% 16V
C519	1-124-589-11	s	ELECT 47uF 20% 16V
C521	1-124-282-00	s	ELECT, NONPOLAR 22uF 20% 25V
C525	1-124-589-11	s	ELECT 47uF 20% 16V
C527	1-124-589-11	s	ELECT 47uF 20% 16V
C529	1-124-282-00	s	ELECT, NONPOLAR 22uF 20% 25V
C530	1-163-243-11	s	CERAMIC, CHIP 47PF 5% 50V
C533	1-163-243-11	s	CERAMIC, CHIP 47PF 5% 50V
C534	1-124-282-00	s	ELECT, NONPOLAR 22uF 20% 25V
C535	1-124-589-11	s	ELECT 47uF 20% 16V
C537	1-124-589-11	s	ELECT 47uF 20% 16V
C539	1-164-232-11	s	CERAMIC 0.01uF 10% 100V
C543	1-163-222-11	s	CERAMIC, CHIP 5PF 50V
C544	1-163-087-00	s	CERAMIC, CHIP 4PF 50V
C545	1-163-224-11	s	CERAMIC 7PF 0.25PF 50V
C546	1-163-224-11	s	CERAMIC 7PF 0.25PF 50V
C547	1-163-227-11	s	CERAMIC, CHIP 10PF 5% 50V
C549	1-124-589-11	s	ELECT 47uF 20% 16V
C551	1-124-589-11	s	ELECT 47uF 20% 16V
C553	1-163-087-00	s	CERAMIC, CHIP 4PF 50V
C554	1-163-227-11	s	CERAMIC, CHIP 10PF 5% 50V
C560	1-163-087-00	s	CERAMIC, CHIP 4PF 50V
C561	1-163-227-11	s	CERAMIC, CHIP 10PF 5% 50V
C563	1-124-589-11	s	ELECT 47uF 20% 16V
C565	1-124-589-11	s	ELECT 47uF 20% 16V
C567	1-124-282-00	s	ELECT, NONPOLAR 22uF 20% 25V
C570	1-124-589-11	s	ELECT 47uF 20% 16V
C573	1-162-638-11	s	CERAMIC, CHIP 1uF 16V
C574	1-131-374-00	s	TANTALUM 33uF 10% 16V
C575	1-124-589-11	s	ELECT 47uF 20% 16V
C577	1-124-589-11	s	ELECT 47uF 20% 16V
C579	1-124-282-00	s	ELECT, NONPOLAR 22uF 20% 25V
C584	1-162-638-11	s	CERAMIC, CHIP 1uF 16V
C585	1-131-374-00	s	TANTALUM 33uF 10% 16V
C586	1-163-227-11	s	CERAMIC, CHIP 10PF 5% 50V
C587	1-163-227-11	s	CERAMIC, CHIP 10PF 5% 50V
C589	1-164-232-11	s	CERAMIC 0.01uF 10% 100V
C590	1-164-232-11	s	CERAMIC 0.01uF 10% 100V
C591	1-124-589-11	s	ELECT 47uF 20% 16V
C592	1-124-589-11	s	ELECT 47uF 20% 16V
C594	1-124-589-11	s	ELECT 47uF 20% 16V
C599	1-164-232-11	s	CERAMIC 0.01uF 10% 100V
C601	1-163-227-11	s	CERAMIC, CHIP 10PF 5% 50V
C605	1-163-235-11	s	CERAMIC, CHIP 22PF 5% 50V
C606	1-124-589-11	s	ELECT 47uF 20% 16V
C608	1-124-589-11	s	ELECT 47uF 20% 16V
C610	1-164-232-11	s	CERAMIC 0.01uF 10% 100V
C614	1-124-589-11	s	ELECT 47uF 20% 16V
C616	1-124-589-11	s	ELECT 47uF 20% 16V
C624	1-164-232-11	s	CERAMIC 0.01uF 10% 100V
C630	1-163-243-11	s	CERAMIC, CHIP 47PF 5% 50V
C631	1-124-589-11	s	ELECT 47uF 20% 16V
C633	1-124-589-11	s	ELECT 47uF 20% 16V
C635	1-164-232-11	s	CERAMIC 0.01uF 10% 100V
C637	1-124-589-11	s	ELECT 47uF 20% 16V
C639	1-124-589-11	s	ELECT 47uF 20% 16V
C643	1-163-243-11	s	CERAMIC, CHIP 47PF 5% 50V
C646	1-164-232-11	s	CERAMIC 0.01uF 10% 100V

(DA-63P BOARD used for DFS-500P)

Ref. No. or Q'ty	Part No.	SP	Description
C650	1-163-099-00	s	CERAMIC, CHIP 18PF 5% 50V
C658	1-163-243-11	s	CERAMIC, CHIP 47PF 5% 50V
C659	1-124-282-00	s	ELECT, NONPOLAR 22uF 20% 25V
CN1	1-506-748-11	o	CONNECTOR, DIN 96P, MALE
CN2	1-506-748-11	o	CONNECTOR, DIN 96P, MALE
CN3	1-506-748-11	o	CONNECTOR, DIN 96P, MALE
CN40	1-580-097-11	s	CONNECTOR, PICL-S 50P, MALE
CN50	1-580-097-11	s	CONNECTOR, PICL-S 50P, MALE
D1	8-719-104-34	s	DIODE 1S2835
D2	8-719-800-76	s	DIODE 1SS226
D3	8-719-800-76	s	DIODE 1SS226
D4	8-719-800-60	s	LED TLR214, RED
DL501	1-415-339-00	s	DELAY LINE 300nS
DL503	1-415-502-11	s	DELAY LINE 100nS
DL504	1-415-502-11	s	DELAY LINE 100nS
FL1	1-235-181-00	s	FILTER, BANDPASS 4.43MHz
FL301	1-235-584-11	s	FILTER, LOW-PASS
FL302	1-235-584-11	s	FILTER, LOW-PASS
FL401	1-235-181-00	s	FILTER, BANDPASS 4.43MHz
FL501	1-239-085-11	s	FILTER, LOW-PASS
FL502	1-239-085-11	s	FILTER, LOW-PASS
FL503	1-235-758-11	s	FILTER, LOW-PASS
FL504	1-235-758-11	s	FILTER, LOW-PASS
FL505	1-235-181-00	s	FILTER, BANDPASS 4.43MHz
IC1	8-759-520-06	s	IC NJM7809FA
IC2	8-759-700-68	s	IC NJM79L09A
IC3	8-759-231-53	s	IC TA7805S
IC4	8-741-104-00	s	IC BX1040
IC5	8-759-101-12	s	IC UPC311G2
IC6	8-752-335-47	s	IC CXD1216M
IC7	8-741-129-10	s	IC BX-1291
IC8	8-752-332-67	s	IC CXD1217M
IC9	1-808-513-12	s	IC IB-38
IC10	8-759-925-72	s	IC SN74HC02NS
IC11	8-759-948-28	s	IC SM5828P
IC12	8-759-907-81	s	IC SN74LS221NS
IC13	8-759-907-81	s	IC SN74LS221NS
IC14	8-759-926-82	s	IC SN74HC574ANS
IC15	8-759-926-82	s	IC SN74HC574ANS
IC16	8-759-926-82	s	IC SN74HC574ANS
IC17	8-759-209-20	s	IC TC4584BF
IC18	8-759-209-20	s	IC TC4584BF
IC19	8-759-989-56	s	IC SN74ALS244BNS
IC20	8-759-300-71	s	IC HD14053BFP
IC101	8-759-063-39	s	IC CXD8267Q
IC102	8-759-063-39	s	IC CXD8267Q
IC103	8-759-063-38	s	IC CXD8276Q
IC104	8-759-063-38	s	IC CXD8276Q
IC105	8-759-063-38	s	IC CXD8276Q
IC108	8-759-926-82	s	IC SN74HC574ANS
IC109	8-759-926-82	s	IC SN74HC574ANS
IC110	8-759-926-82	s	IC SN74HC574ANS
IC111	8-759-926-82	s	IC SN74HC574ANS
IC112	8-759-926-82	s	IC SN74HC574ANS
IC114	8-759-063-38	s	IC CXD8276Q
IC115	8-759-063-38	s	IC CXD8276Q
IC116	8-759-063-38	s	IC CXD8276Q
IC117	8-759-505-01	s	IC CXD8054

NOTE: Please see page 8-9 for the parts that are not listed in the parts list.

(DA-63P BOARD used for DFS-500P)

Ref. No. or Q'ty	Part No.	SP	Description
IC118	8-759-926-82	s	IC SN74HC574ANS
IC119	8-759-926-82	s	IC SN74HC574ANS
IC201	8-759-982-25	s	IC RC78L09A
IC202	8-759-708-05	s	IC NJM78L05A
IC203	8-759-515-12	s	IC SN74ALS574BNS
IC204	8-759-515-12	s	IC SN74ALS574BNS
IC205	8-759-515-12	s	IC SN74ALS574BNS
IC206	8-759-515-12	s	IC SN74ALS574BNS
IC207	8-752-032-93	s	IC CXA1260Q-Z
IC208	8-752-032-96	s	IC CXA1106M
IC401	8-759-906-59	s	IC CX22017
IC402	8-759-702-07	s	IC NJM13700M
IC501	8-759-520-06	s	IC NJM7809FA
IC502	8-759-701-87	s	IC NJM7909FA
IC503	8-759-231-53	s	IC TA7805S
IC504	8-759-701-84	s	IC NJM7905FA
IC505	8-759-984-88	s	IC LM6361M
IC506	8-759-984-88	s	IC LM6361M
IC507	8-759-984-88	s	IC LM6361M
IC508	8-759-702-07	s	IC NJM13700M
IC509	8-741-135-60	s	IC BX1356
IC510	8-741-135-60	s	IC BX1356
IC511	8-741-135-60	s	IC BX1356
IC512	8-759-984-88	s	IC LM6361M
IC513	8-759-984-88	s	IC LM6361M
IC514	8-759-906-59	s	IC CX22017
IC516	8-759-702-07	s	IC NJM13700M
IC517	8-752-052-73	s	IC CXA1451M
IC518	8-759-984-88	s	IC LM6361M
IC519	8-752-052-73	s	IC CXA1451M
IC520	8-759-984-88	s	IC LM6361M
IC521	8-759-702-07	s	IC NJM13700M
IC522	8-752-052-73	s	IC CXA1451M
IC523	8-759-984-88	s	IC LM6361M
IC524	8-752-052-73	s	IC CXA1451M
IC525	8-759-702-07	s	IC NJM13700M
IC526	8-759-984-88	s	IC LM6361M
IC601	8-759-989-56	s	IC SN74ALS244BNS
IC602	8-759-989-56	s	IC SN74ALS244BNS
IC603	8-759-989-56	s	IC SN74ALS244BNS
JR2	1-216-295-00	s	METAL, CHIP 0
JR4	1-216-295-00	s	METAL, CHIP 0
JR6	1-216-295-00	s	METAL, CHIP 0
JR10	1-216-295-00	s	METAL, CHIP 0
JR12	1-216-295-00	s	METAL, CHIP 0
JR14	1-216-295-00	s	METAL, CHIP 0
JR16	1-216-295-00	s	METAL, CHIP 0
JR18	1-216-295-00	s	METAL, CHIP 0
JR20	1-216-295-00	s	METAL, CHIP 0
JR22	1-216-295-00	s	METAL, CHIP 0
JR402	1-216-295-00	s	METAL, CHIP 0
L1	1-410-470-11	s	INDUCTOR 10uH
L2	1-410-470-11	s	INDUCTOR 10uH
L3	1-410-470-11	s	INDUCTOR 10uH
L4	1-408-413-00	s	INDUCTOR 22uH
L5	1-408-413-00	s	INDUCTOR 22uH
L6	1-410-470-11	s	INDUCTOR 10uH
L7	1-410-470-11	s	INDUCTOR 10uH

(DA-63P BOARD used for DFS-500P)

Ref. No. or Q'ty	Part No.	SP	Description
L8	1-410-470-11	s	INDUCTOR 10uH
L9	1-410-470-11	s	INDUCTOR 10uH
L10	1-410-470-11	s	INDUCTOR 10uH
L11	1-410-470-11	s	INDUCTOR 10uH
L12	1-410-470-11	s	INDUCTOR 10uH
L13	1-410-470-11	s	INDUCTOR 10uH
L14	1-412-525-31	s	INDUCTOR 10uH
L15	1-412-525-31	s	INDUCTOR 10uH
L101	1-412-525-31	s	INDUCTOR 10uH
L202	1-410-470-11	s	INDUCTOR 10uH
L203	1-410-470-11	s	INDUCTOR 10uH
L204	1-410-470-11	s	INDUCTOR 10uH
L205	1-410-470-11	s	INDUCTOR 10uH
L206	1-410-470-11	s	INDUCTOR 10uH
L207	1-410-470-11	s	INDUCTOR 10uH
L301	1-410-470-11	s	INDUCTOR 10uH
L302	1-410-470-11	s	INDUCTOR 10uH
L303	1-410-478-11	s	INDUCTOR 47uH
L401	1-410-470-11	s	INDUCTOR 10uH
L402	1-408-422-00	s	INDUCTOR 120uH
L403	1-410-470-11	s	INDUCTOR 10uH
L404	1-410-470-11	s	INDUCTOR 10uH
L501	1-410-470-11	s	INDUCTOR 10uH
L502	1-410-470-11	s	INDUCTOR 10uH
L503	1-410-470-11	s	INDUCTOR 10uH
L504	1-410-470-11	s	INDUCTOR 10uH
L505	1-410-470-11	s	INDUCTOR 10uH
L506	1-408-422-00	s	INDUCTOR 120uH
L507	1-410-470-11	s	INDUCTOR 10uH
L508	1-410-470-11	s	INDUCTOR 10uH
PS1	⚠1-532-637-00	s	LINK, IC 1.0A
PS2	⚠1-532-685-00	s	LINK, IC 0.6A
PS3	⚠1-532-637-00	s	LINK, IC 1.0A
Q1	8-729-120-28	s	TRANSISTOR 2SC1623-L5L6
Q2	8-729-112-65	s	TRANSISTOR 2SA1462-Y33
Q3	8-729-120-28	s	TRANSISTOR 2SC1623-L5L6
Q4	8-729-109-44	s	TRANSISTOR 2SK94
Q5	8-729-120-28	s	TRANSISTOR 2SC1623-L5L6
Q6	8-729-175-73	s	TRANSISTOR 2SC2757
Q7	8-729-112-65	s	TRANSISTOR 2SA1462-Y33
Q8	8-729-120-28	s	TRANSISTOR 2SC1623-L5L6
Q9	8-729-109-44	s	TRANSISTOR 2SK94
Q10	8-729-216-22	s	TRANSISTOR 2SA1162
Q11	8-729-216-22	s	TRANSISTOR 2SA1162
Q201	8-729-120-28	s	TRANSISTOR 2SC1623-L5L6
Q202	8-729-120-28	s	TRANSISTOR 2SC1623-L5L6
Q203	8-729-120-28	s	TRANSISTOR 2SC1623-L5L6
Q204	8-729-120-28	s	TRANSISTOR 2SC1623-L5L6
Q301	8-729-120-28	s	TRANSISTOR 2SC1623-L5L6
Q302	8-729-120-28	s	TRANSISTOR 2SC1623-L5L6
Q303	8-729-175-73	s	TRANSISTOR 2SC2757
Q304	8-729-120-28	s	TRANSISTOR 2SC1623-L5L6
Q305	8-729-120-28	s	TRANSISTOR 2SC1623-L5L6
Q306	8-729-120-28	s	TRANSISTOR 2SC1623-L5L6
Q307	8-729-216-22	s	TRANSISTOR 2SA1162
Q308	8-729-120-28	s	TRANSISTOR 2SC1623-L5L6
Q309	8-729-175-73	s	TRANSISTOR 2SC2757
Q311	8-729-216-22	s	TRANSISTOR 2SA1162

NOTE: Please see page 8-9 for the parts that are not listed in the parts list.

(DA-63P BOARD used for DFS-500P)

Ref. No. or Q'ty	Part No.	SP	Description
Q312	8-729-120-28	s	TRANSISTOR 2SC1623-L5L6
Q313	8-729-175-73	s	TRANSISTOR 2SC2757
Q315	8-729-216-22	s	TRANSISTOR 2SA1162
Q316	8-729-120-28	s	TRANSISTOR 2SC1623-L5L6
Q401	8-729-120-28	s	TRANSISTOR 2SC1623-L5L6
Q402	8-729-120-28	s	TRANSISTOR 2SC1623-L5L6
Q403	8-729-112-65	s	TRANSISTOR 2SA1462-Y33
Q404	8-729-120-28	s	TRANSISTOR 2SC1623-L5L6
Q405	8-729-112-65	s	TRANSISTOR 2SA1462-Y33
Q406	8-729-216-22	s	TRANSISTOR 2SA1162
Q407	8-729-216-22	s	TRANSISTOR 2SA1162
Q408	8-729-120-28	s	TRANSISTOR 2SC1623-L5L6
Q409	8-729-120-28	s	TRANSISTOR 2SC1623-L5L6
Q410	8-729-120-28	s	TRANSISTOR 2SC1623-L5L6
Q411	8-729-120-28	s	TRANSISTOR 2SC1623-L5L6
Q413	8-729-120-28	s	TRANSISTOR 2SC1623-L5L6
Q414	8-729-116-64	s	TRANSISTOR 2SK508-K51
Q415	8-729-112-65	s	TRANSISTOR 2SA1462-Y33
Q416	8-729-112-65	s	TRANSISTOR 2SA1462-Y33
Q417	8-729-112-65	s	TRANSISTOR 2SA1462-Y33
Q418	8-729-175-73	s	TRANSISTOR 2SC2757
Q419	8-729-175-73	s	TRANSISTOR 2SC2757
Q420	8-729-175-73	s	TRANSISTOR 2SC2757
Q421	8-729-175-73	s	TRANSISTOR 2SC2757
Q422	8-729-120-28	s	TRANSISTOR 2SC1623-L5L6
Q423	8-729-120-28	s	TRANSISTOR 2SC1623-L5L6
Q424	8-729-112-65	s	TRANSISTOR 2SA1462-Y33
Q425	8-729-216-22	s	TRANSISTOR 2SA1162
Q426	8-729-216-22	s	TRANSISTOR 2SA1162
Q427	8-729-120-28	s	TRANSISTOR 2SC1623-L5L6
Q428	8-729-120-28	s	TRANSISTOR 2SC1623-L5L6
Q501	8-729-120-28	s	TRANSISTOR 2SC1623-L5L6
Q502	8-729-120-28	s	TRANSISTOR 2SC1623-L5L6
Q503	8-729-216-22	s	TRANSISTOR 2SA1162
Q506	8-729-120-28	s	TRANSISTOR 2SC1623-L5L6
Q507	8-729-120-28	s	TRANSISTOR 2SC1623-L5L6
Q508	8-729-216-22	s	TRANSISTOR 2SA1162
Q512	8-729-216-22	s	TRANSISTOR 2SA1162
Q514	8-729-216-22	s	TRANSISTOR 2SA1162
Q515	8-729-120-28	s	TRANSISTOR 2SC1623-L5L6
Q516	8-729-116-64	s	TRANSISTOR 2SK508-K51
Q517	8-729-112-65	s	TRANSISTOR 2SA1462-Y33
Q518	8-729-175-73	s	TRANSISTOR 2SC2757
Q519	8-729-175-73	s	TRANSISTOR 2SC2757
Q520	8-729-112-65	s	TRANSISTOR 2SA1462-Y33
Q521	8-729-120-28	s	TRANSISTOR 2SC1623-L5L6
Q522	8-729-120-28	s	TRANSISTOR 2SC1623-L5L6
Q523	8-729-120-28	s	TRANSISTOR 2SC1623-L5L6
Q524	8-729-216-22	s	TRANSISTOR 2SA1162
Q525	8-729-216-22	s	TRANSISTOR 2SA1162
Q526	8-729-175-73	s	TRANSISTOR 2SC2757
Q527	8-729-175-73	s	TRANSISTOR 2SC2757
Q528	8-729-120-28	s	TRANSISTOR 2SC1623-L5L6
Q529	8-729-112-65	s	TRANSISTOR 2SA1462-Y33
Q530	8-729-120-28	s	TRANSISTOR 2SC1623-L5L6
Q531	8-729-120-28	s	TRANSISTOR 2SC1623-L5L6
Q532	8-729-216-22	s	TRANSISTOR 2SA1162
Q533	8-729-175-73	s	TRANSISTOR 2SC2757
Q534	8-729-175-73	s	TRANSISTOR 2SC2757

(DA-63P BOARD used for DFS-500P)

Ref. No. or Q'ty	Part No.	SP	Description
Q535	8-729-120-28	s	TRANSISTOR 2SC1623-L5L6
Q536	8-729-112-65	s	TRANSISTOR 2SA1462-Y33
Q537	8-729-216-22	s	TRANSISTOR 2SA1162
Q538	8-729-216-22	s	TRANSISTOR 2SA1162
Q540	8-729-120-28	s	TRANSISTOR 2SC1623-L5L6
Q541	8-729-116-64	s	TRANSISTOR 2SK508-K51
Q542	8-729-112-65	s	TRANSISTOR 2SA1462-Y33
Q545	8-729-175-73	s	TRANSISTOR 2SC2757
Q546	8-729-216-22	s	TRANSISTOR 2SA1162
Q548	8-729-116-64	s	TRANSISTOR 2SK508-K51
Q549	8-729-112-65	s	TRANSISTOR 2SA1462-Y33
Q551	8-729-216-22	s	TRANSISTOR 2SA1162
Q553	8-729-116-64	s	TRANSISTOR 2SK508-K51
Q554	8-729-112-65	s	TRANSISTOR 2SA1462-Y33
Q556	8-729-216-22	s	TRANSISTOR 2SA1162
Q557	8-729-175-73	s	TRANSISTOR 2SC2757
Q558	8-729-216-22	s	TRANSISTOR 2SA1162
Q560	8-729-116-64	s	TRANSISTOR 2SK508-K51
Q561	8-729-112-65	s	TRANSISTOR 2SA1462-Y33
Q563	8-729-216-22	s	TRANSISTOR 2SA1162
Q564	8-729-175-73	s	TRANSISTOR 2SC2757
Q565	8-729-216-22	s	TRANSISTOR 2SA1162
Q567	8-729-116-64	s	TRANSISTOR 2SK508-K51
Q568	8-729-112-65	s	TRANSISTOR 2SA1462-Y33
Q572	8-729-120-28	s	TRANSISTOR 2SC1623-L5L6
Q573	8-729-216-22	s	TRANSISTOR 2SA1162
Q574	8-729-120-28	s	TRANSISTOR 2SC1623-L5L6
Q577	8-729-175-73	s	TRANSISTOR 2SC2757
Q578	8-729-216-22	s	TRANSISTOR 2SA1162
R2	1-216-691-11	s	METAL, CHIP 47K 0.5% 1/10W
R7	1-216-615-11	s	METAL, CHIP 33 0.5% 1/10W
R8	1-218-776-11	s	METAL 1M 0.5% 1/10W
R10	1-216-683-11	s	METAL, CHIP 22K 0.5% 1/10W
R13	1-216-695-11	s	METAL, CHIP 68K 0.5% 1/10W
R14	1-216-623-11	s	METAL, CHIP 68 0.5% 1/10W
R23	1-216-691-11	s	METAL, CHIP 47K 0.5% 1/10W
R24	1-216-691-11	s	METAL, CHIP 47K 0.5% 1/10W
R26	1-216-649-11	s	METAL, CHIP 820 0.5% 1/10W
R27	1-216-649-11	s	METAL, CHIP 820 0.5% 1/10W
R28	1-216-642-11	s	METAL, CHIP 430 0.5% 1/10W
R31	1-216-663-11	s	METAL, CHIP 3.3K 0.5% 1/10W
R36	1-216-687-11	s	METAL, CHIP 33K 0.5% 1/10W
R38	1-216-623-11	s	METAL, CHIP 68 0.5% 1/10W
R39	1-216-663-11	s	METAL, CHIP 3.3K 0.5% 1/10W
R41	1-216-683-11	s	METAL, CHIP 22K 0.5% 1/10W
R44	1-216-679-11	s	METAL, CHIP 15K 0.5% 1/10W
R45	1-216-663-11	s	METAL, CHIP 3.3K 0.5% 1/10W
R48	1-216-683-11	s	METAL, CHIP 22K 0.5% 1/10W
R49	1-216-647-11	s	METAL, CHIP 680 0.5% 1/10W
R53	1-216-671-11	s	METAL, CHIP 6.8K 0.5% 1/10W
R208	1-216-647-11	s	METAL, CHIP 680 0.5% 1/10W
R209	1-216-655-11	s	METAL, CHIP 1.5K 0.5% 1/10W
R210	1-216-647-11	s	METAL, CHIP 680 0.5% 1/10W
R211	1-216-655-11	s	METAL, CHIP 1.5K 0.5% 1/10W
R302	1-216-669-11	s	METAL, CHIP 5.6K 0.5% 1/10W
R305	1-216-669-11	s	METAL, CHIP 5.6K 0.5% 1/10W
R309	1-216-641-11	s	METAL, CHIP 390 0.5% 1/10W
R310	1-216-641-11	s	METAL, CHIP 390 0.5% 1/10W
R312	1-216-669-11	s	METAL, CHIP 5.6K 0.5% 1/10W

NOTE: Please see page 8-9 for the parts that are not listed in the parts list.

(DA-63P BOARD used for DFS-500P)

Ref. No. or Q'ty	Part No.	SP	Description
R313	1-216-661-11	s	METAL, CHIP 2.7K 0.5% 1/10W
R315	1-216-669-11	s	METAL, CHIP 5.6K 0.5% 1/10W
R317	1-216-669-11	s	METAL, CHIP 5.6K 0.5% 1/10W
R319	1-216-669-11	s	METAL, CHIP 5.6K 0.5% 1/10W
R320	1-216-663-11	s	METAL, CHIP 3.3K 0.5% 1/10W
R328	1-216-655-11	s	METAL, CHIP 1.5K 0.5% 1/10W
R336	1-216-663-11	s	METAL, CHIP 3.3K 0.5% 1/10W
R339	1-216-655-11	s	METAL, CHIP 1.5K 0.5% 1/10W
R403	1-216-645-11	s	METAL, CHIP 560 0.5% 1/10W
R404	1-216-643-11	s	METAL, CHIP 470 0.5% 1/10W
R406	1-216-687-11	s	METAL, CHIP 33K 0.5% 1/10W
R407	1-216-687-11	s	METAL, CHIP 33K 0.5% 1/10W
R408	1-216-643-11	s	METAL, CHIP 470 0.5% 1/10W
R411	1-216-673-11	s	METAL, CHIP 8.2K 0.5% 1/10W
R412	1-216-687-11	s	METAL, CHIP 33K 0.5% 1/10W
R413	1-216-687-11	s	METAL, CHIP 33K 0.5% 1/10W
R414	1-216-643-11	s	METAL, CHIP 470 0.5% 1/10W
R418	1-216-657-11	s	METAL, CHIP 1.8K 0.5% 1/10W
R420	1-216-657-11	s	METAL, CHIP 1.8K 0.5% 1/10W
R424	1-216-657-11	s	METAL, CHIP 1.8K 0.5% 1/10W
R425	1-216-669-11	s	METAL, CHIP 5.6K 0.5% 1/10W
R426	1-216-669-11	s	METAL, CHIP 5.6K 0.5% 1/10W
R433	1-216-655-11	s	METAL, CHIP 1.5K 0.5% 1/10W
R434	1-216-655-11	s	METAL, CHIP 1.5K 0.5% 1/10W
R437	1-216-655-11	s	METAL, CHIP 1.5K 0.5% 1/10W
R444	1-216-687-11	s	METAL, CHIP 33K 0.5% 1/10W
R445	1-216-663-11	s	METAL, CHIP 3.3K 0.5% 1/10W
R446	1-216-663-11	s	METAL, CHIP 3.3K 0.5% 1/10W
R447	1-216-635-11	s	METAL, CHIP 220 0.5% 1/10W
R449	1-216-639-11	s	METAL, CHIP 330 0.5% 1/10W
R450	1-216-663-11	s	METAL, CHIP 3.3K 0.5% 1/10W
R451	1-216-639-11	s	METAL, CHIP 330 0.5% 1/10W
R454	1-216-647-11	s	METAL, CHIP 680 0.5% 1/10W
R455	1-216-637-11	s	METAL, CHIP 270 0.5% 1/10W
R457	1-216-663-11	s	METAL, CHIP 3.3K 0.5% 1/10W
R458	1-216-309-00	s	METAL, CHIP 5.6 5% 1/10W
R459	1-216-309-00	s	METAL, CHIP 5.6 5% 1/10W
R460	1-216-309-00	s	METAL, CHIP 5.6 5% 1/10W
R461	1-216-309-00	s	METAL, CHIP 5.6 5% 1/10W
R462	1-215-394-00	s	METAL 75 1% 1/6W
R463	1-215-394-00	s	METAL 75 1% 1/6W
R464	1-215-394-00	s	METAL 75 1% 1/6W
R465	1-215-394-00	s	METAL 75 1% 1/6W
R502	1-216-673-11	s	METAL, CHIP 8.2K 0.5% 1/10W
R503	1-216-691-11	s	METAL, CHIP 47K 0.5% 1/10W
R515	1-216-643-11	s	METAL, CHIP 470 0.5% 1/10W
R519	1-216-673-11	s	METAL, CHIP 8.2K 0.5% 1/10W
R520	1-216-691-11	s	METAL, CHIP 47K 0.5% 1/10W
R532	1-216-643-11	s	METAL, CHIP 470 0.5% 1/10W
R537	1-216-640-11	s	METAL, CHIP 360 0.5% 1/10W
R539	1-216-663-11	s	METAL, CHIP 3.3K 0.5% 1/10W
R547	1-216-671-11	s	METAL, CHIP 6.8K 0.5% 1/10W
R548	1-216-647-11	s	METAL, CHIP 680 0.5% 1/10W
R556	1-216-687-11	s	METAL, CHIP 33K 0.5% 1/10W
R557	1-216-663-11	s	METAL, CHIP 3.3K 0.5% 1/10W
R558	1-216-663-11	s	METAL, CHIP 3.3K 0.5% 1/10W
R559	1-216-661-11	s	METAL, CHIP 2.7K 0.5% 1/10W
R561	1-216-665-11	s	METAL, CHIP 3.9K 0.5% 1/10W
R563	1-216-653-11	s	METAL, CHIP 1.2K 0.5% 1/10W

(DA-63P BOARD used for DFS-500P)

Ref. No. or Q'ty	Part No.	SP	Description
R564	1-216-671-11	s	METAL, CHIP 6.8K 0.5% 1/10W
R571	1-216-647-11	s	METAL, CHIP 680 0.5% 1/10W
R573	1-216-647-11	s	METAL, CHIP 680 0.5% 1/10W
R574	1-216-663-11	s	METAL, CHIP 3.3K 0.5% 1/10W
R576	1-215-394-00	s	METAL 75 1% 1/6W
R577	1-215-394-00	s	METAL 75 1% 1/6W
R578	1-216-647-11	s	METAL, CHIP 680 0.5% 1/10W
R579	1-216-663-11	s	METAL, CHIP 3.3K 0.5% 1/10W
R581	1-216-663-11	s	METAL, CHIP 3.3K 0.5% 1/10W
R583	1-215-394-00	s	METAL 75 1% 1/6W
R584	1-215-394-00	s	METAL 75 1% 1/6W
R585	1-216-649-11	s	METAL, CHIP 820 0.5% 1/10W
R588	1-216-663-11	s	METAL, CHIP 3.3K 0.5% 1/10W
R590	1-215-394-00	s	METAL 75 1% 1/6W
R591	1-215-394-00	s	METAL 75 1% 1/6W
R593	1-216-673-11	s	METAL, CHIP 8.2K 0.5% 1/10W
R594	1-216-691-11	s	METAL, CHIP 47K 0.5% 1/10W
R601	1-216-643-11	s	METAL, CHIP 470 0.5% 1/10W
R605	1-216-669-11	s	METAL, CHIP 5.6K 0.5% 1/10W
R606	1-216-657-11	s	METAL, CHIP 1.8K 0.5% 1/10W
R611	1-216-663-11	s	METAL, CHIP 3.3K 0.5% 1/10W
R616	1-216-687-11	s	METAL, CHIP 33K 0.5% 1/10W
R617	1-216-687-11	s	METAL, CHIP 33K 0.5% 1/10W
R618	1-216-643-11	s	METAL, CHIP 470 0.5% 1/10W
R621	1-216-673-11	s	METAL, CHIP 8.2K 0.5% 1/10W
R622	1-216-691-11	s	METAL, CHIP 47K 0.5% 1/10W
R628	1-216-643-11	s	METAL, CHIP 470 0.5% 1/10W
R634	1-216-677-11	s	METAL, CHIP 12K 0.5% 1/10W
R635	1-216-663-11	s	METAL, CHIP 3.3K 0.5% 1/10W
R640	1-216-687-11	s	METAL, CHIP 33K 0.5% 1/10W
R641	1-216-687-11	s	METAL, CHIP 33K 0.5% 1/10W
R642	1-216-643-11	s	METAL, CHIP 470 0.5% 1/10W
R646	1-216-657-11	s	METAL, CHIP 1.8K 0.5% 1/10W
R648	1-216-657-11	s	METAL, CHIP 1.8K 0.5% 1/10W
R650	1-216-669-11	s	METAL, CHIP 5.6K 0.5% 1/10W
R661	1-216-687-11	s	METAL, CHIP 33K 0.5% 1/10W
R662	1-216-663-11	s	METAL, CHIP 3.3K 0.5% 1/10W
R663	1-216-663-11	s	METAL, CHIP 3.3K 0.5% 1/10W
R672	1-216-655-11	s	METAL, CHIP 1.5K 0.5% 1/10W
R684	1-216-687-11	s	METAL, CHIP 33K 0.5% 1/10W
R685	1-216-663-11	s	METAL, CHIP 3.3K 0.5% 1/10W
R686	1-216-663-11	s	METAL, CHIP 3.3K 0.5% 1/10W
R688	1-216-647-11	s	METAL, CHIP 680 0.5% 1/10W
R692	1-215-394-00	s	METAL 75 1% 1/6W
R699	1-216-649-11	s	METAL, CHIP 820 0.5% 1/10W
R710	1-216-687-11	s	METAL, CHIP 33K 0.5% 1/10W
R711	1-216-663-11	s	METAL, CHIP 3.3K 0.5% 1/10W
R712	1-216-663-11	s	METAL, CHIP 3.3K 0.5% 1/10W
R714	1-216-647-11	s	METAL, CHIP 680 0.5% 1/10W
R718	1-215-394-00	s	METAL 75 1% 1/6W
R721	1-216-640-11	s	METAL, CHIP 360 0.5% 1/10W
R727	1-216-655-11	s	METAL, CHIP 1.5K 0.5% 1/10W
R730	1-216-643-11	s	METAL, CHIP 470 0.5% 1/10W
R732	1-216-663-11	s	METAL, CHIP 3.3K 0.5% 1/10W
R739	1-216-687-11	s	METAL, CHIP 33K 0.5% 1/10W
R740	1-216-663-11	s	METAL, CHIP 3.3K 0.5% 1/10W
R741	1-216-663-11	s	METAL, CHIP 3.3K 0.5% 1/10W
R743	1-216-647-11	s	METAL, CHIP 680 0.5% 1/10W
R747	1-215-394-00	s	METAL 75 1% 1/6W

NOTE: Please see page 8-9 for the parts that are not listed in the parts list.

(DA-63P BOARD used for DFS-500P)

Ref. No. or Q'ty	Part No.	SP	Description
R750	1-216-640-11	s	METAL, CHIP 360 0.5% 1/10W
R756	1-216-655-11	s	METAL, CHIP 1.5K 0.5% 1/10W
R759	1-216-643-11	s	METAL, CHIP 470 0.5% 1/10W
R761	1-216-663-11	s	METAL, CHIP 3.3K 0.5% 1/10W
R768	1-216-687-11	s	METAL, CHIP 33K 0.5% 1/10W
R769	1-216-663-11	s	METAL, CHIP 3.3K 0.5% 1/10W
R770	1-216-663-11	s	METAL, CHIP 3.3K 0.5% 1/10W
R772	1-216-647-11	s	METAL, CHIP 680 0.5% 1/10W
R776	1-215-394-00	s	METAL 75 1% 1/6W
R778	1-216-640-11	s	METAL, CHIP 360 0.5% 1/10W
R779	1-216-640-11	s	METAL, CHIP 360 0.5% 1/10W
R780	1-215-394-00	s	METAL 75 1% 1/6W
R781	1-215-394-00	s	METAL 75 1% 1/6W
R782	1-215-394-00	s	METAL 75 1% 1/6W
R797	1-216-643-11	s	METAL, CHIP 470 0.5% 1/10W
R798	1-216-669-11	s	METAL, CHIP 5.6K 0.5% 1/10W
R799	1-216-669-11	s	METAL, CHIP 5.6K 0.5% 1/10W
R808	1-216-655-11	s	METAL, CHIP 1.5K 0.5% 1/10W
R811	1-216-643-11	s	METAL, CHIP 470 0.5% 1/10W
RB101	1-231-411-00	s	RESISTOR BLOCK 100Kx8
RB102	1-231-411-00	s	RESISTOR BLOCK 100Kx8
RB103	1-231-411-00	s	RESISTOR BLOCK 100Kx8
RB104	1-231-411-00	s	RESISTOR BLOCK 100Kx8
RB105	1-231-411-00	s	RESISTOR BLOCK 100Kx8
RB106	1-231-411-00	s	RESISTOR BLOCK 100Kx8
RB107	1-231-411-00	s	RESISTOR BLOCK 100Kx8
RB108	1-231-411-00	s	RESISTOR BLOCK 100Kx8
RB109	1-231-411-00	s	RESISTOR BLOCK 100Kx8
RB110	1-231-411-00	s	RESISTOR BLOCK 100Kx8
RB111	1-231-411-00	s	RESISTOR BLOCK 100Kx8
RB112	1-231-411-00	s	RESISTOR BLOCK 100Kx8
RB113	1-231-411-00	s	RESISTOR BLOCK 100Kx8
RB114	1-231-411-00	s	RESISTOR BLOCK 100Kx8
RB115	1-231-411-00	s	RESISTOR BLOCK 100Kx8
RB202	1-231-385-00	s	RESISTOR BLOCK 4.7Kx8
RB203	1-231-385-00	s	RESISTOR BLOCK 4.7Kx8
RB204	1-231-385-00	s	RESISTOR BLOCK 4.7Kx8
RB205	1-231-385-00	s	RESISTOR BLOCK 4.7Kx8
RV1	1-228-993-00	s	RES, ADJ METAL 4.7K
RV2	1-237-503-21	s	RES, ADJ METAL 10K
RV3	1-237-502-21	s	RES, ADJ METAL 5K
RV4	1-228-995-00	s	RES, ADJ METAL 22K
RV5	1-228-995-00	s	RES, ADJ METAL 22K
RV6	1-228-995-00	s	RES, ADJ METAL 22K
RV7	1-228-995-00	s	RES, ADJ METAL 22K
RV8	1-228-995-00	s	RES, ADJ METAL 22K
RV9	1-228-994-00	s	RES, ADJ METAL 10K
RV10	1-228-994-00	s	RES, ADJ METAL 10K
RV11	1-237-501-21	s	RES, ADJ METAL 2K
RV301	1-228-989-00	s	RES, ADJ METAL 470
RV401	1-228-990-00	s	RES, ADJ METAL 1K
RV402	1-228-993-00	s	RES, ADJ METAL 4.7K
RV403	1-228-993-00	s	RES, ADJ METAL 4.7K
RV404	1-237-500-21	s	RES, ADJ METAL 1K
RV406	1-228-990-00	s	RES, ADJ METAL 1K
RV504	1-228-993-00	s	RES, ADJ METAL 4.7K
RV506	1-228-991-00	s	RES, ADJ METAL 2.2K
RV507	1-237-500-21	s	RES, ADJ METAL 1K

(DA-63P BOARD used for DFS-500P)

Ref. No. or Q'ty	Part No.	SP	Description
RV508	1-237-500-21	s	RES, ADJ METAL 1K
RV509	1-237-500-21	s	RES, ADJ METAL 1K
RV511	1-228-993-00	s	RES, ADJ METAL 4.7K
RV512	1-228-991-00	s	RES, ADJ METAL 2.2K
RV513	1-228-993-00	s	RES, ADJ METAL 4.7K
RV514	1-228-993-00	s	RES, ADJ METAL 4.7K
RV515	1-228-989-00	s	RES, ADJ METAL 470
RV516	1-237-501-21	s	RES, ADJ METAL 2K
RV518	1-228-990-00	s	RES, ADJ METAL 1K
RV520	1-237-501-21	s	RES, ADJ METAL 2K
RV521	1-228-989-00	s	RES, ADJ METAL 470
RV522	1-237-501-21	s	RES, ADJ METAL 2K
RV523	1-228-989-00	s	RES, ADJ METAL 470
RV524	1-237-501-21	s	RES, ADJ METAL 2K
RV525	1-228-990-00	s	RES, ADJ METAL 1K
RV526	1-228-989-00	s	RES, ADJ METAL 470
S1	1-570-373-12	s	SWITCH, SLIDE
S2	1-554-399-00	s	SWITCH, TOGGLE
S3	1-553-252-00	s	SWITCH, DIGITAL
S101	1-554-027-00	s	SWITCH, DIGITAL
S102	1-570-514-11	s	SWITCH, SLIDE
S103	1-554-027-00	s	SWITCH, DIGITAL
TH1	1-800-071-11	s	THERMISTER, S-300
VCO1	1-577-295-11	s	VCO, CRYSTAL 17.734475MHz
VCO2	1-577-294-11	s	VCO, CRYSTAL 14.187500MHz

NOTE: Please see page 8-9 for the parts that are not listed in the parts list.

FM-29/FM-29P BOARD

Ref. No. or Q'ty	Part No.	SP	Description
1pc	A-8271-684-A	o	MOUNTED CIRCUIT BAORD, FM-29 (for DFS-500)
1pc	A-8271-693-A	o	MOUNTED CIRCUIT BOARD, FM-29P (for DFS-500P)
2pcs	3-166-184-01	o	LEVER, PC BOARD
2pcs	3-166-185-01	s	NUT, PLATE
1pc	3-178-157-01	o	PLATE, SHIELD
8pcs	4-886-821-11	s	SCREW, S TIGHT, +PTTWH 3X6
2pcs	7-622-207-05	s	N 2.6, TYPE 2
2pcs	7-626-320-11	s	PIN, SPRING 3X8
6pcs	7-628-254-40	s	SCREW +PS 2.6X12
C1	1-161-055-00	s	CERAMIC 0.022uF 10% 50V
C2	1-161-055-00	s	CERAMIC 0.022uF 10% 50V
C3	1-161-055-00	s	CERAMIC 0.022uF 10% 50V
C4	1-161-055-00	s	CERAMIC 0.022uF 10% 50V
C5	1-161-055-00	s	CERAMIC 0.022uF 10% 50V
C6	1-161-055-00	s	CERAMIC 0.022uF 10% 50V
C7	1-161-055-00	s	CERAMIC 0.022uF 10% 50V
C8	1-161-055-00	s	CERAMIC 0.022uF 10% 50V
C9	1-161-055-00	s	CERAMIC 0.022uF 10% 50V
C10	1-161-055-00	s	CERAMIC 0.022uF 10% 50V
C11	1-161-055-00	s	CERAMIC 0.022uF 10% 50V
C12	1-161-055-00	s	CERAMIC 0.022uF 10% 50V
C13	1-161-055-00	s	CERAMIC 0.022uF 10% 50V
C14	1-161-055-00	s	CERAMIC 0.022uF 10% 50V
C15	1-161-055-00	s	CERAMIC 0.022uF 10% 50V
C16	1-161-055-00	s	CERAMIC 0.022uF 10% 50V
C17	1-161-772-11	s	CERAMIC 0.1uF 10% 25V
C18	1-161-772-11	s	CERAMIC 0.1uF 10% 25V
C19	1-161-772-11	s	CERAMIC 0.1uF 10% 25V
C20	1-161-772-11	s	CERAMIC 0.1uF 10% 25V
C21	1-161-772-11	s	CERAMIC 0.1uF 10% 25V
C22	1-161-772-11	s	CERAMIC 0.1uF 10% 25V
C23	1-161-055-00	s	CERAMIC 0.022uF 10% 50V
C24	1-161-055-00	s	CERAMIC 0.022uF 10% 50V
C25	1-161-055-00	s	CERAMIC 0.022uF 10% 50V
C26	1-161-055-00	s	CERAMIC 0.022uF 10% 50V
C27	1-161-055-00	s	CERAMIC 0.022uF 10% 50V
C28	1-161-055-00	s	CERAMIC 0.022uF 10% 50V
C29	1-161-055-00	s	CERAMIC 0.022uF 10% 50V
C30	1-161-055-00	s	CERAMIC 0.022uF 10% 50V
C31	1-161-055-00	s	CERAMIC 0.022uF 10% 50V
C32	1-161-055-00	s	CERAMIC 0.022uF 10% 50V
C33	1-161-055-00	s	CERAMIC 0.022uF 10% 50V
C34	1-161-055-00	s	CERAMIC 0.022uF 10% 50V
C35	1-161-055-00	s	CERAMIC 0.022uF 10% 50V
C36	1-161-055-00	s	CERAMIC 0.022uF 10% 50V
C37	1-161-055-00	s	CERAMIC 0.022uF 10% 50V
C38	1-161-055-00	s	CERAMIC 0.022uF 10% 50V
C39	1-161-772-11	s	CERAMIC 0.1uF 10% 25V
C40	1-161-772-11	s	CERAMIC 0.1uF 10% 25V
C41	1-161-772-11	s	CERAMIC 0.1uF 10% 25V
C42	1-161-772-11	s	CERAMIC 0.1uF 10% 25V
C43	1-161-772-11	s	CERAMIC 0.1uF 10% 25V
C44	1-161-772-11	s	CERAMIC 0.1uF 10% 25V
C45	1-161-055-00	s	CERAMIC 0.022uF 10% 50V
C46	1-161-055-00	s	CERAMIC 0.022uF 10% 50V
C47	1-161-055-00	s	CERAMIC 0.022uF 10% 50V

(FM-29/FM-29P BOARD)

Ref. No. or Q'ty	Part No.	SP	Description
C48	1-161-055-00	s	CERAMIC 0.022uF 10% 50V
C49	1-161-055-00	s	CERAMIC 0.022uF 10% 50V
C50	1-161-055-00	s	CERAMIC 0.022uF 10% 50V
C51	1-161-055-00	s	CERAMIC 0.022uF 10% 50V
C52	1-161-055-00	s	CERAMIC 0.022uF 10% 50V
C53	1-161-055-00	s	CERAMIC 0.022uF 10% 50V
C54	1-161-055-00	s	CERAMIC 0.022uF 10% 50V
C55	1-161-055-00	s	CERAMIC 0.022uF 10% 50V
C56	1-161-055-00	s	CERAMIC 0.022uF 10% 50V
C57	1-161-055-00	s	CERAMIC 0.022uF 10% 50V
C58	1-161-055-00	s	CERAMIC 0.022uF 10% 50V
C59	1-161-055-00	s	CERAMIC 0.022uF 10% 50V
C60	1-161-055-00	s	CERAMIC 0.022uF 10% 50V
C61	1-161-055-00	s	CERAMIC 0.022uF 10% 50V
C62	1-161-055-00	s	CERAMIC 0.022uF 10% 50V
C63	1-161-055-00	s	CERAMIC 0.022uF 10% 50V
C64	1-161-055-00	s	CERAMIC 0.022uF 10% 50V
C65	1-161-055-00	s	CERAMIC 0.022uF 10% 50V
C66	1-161-055-00	s	CERAMIC 0.022uF 10% 50V
C67	1-161-055-00	s	CERAMIC 0.022uF 10% 50V
C68	1-161-055-00	s	CERAMIC 0.022uF 10% 50V
C69	1-161-055-00	s	CERAMIC 0.022uF 10% 50V
C70	1-161-055-00	s	CERAMIC 0.022uF 10% 50V
C71	1-161-055-00	s	CERAMIC 0.022uF 10% 50V
C72	1-161-055-00	s	CERAMIC 0.022uF 10% 50V
C73	1-161-055-00	s	CERAMIC 0.022uF 10% 50V
C74	1-161-055-00	s	CERAMIC 0.022uF 10% 50V
C75	1-161-055-00	s	CERAMIC 0.022uF 10% 50V
C76	1-161-055-00	s	CERAMIC 0.022uF 10% 50V
C77	1-161-055-00	s	CERAMIC 0.022uF 10% 50V
C78	1-161-055-00	s	CERAMIC 0.022uF 10% 50V
C79	1-161-055-00	s	CERAMIC 0.022uF 10% 50V
C80	1-161-772-11	s	CERAMIC 0.1uF 10% 25V
C81	1-161-772-11	s	CERAMIC 0.1uF 10% 25V
C82	1-161-055-00	s	CERAMIC 0.022uF 10% 50V
C83	1-161-055-00	s	CERAMIC 0.022uF 10% 50V
C84	1-161-055-00	s	CERAMIC 0.022uF 10% 50V
C85	1-161-772-11	s	CERAMIC 0.1uF 10% 25V
C86	1-161-055-00	s	CERAMIC 0.022uF 10% 50V
C87	1-161-055-00	s	CERAMIC 0.022uF 10% 50V
C88	1-161-055-00	s	CERAMIC 0.022uF 10% 50V
C89	1-161-055-00	s	CERAMIC 0.022uF 10% 50V
C90	1-161-772-11	s	CERAMIC 0.1uF 10% 25V
C91	1-161-055-00	s	CERAMIC 0.022uF 10% 50V
C92	1-161-772-11	s	CERAMIC 0.1uF 10% 25V
C93	1-161-055-00	s	CERAMIC 0.022uF 10% 50V
C94	1-161-055-00	s	CERAMIC 0.022uF 10% 50V
C95	1-161-055-00	s	CERAMIC 0.022uF 10% 50V
C96	1-161-055-00	s	CERAMIC 0.022uF 10% 50V
C97	1-161-055-00	s	CERAMIC 0.022uF 10% 50V
C98	1-161-772-11	s	CERAMIC 0.1uF 10% 25V
C99	1-161-772-11	s	CERAMIC 0.1uF 10% 25V
C100	1-161-055-00	s	CERAMIC 0.022uF 10% 50V
C101	1-161-772-11	s	CERAMIC 0.1uF 10% 25V
C102	1-161-055-00	s	CERAMIC 0.022uF 10% 50V
C103	1-161-055-00	s	CERAMIC 0.022uF 10% 50V
C104	1-161-055-00	s	CERAMIC 0.022uF 10% 50V
C105	1-161-055-00	s	CERAMIC 0.022uF 10% 50V
C106	1-161-055-00	s	CERAMIC 0.022uF 10% 50V

NOTE: Please see page 8-9 for the parts that are not listed in the parts list.

(FM-29/FM-29P BOARD)

Ref. No. or Q'ty	Part No.	SP	Description
C107	1-161-055-00	s	CERAMIC 0.022uF 10% 50V
C108	1-161-055-00	s	CERAMIC 0.022uF 10% 50V
C109	1-161-772-11	s	CERAMIC 0.1uF 10% 25V
C110	1-161-772-11	s	CERAMIC 0.1uF 10% 25V
C111	1-161-772-11	s	CERAMIC 0.1uF 10% 25V
C112	1-161-772-11	s	CERAMIC 0.1uF 10% 25V
C113	1-161-772-11	s	CERAMIC 0.1uF 10% 25V
C114	1-161-055-00	s	CERAMIC 0.022uF 10% 50V
C115	1-161-055-00	s	CERAMIC 0.022uF 10% 50V
C116	1-161-055-00	s	CERAMIC 0.022uF 10% 50V
C117	1-161-055-00	s	CERAMIC 0.022uF 10% 50V
C118	1-161-055-00	s	CERAMIC 0.022uF 10% 50V
C119	1-161-055-00	s	CERAMIC 0.022uF 10% 50V
C120	1-161-055-00	s	CERAMIC 0.022uF 10% 50V
C121	1-161-772-11	s	CERAMIC 0.1uF 10% 25V
C122	1-124-584-00	s	ELECT 100uF 20% 10V
C123	1-124-584-00	s	ELECT 100uF 20% 10V
C124	1-161-772-11	s	CERAMIC 0.1uF 10% 25V
C125	1-124-584-00	s	ELECT 100uF 20% 10V
C126	1-124-584-00	s	ELECT 100uF 20% 10V
C127	1-124-584-00	s	ELECT 100uF 20% 10V
C128	1-124-584-00	s	ELECT 100uF 20% 10V
C129	1-124-584-00	s	ELECT 100uF 20% 10V
C130	1-161-055-00	s	CERAMIC 0.022uF 10% 50V
C131	1-161-055-00	s	CERAMIC 0.022uF 10% 50V
C201	1-161-055-00	s	CERAMIC 0.022uF 10% 50V
C202	1-161-055-00	s	CERAMIC 0.022uF 10% 50V
C203	1-161-055-00	s	CERAMIC 0.022uF 10% 50V
C204	1-161-055-00	s	CERAMIC 0.022uF 10% 50V
C205	1-161-055-00	s	CERAMIC 0.022uF 10% 50V
C206	1-161-055-00	s	CERAMIC 0.022uF 10% 50V
CN13	1-506-748-11	o	CONNECTOR, DIN 96P, MALE
CN14	1-506-748-11	o	CONNECTOR, DIN 96P, MALE
CN15	1-506-748-11	o	CONNECTOR, DIN 96P, MALE
CNI107	1-540-080-11	s	SOCKET, IC (IC113) 68P
IC1	8-759-989-55	s	IC SN74ALS244BN
IC2	8-759-900-69	s	IC SN74ALS74AN
IC3	8-759-945-78	s	IC SN74ALS11AN
IC4	8-759-904-18	s	IC SN74ALS00AN
IC5	8-759-936-54	s	IC SN74ALS175N
IC6	8-759-515-08	s	IC SN74ALS374AN
IC7	8-759-904-18	s	IC SN74ALS00AN
IC8	8-752-304-30	s	IC CX23043
IC9	8-759-912-05	s	IC SN74ALS161BN
IC10	8-759-515-08	s	IC SN74ALS374AN
IC11	8-759-903-74	s	IC SN74LS374N
IC12	8-759-916-01	s	IC SN74ALS153N
IC13	8-759-901-94	s	IC SN74LS194AN
IC14	8-759-901-94	s	IC SN74LS194AN
IC15	8-759-901-94	s	IC SN74LS194AN
IC16	8-759-901-94	s	IC SN74LS194AN
IC17	8-752-340-75	s	IC CXK1206AM
IC18	8-752-340-75	s	IC CXK1206AM
IC19	8-752-340-75	s	IC CXK1206AM
IC20	8-752-340-75	s	IC CXK1206AM
IC21	8-752-340-75	s	IC CXK1206AM
IC22	8-752-340-75	s	IC CXK1206AM

(FM-29/FM-29P BOARD)

Ref. No. or Q'ty	Part No.	SP	Description
IC23	8-759-989-55	s	IC SN74ALS244BN
IC24	8-759-900-69	s	IC SN74ALS74AN
IC25	8-759-945-78	s	IC SN74ALS11AN
IC26	8-759-904-18	s	IC SN74ALS00AN
IC27	8-759-936-54	s	IC SN74ALS175N
IC28	8-759-515-08	s	IC SN74ALS374AN
IC29	8-759-904-18	s	IC SN74ALS00AN
IC30	8-752-304-30	s	IC CX23043
IC31	8-759-912-05	s	IC SN74ALS161BN
IC32	8-759-515-08	s	IC SN74ALS374AN
IC33	8-759-903-74	s	IC SN74LS374N
IC34	8-759-916-01	s	IC SN74ALS153N
IC35	8-759-901-94	s	IC SN74LS194AN
IC36	8-759-901-94	s	IC SN74LS194AN
IC37	8-759-901-94	s	IC SN74LS194AN
IC38	8-759-901-94	s	IC SN74LS194AN
IC39	8-752-340-75	s	IC CXK1206AM
IC40	8-752-340-75	s	IC CXK1206AM
IC41	8-752-340-75	s	IC CXK1206AM
IC42	8-752-340-75	s	IC CXK1206AM
IC43	8-752-340-75	s	IC CXK1206AM
IC44	8-752-340-75	s	IC CXK1206AM
IC45	8-759-989-55	s	IC SN74ALS244BN
IC46	8-759-989-55	s	IC SN74ALS244BN
IC47	8-759-989-55	s	IC SN74ALS244BN
IC48	8-759-989-55	s	IC SN74ALS244BN
IC49	8-759-989-55	s	IC SN74ALS244BN
IC50	8-759-912-03	s	IC SN74ALS138N
IC51	8-759-912-03	s	IC SN74ALS138N
IC52	8-759-983-24	s	IC CXD8033Q
IC53	8-759-936-54	s	IC SN74ALS175N
IC54	8-759-936-54	s	IC SN74ALS175N
IC55	8-759-946-64	s	IC SN74ALS04BN
IC56	8-759-904-18	s	IC SN74ALS00AN
IC57	8-759-055-72	s	IC SN74ALS21AN
IC58	8-759-925-08	s	IC SN74ALS174N
IC59	8-759-912-05	s	IC SN74ALS161BN
IC60	8-759-515-08	s	IC SN74ALS374AN
IC61	8-759-916-01	s	IC SN74ALS153N
IC62	8-759-916-01	s	IC SN74ALS153N
IC63	8-759-946-64	s	IC SN74ALS04BN
IC64	8-759-904-38	s	IC SN74ALS32N
IC65	8-759-904-38	s	IC SN74ALS32N
IC66	8-759-904-38	s	IC SN74ALS32N
IC67	8-759-515-08	s	IC SN74ALS374AN
IC68	8-759-515-08	s	IC SN74ALS374AN
IC69	8-759-925-08	s	IC SN74ALS174N
IC70	8-759-515-08	s	IC SN74ALS374AN
IC71	8-759-925-08	s	IC SN74ALS174N
IC72	8-759-925-08	s	IC SN74ALS174N
IC73	8-759-912-03	s	IC SN74ALS138N
IC74	8-759-912-03	s	IC SN74ALS138N
IC75	8-759-989-55	s	IC SN74ALS244BN
IC76	8-759-989-55	s	IC SN74ALS244BN
IC77	8-759-063-42	s	IC CXD8264Q
IC78	8-759-989-55	s	IC SN74ALS244BN
IC79	8-759-989-55	s	IC SN74ALS244BN
IC80	8-752-322-06	s	IC CXK5814P-35
IC81	8-752-322-06	s	IC CXK5814P-35

NOTE: Please see page 8-9 for the parts that are not listed in the parts list.

(FM-29/FM-29P BOARD)

Ref. No. or Q'ty	Part No.	SP	Description
IC82	8-759-500-72	s	IC SN74ALS157AN
IC83	8-759-500-72	s	IC SN74ALS157AN
IC84	8-759-989-55	s	IC SN74ALS244BN
IC85	8-752-322-06	s	IC CXK5814P-35
IC86	8-759-515-08	s	IC SN74ALS374AN
IC87	8-759-515-08	s	IC SN74ALS374AN
IC88	8-759-515-08	s	IC SN74ALS374AN
IC89	8-759-989-55	s	IC SN74ALS244BN
IC90	8-752-322-06	s	IC CXK5814P-35
IC91	8-759-989-55	s	IC SN74ALS244BN
IC92	8-752-322-06	s	IC CXK5814P-35
IC93	8-759-901-94	s	IC SN74LS194AN
IC94	8-759-901-94	s	IC SN74LS194AN
IC95	8-759-901-94	s	IC SN74LS194AN
IC96	8-759-901-94	s	IC SN74LS194AN
IC97	8-759-989-55	s	IC SN74ALS244BN
IC98	8-752-340-75	s	IC CXK1206AM
IC99	8-752-340-75	s	IC CXK1206AM
IC100	8-759-515-08	s	IC SN74ALS374AN
IC101	8-752-340-75	s	IC CXK1206AM
IC102	8-759-925-08	s	IC SN74ALS174N
IC103	8-759-925-08	s	IC SN74ALS174N
IC104	8-759-990-59	s	IC N74F377N
IC105	8-759-990-59	s	IC N74F377N
IC106	8-759-904-26	s	IC SN74ALS08N
IC107	8-759-999-42	s	IC CXD8070K
IC108	8-759-063-38	s	IC CXD8276Q
IC109	8-752-340-57	s	IC CXK1203Q
IC110	8-752-340-57	s	IC CXK1203Q
IC111	8-752-340-57	s	IC CXK1203Q
IC112	8-752-340-57	s	IC CXK1203Q
IC113	8-752-340-57	s	IC CXK1203Q
IC114	8-759-063-43	s	IC CXD8263Q
IC115	8-759-063-38	s	IC CXD8276Q
IC116	8-759-515-08	s	IC SN74ALS374AN
IC117	8-759-925-08	s	IC SN74ALS174N
IC118	8-759-515-08	s	IC SN74ALS374AN
IC119	8-759-990-59	s	IC N74F377N
IC120	8-759-990-59	s	IC N74F377N
IC121	8-752-340-57	s	IC CXK1203Q
IC122	8-759-515-08	s	IC SN74ALS374AN
IC123	8-759-515-08	s	IC SN74ALS374AN
IC201	8-759-912-03	s	IC SN74ALS138N
IC202	8-759-901-64	s	IC SN74LS164N
IC203	8-759-936-53	s	IC SN74ALS151N
IC204	8-759-900-69	s	IC SN74ALS74AN
IC205	8-759-900-69	s	IC SN74ALS74AN
IC206	8-759-925-08	s	IC SN74ALS174N
L1	1-412-525-31	s	INDUCTOR 10uH
PS1	⚠1-532-984-11	s	LINK, IC 2A
RB1	1-231-410-00	s	RESISTOR BLOCK 10Kx8
RB2	1-231-410-00	s	RESISTOR BLOCK 10Kx8
RB3	1-231-533-00	s	RESISTOR BLOCK 10Kx4
S1	1-553-925-00	s	SWITCH, DIGITAL
S2	1-553-925-00	s	SWITCH, DIGITAL
S3	1-554-027-00	s	SWITCH, DIGITAL
S4	1-554-027-00	s	SWITCH, DIGITAL

NOTE: Please see page 8-9 for the parts that are not listed in the parts list.

(FM-29/FM-29P BOARD)

Ref. No. or Q'ty	Part No.	SP	Description
S5	1-554-027-00	s	SWITCH, DIGITAL

KY-223 BOARD

Ref. No. or Q'ty	Part No.	SP	Description
1pc	A-8271-686-A	o	MOUNTED CIRCUIT BOARD, KY-223
1pc	2-139-131-01	o	HEAT SINK, CON.
6pcs	2-140-311-04	s	KEY TOP
1pc	3-177-559-01	o	CHIP (A), SW
4pcs	3-178-140-01	o	SPACER
2pcs	3-708-563-01	o	CAP
21pcs	4-928-315-01	s	KEY TOP
1pc	7-682-950-01	s	SCREW +PSW 3X12
BZ1	1-529-025-00	s	BUZZER
C1	1-126-948-11	s	ELECT 100uF 20% 35V
C3	1-126-948-11	s	ELECT 100uF 20% 35V
C5	1-126-948-11	s	ELECT 100uF 20% 35V
C7	1-126-948-11	s	ELECT 100uF 20% 35V
C10	1-124-589-11	s	ELECT 47uF 20% 16V
C61	1-124-589-11	s	ELECT 47uF 20% 16V
C71	1-124-589-11	s	ELECT 47uF 20% 16V
C123	1-124-257-00	s	ELECT 2.2uF 20% 50V
C124	1-163-145-00	s	CERAMIC, CHIP 0.0015uF 5% 50V
C127	1-124-589-11	s	ELECT 47uF 20% 16V
C129	1-124-589-11	s	ELECT 47uF 20% 16V
CN1	1-506-699-11	o	CONNECTOR, LCSC 26P, MALE
CN2	1-506-480-11	s	CONNECTOR, 15P, MALE
CN3	1-506-480-11	s	CONNECTOR, 15P, MALE
CN4	1-506-480-11	s	CONNECTOR, 15P, MALE
CN5	1-506-469-11	s	CONNECTOR 4P, MALE
CN6	1-506-469-11	s	CONNECTOR 4P, MALE
CN7	1-506-475-11	s	CONNECTOR, 10P, MALE
CN8	1-506-475-11	s	CONNECTOR, 10P, MALE
CN9	1-506-469-11	s	CONNECTOR 4P, MALE
CNI14	1-526-659-00	o	SOCKET, IC 28P
D38	8-719-979-87	s	LED LD-701MG, GRN
D39	8-719-979-87	s	LED LD-701MG, GRN
D40	8-719-979-87	s	LED LD-701MG, GRN
D46	8-719-979-87	s	LED LD-701MG, GRN
D47	8-719-979-87	s	LED LD-701MG, GRN
D48	8-719-979-87	s	LED LD-701MG, GRN
D50	8-719-979-87	s	LED LD-701MG, GRN
D51	8-719-979-87	s	LED LD-701MG, GRN
D52	8-719-979-87	s	LED LD-701MG, GRN
D53	8-719-979-87	s	LED LD-701MG, GRN
D54	8-719-979-87	s	LED LD-701MG, GRN
D55	8-719-979-87	s	LED LD-701MG, GRN
D56	8-719-979-87	s	LED LD-701MG, GRN
D57	8-719-979-87	s	LED LD-701MG, GRN
D58	8-719-979-87	s	LED LD-701MG, GRN
D59	8-719-979-87	s	LED LD-701MG, GRN
D60	8-719-979-87	s	LED LD-701MG, GRN
D61	8-719-979-87	s	LED LD-701MG, GRN
D62	8-719-979-87	s	LED LD-701MG, GRN
D67	8-719-979-87	s	LED LD-701MG, GRN
D68	8-719-979-87	s	LED LD-701MG, GRN
D69	8-719-979-87	s	LED LD-701MG, GRN
D80	8-719-979-87	s	LED LD-701MG, GRN
D81	8-719-979-87	s	LED LD-701MG, GRN
D82	8-719-979-87	s	LED LD-701MG, GRN
D86	8-719-979-87	s	LED LD-701MG, GRN

(KY-223 BOARD)

Ref. No. or Q'ty	Part No.	SP	Description
D88	8-719-979-87	s	LED LD-701MG, GRN
D90	8-719-979-87	s	LED LD-701MG, GRN
D92	8-719-979-87	s	LED LD-701MG, GRN
D93	8-719-979-87	s	LED LD-701MG, GRN
D94	8-719-979-87	s	LED LD-701MG, GRN
D95	8-719-979-87	s	LED LD-701MG, GRN
D101	8-719-400-18	s	DIODE MA152WK
D102	8-719-109-84	s	DIODE RD5.1ES-B1
D214	8-719-030-51	s	DIODE LD-010MW
D224	8-719-030-51	s	DIODE LD-010MW
D235	8-719-979-87	s	LED LD-701MG, GRN
IC1	8-749-920-71	s	IC SI3522V
IC2	8-759-929-86	s	IC SN74LS14NS
IC3	8-759-970-26	s	IC PST523C
IC4	8-759-926-32	s	IC AM26LS32PC
IC5	8-759-926-31	s	IC AM26LS31PC
IC6	8-759-926-49	s	IC SN74HC245NS
IC7	8-759-926-68	s	IC SN74HC375ANS
IC8	8-795-926-80	s	IC SN74HC573BNS
IC9	8-795-926-80	s	IC SN74HC573BNS
IC10	8-752-800-46	s	IC CXQ70108P-8
IC11	8-759-922-49	s	IC SN74LS74ANS
IC12	8-759-925-78	s	IC SN74HC10NS
IC13	8-759-926-11	s	IC SN74HC138NS
IC14	8-759-088-10	o	IC 27C256-NPKY14V1.01, EPROM
IC15	8-752-337-81	s	IC CXK58257AM-12LL
IC16	8-752-806-91	s	IC CXQ71054P
IC17	8-759-107-51	s	IC CXQ71051P
IC18	8-759-006-95	s	IC MC74HC154N
IC19	8-759-106-58	s	IC UPD7004C
IC20	8-759-009-06	s	IC MC14052BF
IC21	8-759-009-06	s	IC MC14052BF
IC22	8-759-927-46	s	IC SN74HC00NS
IC23	8-759-927-23	s	IC SN74HCT574NS
IC24	8-759-927-23	s	IC SN74HCT574NS
IC25	8-759-930-93	s	IC SN74LS283NS
IC26	8-759-241-03	s	IC TC74HC191AF
IC27	8-759-241-03	s	IC TC74HC191AF
IC28	8-759-241-03	s	IC TC74HC191AF
IC29	8-759-241-03	s	IC TC74HC191AF
IC30	8-759-241-03	s	IC TC74HC191AF
IC31	8-759-241-03	s	IC TC74HC191AF
IC32	8-759-930-93	s	IC SN74LS283NS
IC33	8-759-930-93	s	IC SN74LS283NS
IC34	8-759-925-74	s	IC TC74HC04NS
IC35	8-759-926-48	s	IC SN74HC244NS
IC36	8-759-926-48	s	IC SN74HC244NS
IC37	8-759-926-48	s	IC SN74HC244NS
IC38	8-759-926-48	s	IC SN74HC244NS
IC39	8-759-926-48	s	IC SN74HC244NS
IC40	8-759-926-48	s	IC SN74HC244NS
IC41	8-759-926-48	s	IC SN74HC244NS
IC42	8-759-926-48	s	IC SN74HC244NS
IC43	8-759-926-11	s	IC SN74HC138NS
IC44	8-759-006-95	s	IC MC74HC154N
IC45	8-759-926-48	s	IC SN74HC244NS
IC46	8-759-926-48	s	IC SN74HC244NS
IC47	8-759-926-82	s	IC SN74HC574ANS

NOTE: Please see page 8-9 for the parts that are not listed in the parts list.

(KY-223 BOARD)

Ref. No. or Q'ty	Part No.	SP	Description
IC48	8-759-926-82	s	IC SN74HC574ANS
IC49	8-759-206-41	s	IC TD62083AP
IC50	8-759-926-82	s	IC SN74HC574ANS
IC51	8-759-206-41	s	IC TD62083AP
IC52	8-759-926-82	s	IC SN74HC574ANS
IC53	8-759-926-82	s	IC SN74HC574ANS
IC54	8-759-930-77	s	IC SN74LS247NS
IC55	8-759-930-77	s	IC SN74LS247NS
IC56	8-759-926-82	s	IC SN74HC574ANS
IC57	8-759-206-41	s	IC TD62083AP
IC58	8-759-926-82	s	IC SN74HC574ANS
IC59	8-759-206-41	s	IC TD62083AP
IC60	8-759-926-82	s	IC SN74HC574ANS
IC61	8-759-206-41	s	IC TD62083AP
IC62	8-759-926-82	s	IC SN74HC574ANS
IC63	8-759-206-41	s	IC TD62083AP
IC64	8-759-926-82	s	IC SN74HC574ANS
IC65	8-759-206-41	s	IC TD62083AP
IC66	8-759-926-82	s	IC SN74HC574ANS
IC67	8-759-206-41	s	IC TD62083AP
IC68	8-759-926-82	s	IC SN74HC574ANS
IC69	8-759-206-41	s	IC TD62083AP
IC70	8-759-926-82	s	IC SN74HC574ANS
IC71	8-759-206-41	s	IC TD62083AP
IC72	8-759-926-82	s	IC SN74HC574ANS
IC73	8-759-930-77	s	IC SN74LS247NS
IC74	8-759-930-77	s	IC SN74LS247NS
IC75	8-759-926-82	s	IC SN74HC574ANS
IC76	8-759-930-77	s	IC SN74LS247NS
IC77	8-759-926-82	s	IC SN74HC574ANS
IC78	8-759-206-41	s	IC TD62083AP
IC79	8-759-926-82	s	IC SN74HC574ANS
IC80	8-759-206-41	s	IC TD62083AP
IC81	8-759-926-82	s	IC SN74HC574ANS
IC82	8-759-206-41	s	IC TD62083AP
IC83	8-759-926-82	s	IC SN74HC574ANS
IC84	8-759-206-41	s	IC TD62083AP
IC85	8-759-926-82	s	IC SN74HC574ANS
IC86	8-759-206-41	s	IC TD62083AP
IC87	8-759-926-82	s	IC SN74HC574ANS
IC88	8-759-206-41	s	IC TD62083AP
IC89	8-759-907-81	s	IC SN74LS221NS
IC90	8-759-206-41	s	IC TD62083AP
IC91	8-759-206-41	s	IC TD62083AP
L1	1-412-525-31	s	INDUCTOR 10uH
ND7	8-719-906-41	s	LED GL-9D03D, RED
ND8	8-719-906-41	s	LED GL-9D03D, RED
ND9	8-719-906-41	s	LED GL-9D03D, RED
ND10	8-719-906-41	s	LED GL-9D03D, RED
ND11	8-719-906-41	s	LED GL-9D03D, RED
ND12	8-719-906-41	s	LED GL-9D03D, RED
ND13	8-719-906-41	s	LED GL-9D03D, RED
PS1	⚠1-532-637-00	s	LINK, IC 1.0A
R3	1-216-049-00	s	METAL, CHIP 1K 5% 1/10W
R4	1-216-043-00	s	METAL, CHIP 560 5% 1/10W
R5	1-216-053-00	s	METAL, CHIP 1.5K 5% 1/10W
R6	1-216-025-00	s	METAL, CHIP 100 5% 1/10W

(KY-223 BOARD)

Ref. No. or Q'ty	Part No.	SP	Description
R7	1-216-053-00	s	METAL, CHIP 1.5K 5% 1/10W
R8	1-216-053-00	s	METAL, CHIP 1.5K 5% 1/10W
R9	1-216-025-00	s	METAL, CHIP 100 5% 1/10W
R10	1-216-053-00	s	METAL, CHIP 1.5K 5% 1/10W
R11	1-216-097-00	s	METAL, CHIP 100K 5% 1/10W
R12	1-216-097-00	s	METAL, CHIP 100K 5% 1/10W
R14	1-216-073-00	s	METAL, CHIP 10K 5% 1/10W
R15	1-216-073-00	s	METAL, CHIP 10K 5% 1/10W
R16	1-216-073-00	s	METAL, CHIP 10K 5% 1/10W
R17	1-216-073-00	s	METAL, CHIP 10K 5% 1/10W
R18	1-216-073-00	s	METAL, CHIP 10K 5% 1/10W
R19	1-216-073-00	s	METAL, CHIP 10K 5% 1/10W
R20	1-216-073-00	s	METAL, CHIP 10K 5% 1/10W
R21	1-216-073-00	s	METAL, CHIP 10K 5% 1/10W
R22	1-216-073-00	s	METAL, CHIP 10K 5% 1/10W
R23	1-216-073-00	s	METAL, CHIP 10K 5% 1/10W
R24	1-216-073-00	s	METAL, CHIP 10K 5% 1/10W
R25	1-216-073-00	s	METAL, CHIP 10K 5% 1/10W
R26	1-216-073-00	s	METAL, CHIP 10K 5% 1/10W
R27	1-216-073-00	s	METAL, CHIP 10K 5% 1/10W
R28	1-216-073-00	s	METAL, CHIP 10K 5% 1/10W
R29	1-216-073-00	s	METAL, CHIP 10K 5% 1/10W
R30	1-216-073-00	s	METAL, CHIP 10K 5% 1/10W
R31	1-216-073-00	s	METAL, CHIP 10K 5% 1/10W
R32	1-216-073-00	s	METAL, CHIP 10K 5% 1/10W
R33	1-216-073-00	s	METAL, CHIP 10K 5% 1/10W
R34	1-216-073-00	s	METAL, CHIP 10K 5% 1/10W
R35	1-216-073-00	s	METAL, CHIP 10K 5% 1/10W
R36	1-216-073-00	s	METAL, CHIP 10K 5% 1/10W
R37	1-216-073-00	s	METAL, CHIP 10K 5% 1/10W
R38	1-216-073-00	s	METAL, CHIP 10K 5% 1/10W
R39	1-216-073-00	s	METAL, CHIP 10K 5% 1/10W
R40	1-216-073-00	s	METAL, CHIP 10K 5% 1/10W
R41	1-216-073-00	s	METAL, CHIP 10K 5% 1/10W
R42	1-216-073-00	s	METAL, CHIP 10K 5% 1/10W
R43	1-216-073-00	s	METAL, CHIP 10K 5% 1/10W
R44	1-216-073-00	s	METAL, CHIP 10K 5% 1/10W
R45	1-216-073-00	s	METAL, CHIP 10K 5% 1/10W
R46	1-216-073-00	s	METAL, CHIP 10K 5% 1/10W
R47	1-216-073-00	s	METAL, CHIP 10K 5% 1/10W
R48	1-216-073-00	s	METAL, CHIP 10K 5% 1/10W
R49	1-216-073-00	s	METAL, CHIP 10K 5% 1/10W
R50	1-216-073-00	s	METAL, CHIP 10K 5% 1/10W
R51	1-216-073-00	s	METAL, CHIP 10K 5% 1/10W
R52	1-216-073-00	s	METAL, CHIP 10K 5% 1/10W
R53	1-216-073-00	s	METAL, CHIP 10K 5% 1/10W
R54	1-216-073-00	s	METAL, CHIP 10K 5% 1/10W
R55	1-216-073-00	s	METAL, CHIP 10K 5% 1/10W
R56	1-216-073-00	s	METAL, CHIP 10K 5% 1/10W
R57	1-216-073-00	s	METAL, CHIP 10K 5% 1/10W
R58	1-216-073-00	s	METAL, CHIP 10K 5% 1/10W
R59	1-216-073-00	s	METAL, CHIP 10K 5% 1/10W
R60	1-216-073-00	s	METAL, CHIP 10K 5% 1/10W
R61	1-216-073-00	s	METAL, CHIP 10K 5% 1/10W
R62	1-216-073-00	s	METAL, CHIP 10K 5% 1/10W
R63	1-216-073-00	s	METAL, CHIP 10K 5% 1/10W
R64	1-216-073-00	s	METAL, CHIP 10K 5% 1/10W
R65	1-216-073-00	s	METAL, CHIP 10K 5% 1/10W
R66	1-216-073-00	s	METAL, CHIP 10K 5% 1/10W

NOTE: Please see page 8-9 for the parts that are not listed in the parts list.

(KY-223 BOARD)

Ref. No. or Q'ty	Part No.	SP	Description
R67	1-216-073-00	s	METAL, CHIP 10K 5% 1/10W
R68	1-216-073-00	s	METAL, CHIP 10K 5% 1/10W
R69	1-216-041-00	s	METAL, CHIP 470 5% 1/10W
R70	1-216-041-00	s	METAL, CHIP 470 5% 1/10W
R71	1-216-041-00	s	METAL, CHIP 470 5% 1/10W
R72	1-216-041-00	s	METAL, CHIP 470 5% 1/10W
R73	1-216-041-00	s	METAL, CHIP 470 5% 1/10W
R74	1-216-041-00	s	METAL, CHIP 470 5% 1/10W
R75	1-216-041-00	s	METAL, CHIP 470 5% 1/10W
R76	1-216-041-00	s	METAL, CHIP 470 5% 1/10W
R77	1-216-041-00	s	METAL, CHIP 470 5% 1/10W
R78	1-216-041-00	s	METAL, CHIP 470 5% 1/10W
R79	1-216-041-00	s	METAL, CHIP 470 5% 1/10W
R80	1-216-041-00	s	METAL, CHIP 470 5% 1/10W
R81	1-216-041-00	s	METAL, CHIP 470 5% 1/10W
R82	1-216-041-00	s	METAL, CHIP 470 5% 1/10W
R83	1-216-049-00	s	METAL, CHIP 1K 5% 1/10W
R84	1-216-049-00	s	METAL, CHIP 1K 5% 1/10W
R85	1-216-097-00	s	METAL, CHIP 100K 5% 1/10W
R86	1-216-097-00	s	METAL, CHIP 100K 5% 1/10W
R87	1-216-097-00	s	METAL, CHIP 100K 5% 1/10W
R88	1-216-097-00	s	METAL, CHIP 100K 5% 1/10W
R89	1-216-097-00	s	METAL, CHIP 100K 5% 1/10W
R90	1-216-097-00	s	METAL, CHIP 100K 5% 1/10W
R91	1-216-097-00	s	METAL, CHIP 100K 5% 1/10W
R92	1-216-097-00	s	METAL, CHIP 100K 5% 1/10W
R93	1-216-097-00	s	METAL, CHIP 100K 5% 1/10W
R94	1-216-097-00	s	METAL, CHIP 100K 5% 1/10W
R95	1-216-097-00	s	METAL, CHIP 100K 5% 1/10W
R96	1-216-097-00	s	METAL, CHIP 100K 5% 1/10W
R97	1-216-097-00	s	METAL, CHIP 100K 5% 1/10W
R98	1-216-097-00	s	METAL, CHIP 100K 5% 1/10W
R99	1-216-097-00	s	METAL, CHIP 100K 5% 1/10W
R100	1-216-097-00	s	METAL, CHIP 100K 5% 1/10W
R101	1-216-097-00	s	METAL, CHIP 100K 5% 1/10W
R102	1-216-097-00	s	METAL, CHIP 100K 5% 1/10W
R103	1-216-033-00	s	METAL, CHIP 220 5% 1/10W
R104	1-216-053-00	s	METAL, CHIP 1.5K 5% 1/10W
R105	1-216-053-00	s	METAL, CHIP 1.5K 5% 1/10W
R106	1-216-053-00	s	METAL, CHIP 1.5K 5% 1/10W
R107	1-216-053-00	s	METAL, CHIP 1.5K 5% 1/10W
R108	1-216-053-00	s	METAL, CHIP 1.5K 5% 1/10W
R109	1-216-053-00	s	METAL, CHIP 1.5K 5% 1/10W
R110	1-216-053-00	s	METAL, CHIP 1.5K 5% 1/10W
R111	1-216-053-00	s	METAL, CHIP 1.5K 5% 1/10W
R112	1-216-053-00	s	METAL, CHIP 1.5K 5% 1/10W
R113	1-216-053-00	s	METAL, CHIP 1.5K 5% 1/10W
R114	1-216-053-00	s	METAL, CHIP 1.5K 5% 1/10W
R115	1-216-053-00	s	METAL, CHIP 1.5K 5% 1/10W
R116	1-216-053-00	s	METAL, CHIP 1.5K 5% 1/10W
R117	1-216-053-00	s	METAL, CHIP 1.5K 5% 1/10W
R118	1-216-053-00	s	METAL, CHIP 1.5K 5% 1/10W
R119	1-216-053-00	s	METAL, CHIP 1.5K 5% 1/10W
R120	1-216-053-00	s	METAL, CHIP 1.5K 5% 1/10W
R121	1-216-053-00	s	METAL, CHIP 1.5K 5% 1/10W
R122	1-216-053-00	s	METAL, CHIP 1.5K 5% 1/10W
R123	1-216-053-00	s	METAL, CHIP 1.5K 5% 1/10W
R124	1-216-033-00	s	METAL, CHIP 220 5% 1/10W
R125	1-216-033-00	s	METAL, CHIP 220 5% 1/10W

(KY-223 BOARD)

Ref. No. or Q'ty	Part No.	SP	Description
R126	1-216-033-00	s	METAL, CHIP 220 5% 1/10W
R127	1-216-033-00	s	METAL, CHIP 220 5% 1/10W
R128	1-216-033-00	s	METAL, CHIP 220 5% 1/10W
R129	1-216-033-00	s	METAL, CHIP 220 5% 1/10W
R130	1-216-033-00	s	METAL, CHIP 220 5% 1/10W
R131	1-216-033-00	s	METAL, CHIP 220 5% 1/10W
R132	1-216-033-00	s	METAL, CHIP 220 5% 1/10W
R133	1-216-033-00	s	METAL, CHIP 220 5% 1/10W
R134	1-216-033-00	s	METAL, CHIP 220 5% 1/10W
R135	1-216-033-00	s	METAL, CHIP 220 5% 1/10W
R136	1-216-033-00	s	METAL, CHIP 220 5% 1/10W
R137	1-216-033-00	s	METAL, CHIP 220 5% 1/10W
R138	1-216-033-00	s	METAL, CHIP 220 5% 1/10W
R139	1-216-033-00	s	METAL, CHIP 220 5% 1/10W
R140	1-216-033-00	s	METAL, CHIP 220 5% 1/10W
R141	1-216-033-00	s	METAL, CHIP 220 5% 1/10W
R142	1-216-033-00	s	METAL, CHIP 220 5% 1/10W
R143	1-216-033-00	s	METAL, CHIP 220 5% 1/10W
R144	1-216-033-00	s	METAL, CHIP 220 5% 1/10W
R145	1-216-033-00	s	METAL, CHIP 220 5% 1/10W
R146	1-216-033-00	s	METAL, CHIP 220 5% 1/10W
R147	1-216-033-00	s	METAL, CHIP 220 5% 1/10W
R148	1-216-033-00	s	METAL, CHIP 220 5% 1/10W
R149	1-216-033-00	s	METAL, CHIP 220 5% 1/10W
R150	1-216-033-00	s	METAL, CHIP 220 5% 1/10W
R151	1-216-033-00	s	METAL, CHIP 220 5% 1/10W
R152	1-216-033-00	s	METAL, CHIP 220 5% 1/10W
R153	1-216-033-00	s	METAL, CHIP 220 5% 1/10W
R154	1-216-033-00	s	METAL, CHIP 220 5% 1/10W
R155	1-216-033-00	s	METAL, CHIP 220 5% 1/10W
R156	1-216-033-00	s	METAL, CHIP 220 5% 1/10W
R157	1-216-033-00	s	METAL, CHIP 220 5% 1/10W
R158	1-216-033-00	s	METAL, CHIP 220 5% 1/10W
R159	1-216-057-00	s	METAL, CHIP 2.2K 5% 1/10W
R160	1-216-057-00	s	METAL, CHIP 2.2K 5% 1/10W
R161	1-216-057-00	s	METAL, CHIP 2.2K 5% 1/10W
R162	1-216-057-00	s	METAL, CHIP 2.2K 5% 1/10W
R163	1-216-057-00	s	METAL, CHIP 2.2K 5% 1/10W
R164	1-216-057-00	s	METAL, CHIP 2.2K 5% 1/10W
R165	1-216-057-00	s	METAL, CHIP 2.2K 5% 1/10W
R166	1-216-057-00	s	METAL, CHIP 2.2K 5% 1/10W
R167	1-216-057-00	s	METAL, CHIP 2.2K 5% 1/10W
R168	1-216-057-00	s	METAL, CHIP 2.2K 5% 1/10W
R169	1-216-057-00	s	METAL, CHIP 2.2K 5% 1/10W
R170	1-216-057-00	s	METAL, CHIP 2.2K 5% 1/10W
R171	1-216-057-00	s	METAL, CHIP 2.2K 5% 1/10W
R172	1-216-057-00	s	METAL, CHIP 2.2K 5% 1/10W
R173	1-216-057-00	s	METAL, CHIP 2.2K 5% 1/10W
R174	1-216-057-00	s	METAL, CHIP 2.2K 5% 1/10W
R175	1-216-057-00	s	METAL, CHIP 2.2K 5% 1/10W
R176	1-216-057-00	s	METAL, CHIP 2.2K 5% 1/10W
R177	1-216-057-00	s	METAL, CHIP 2.2K 5% 1/10W
R178	1-216-057-00	s	METAL, CHIP 2.2K 5% 1/10W
R179	1-216-025-00	s	METAL, CHIP 100 5% 1/10W
R180	1-216-025-00	s	METAL, CHIP 100 5% 1/10W
R181	1-216-025-00	s	METAL, CHIP 100 5% 1/10W
R182	1-216-025-00	s	METAL, CHIP 100 5% 1/10W
R183	1-216-025-00	s	METAL, CHIP 100 5% 1/10W
R184	1-216-025-00	s	METAL, CHIP 100 5% 1/10W

NOTE: Please see page 8-9 for the parts that are not listed in the parts list.

(KY-223 BOARD)

Ref. No. or Q'ty	Part No.	SP	Description
R185	1-216-025-00	s	METAL, CHIP 100 5% 1/10W
R186	1-216-025-00	s	METAL, CHIP 100 5% 1/10W
R187	1-216-025-00	s	METAL, CHIP 100 5% 1/10W
R188	1-216-025-00	s	METAL, CHIP 100 5% 1/10W
R189	1-216-025-00	s	METAL, CHIP 100 5% 1/10W
R190	1-216-025-00	s	METAL, CHIP 100 5% 1/10W
R191	1-216-025-00	s	METAL, CHIP 100 5% 1/10W
R192	1-216-025-00	s	METAL, CHIP 100 5% 1/10W
R193	1-216-025-00	s	METAL, CHIP 100 5% 1/10W
R194	1-216-025-00	s	METAL, CHIP 100 5% 1/10W
R195	1-216-025-00	s	METAL, CHIP 100 5% 1/10W
R196	1-216-025-00	s	METAL, CHIP 100 5% 1/10W
R197	1-216-025-00	s	METAL, CHIP 100 5% 1/10W
R198	1-216-025-00	s	METAL, CHIP 100 5% 1/10W
R199	1-216-025-00	s	METAL, CHIP 100 5% 1/10W
R200	1-216-025-00	s	METAL, CHIP 100 5% 1/10W
R201	1-216-025-00	s	METAL, CHIP 100 5% 1/10W
R202	1-216-025-00	s	METAL, CHIP 100 5% 1/10W
R203	1-216-025-00	s	METAL, CHIP 100 5% 1/10W
R204	1-216-025-00	s	METAL, CHIP 100 5% 1/10W
R205	1-216-025-00	s	METAL, CHIP 100 5% 1/10W
R206	1-216-025-00	s	METAL, CHIP 100 5% 1/10W
R207	1-216-025-00	s	METAL, CHIP 100 5% 1/10W
R208	1-216-025-00	s	METAL, CHIP 100 5% 1/10W
R209	1-216-025-00	s	METAL, CHIP 100 5% 1/10W
R210	1-216-025-00	s	METAL, CHIP 100 5% 1/10W
R211	1-216-057-00	s	METAL, CHIP 2.2K 5% 1/10W
R212	1-216-057-00	s	METAL, CHIP 2.2K 5% 1/10W
R213	1-216-057-00	s	METAL, CHIP 2.2K 5% 1/10W
R214	1-216-057-00	s	METAL, CHIP 2.2K 5% 1/10W
R215	1-216-057-00	s	METAL, CHIP 2.2K 5% 1/10W
R216	1-216-057-00	s	METAL, CHIP 2.2K 5% 1/10W
R217	1-216-057-00	s	METAL, CHIP 2.2K 5% 1/10W
R218	1-216-057-00	s	METAL, CHIP 2.2K 5% 1/10W
R219	1-216-057-00	s	METAL, CHIP 2.2K 5% 1/10W
R220	1-216-057-00	s	METAL, CHIP 2.2K 5% 1/10W
R221	1-216-057-00	s	METAL, CHIP 2.2K 5% 1/10W
R222	1-216-057-00	s	METAL, CHIP 2.2K 5% 1/10W
R223	1-216-057-00	s	METAL, CHIP 2.2K 5% 1/10W
R224	1-216-057-00	s	METAL, CHIP 2.2K 5% 1/10W
R225	1-216-057-00	s	METAL, CHIP 2.2K 5% 1/10W
R226	1-216-057-00	s	METAL, CHIP 2.2K 5% 1/10W
R227	1-216-057-00	s	METAL, CHIP 2.2K 5% 1/10W
R228	1-216-057-00	s	METAL, CHIP 2.2K 5% 1/10W
R229	1-216-057-00	s	METAL, CHIP 2.2K 5% 1/10W
R230	1-216-057-00	s	METAL, CHIP 2.2K 5% 1/10W
R231	1-216-057-00	s	METAL, CHIP 2.2K 5% 1/10W
R232	1-216-057-00	s	METAL, CHIP 2.2K 5% 1/10W
R233	1-216-057-00	s	METAL, CHIP 2.2K 5% 1/10W
R234	1-216-057-00	s	METAL, CHIP 2.2K 5% 1/10W
R235	1-216-057-00	s	METAL, CHIP 2.2K 5% 1/10W
R236	1-216-057-00	s	METAL, CHIP 2.2K 5% 1/10W
R237	1-216-057-00	s	METAL, CHIP 2.2K 5% 1/10W
R238	1-216-057-00	s	METAL, CHIP 2.2K 5% 1/10W
R239	1-216-057-00	s	METAL, CHIP 2.2K 5% 1/10W
R240	1-216-057-00	s	METAL, CHIP 2.2K 5% 1/10W
R241	1-216-057-00	s	METAL, CHIP 2.2K 5% 1/10W
R242	1-216-057-00	s	METAL, CHIP 2.2K 5% 1/10W
R243	1-216-057-00	s	METAL, CHIP 2.2K 5% 1/10W

(KY-223 BOARD)

Ref. No. or Q'ty	Part No.	SP	Description
R244	1-216-057-00	s	METAL, CHIP 2.2K 5% 1/10W
R245	1-216-057-00	s	METAL, CHIP 2.2K 5% 1/10W
R246	1-216-057-00	s	METAL, CHIP 2.2K 5% 1/10W
R247	1-216-057-00	s	METAL, CHIP 2.2K 5% 1/10W
R248	1-216-057-00	s	METAL, CHIP 2.2K 5% 1/10W
R249	1-216-057-00	s	METAL, CHIP 2.2K 5% 1/10W
R250	1-216-057-00	s	METAL, CHIP 2.2K 5% 1/10W
R251	1-216-057-00	s	METAL, CHIP 2.2K 5% 1/10W
R252	1-216-057-00	s	METAL, CHIP 2.2K 5% 1/10W
R253	1-216-057-00	s	METAL, CHIP 2.2K 5% 1/10W
R254	1-216-057-00	s	METAL, CHIP 2.2K 5% 1/10W
R255	1-216-057-00	s	METAL, CHIP 2.2K 5% 1/10W
R256	1-216-057-00	s	METAL, CHIP 2.2K 5% 1/10W
R257	1-216-057-00	s	METAL, CHIP 2.2K 5% 1/10W
R258	1-216-057-00	s	METAL, CHIP 2.2K 5% 1/10W
R259	1-216-057-00	s	METAL, CHIP 2.2K 5% 1/10W
R260	1-216-057-00	s	METAL, CHIP 2.2K 5% 1/10W
R261	1-216-057-00	s	METAL, CHIP 2.2K 5% 1/10W
R262	1-216-057-00	s	METAL, CHIP 2.2K 5% 1/10W
R263	1-216-057-00	s	METAL, CHIP 2.2K 5% 1/10W
R264	1-216-057-00	s	METAL, CHIP 2.2K 5% 1/10W
R265	1-216-057-00	s	METAL, CHIP 2.2K 5% 1/10W
R266	1-216-057-00	s	METAL, CHIP 2.2K 5% 1/10W
R267	1-216-097-00	s	METAL, CHIP 100K 5% 1/10W
R268	1-216-097-00	s	METAL, CHIP 100K 5% 1/10W
R269	1-216-121-00	s	METAL, CHIP 1M 5% 1/10W
R270	1-216-097-00	s	METAL, CHIP 100K 5% 1/10W
R271	1-216-029-00	s	METAL, CHIP 150 5% 1/10W
R272	1-216-029-00	s	METAL, CHIP 150 5% 1/10W
R273	1-216-029-00	s	METAL, CHIP 150 5% 1/10W
R274	1-216-029-00	s	METAL, CHIP 150 5% 1/10W
R275	1-216-029-00	s	METAL, CHIP 150 5% 1/10W
R276	1-216-029-00	s	METAL, CHIP 150 5% 1/10W
R277	1-216-029-00	s	METAL, CHIP 150 5% 1/10W
R278	1-216-029-00	s	METAL, CHIP 150 5% 1/10W
R279	1-216-029-00	s	METAL, CHIP 150 5% 1/10W
R280	1-216-029-00	s	METAL, CHIP 150 5% 1/10W
R281	1-216-029-00	s	METAL, CHIP 150 5% 1/10W
R282	1-216-029-00	s	METAL, CHIP 150 5% 1/10W
R283	1-216-029-00	s	METAL, CHIP 150 5% 1/10W
R284	1-216-029-00	s	METAL, CHIP 150 5% 1/10W
R285	1-216-029-00	s	METAL, CHIP 150 5% 1/10W
R286	1-216-029-00	s	METAL, CHIP 150 5% 1/10W
R287	1-216-029-00	s	METAL, CHIP 150 5% 1/10W
R288	1-216-029-00	s	METAL, CHIP 150 5% 1/10W
R289	1-216-029-00	s	METAL, CHIP 150 5% 1/10W
R290	1-216-029-00	s	METAL, CHIP 150 5% 1/10W
R291	1-216-029-00	s	METAL, CHIP 150 5% 1/10W
R292	1-216-029-00	s	METAL, CHIP 150 5% 1/10W
R293	1-216-029-00	s	METAL, CHIP 150 5% 1/10W
R294	1-216-029-00	s	METAL, CHIP 150 5% 1/10W
R295	1-216-029-00	s	METAL, CHIP 150 5% 1/10W
R296	1-216-029-00	s	METAL, CHIP 150 5% 1/10W
R297	1-216-029-00	s	METAL, CHIP 150 5% 1/10W
R298	1-216-029-00	s	METAL, CHIP 150 5% 1/10W
R299	1-216-029-00	s	METAL, CHIP 150 5% 1/10W
R300	1-216-029-00	s	METAL, CHIP 150 5% 1/10W
R301	1-216-029-00	s	METAL, CHIP 150 5% 1/10W
R302	1-216-029-00	s	METAL, CHIP 150 5% 1/10W

NOTE: Please see page 8-9 for the parts that are not listed in the parts list.

(KY-223 BOARD)

Ref. No. or Q'ty	Part No.	SP	Description
R303	1-216-053-00	s	METAL, CHIP 1.5K 5% 1/10W
R304	1-216-025-00	s	METAL, CHIP 100 5% 1/10W
R305	1-216-029-00	s	METAL, CHIP 150 5% 1/10W
RV3	1-223-247-11	s	RES, VAR CARBON 10Kx2
RV4	1-223-247-11	s	RES, VAR CARBON 10Kx2
S20	1-571-654-21	s	SWITCH, PUSH
S21	1-571-654-21	s	SWITCH, PUSH
S22	1-571-654-21	s	SWITCH, PUSH
S23	1-571-654-21	s	SWITCH, PUSH
S24	1-571-654-21	s	SWITCH, PUSH
S25	1-571-653-21	s	SWITCH, PUSH
S26	1-571-654-21	s	SWITCH, PUSH
S27	1-571-654-21	s	SWITCH, PUSH
S28	1-571-654-21	s	SWITCH, PUSH
S29	1-571-654-21	s	SWITCH, PUSH
S30	1-692-347-11	s	SWITCH, PUSH
S31	1-571-653-21	s	SWITCH, PUSH
S32	1-571-654-21	s	SWITCH, PUSH
S33	1-571-653-21	s	SWITCH, PUSH
S34	1-571-653-21	s	SWITCH, PUSH
S35	1-571-653-21	s	SWITCH, PUSH
S36	1-571-654-21	s	SWITCH, PUSH
S37	1-571-654-21	s	SWITCH, PUSH
S38	1-571-654-21	s	SWITCH, PUSH
S39	1-571-654-21	s	SWITCH, PUSH
S40	1-692-347-11	s	SWITCH, PUSH
S41	1-692-347-11	s	SWITCH, PUSH
S42	1-692-347-11	s	SWITCH, PUSH
S43	1-692-347-11	s	SWITCH, PUSH
S44	1-692-347-11	s	SWITCH, PUSH
S45	1-692-347-11	s	SWITCH, PUSH
S46	1-692-347-11	s	SWITCH, PUSH
S47	1-692-347-11	s	SWITCH, PUSH
S48	1-692-347-11	s	SWITCH, PUSH
S49	1-692-347-11	s	SWITCH, PUSH
S50	1-571-653-21	s	SWITCH, PUSH
S51	1-571-654-21	s	SWITCH, PUSH
S52	1-571-654-21	s	SWITCH, PUSH
S53	1-571-654-21	s	SWITCH, PUSH
S54	1-571-654-21	s	SWITCH, PUSH
S55	1-692-348-11	s	SWITCH, PUSH
S56	1-571-654-21	s	SWITCH, PUSH
S57	1-571-654-21	s	SWITCH, PUSH
S58	1-692-348-11	s	SWITCH, PUSH
S59	1-692-348-11	s	SWITCH, PUSH
S60	1-692-348-11	s	SWITCH, PUSH
S61	1-692-348-11	s	SWITCH, PUSH
S62	1-692-348-11	s	SWITCH, PUSH
S63	1-692-348-11	s	SWITCH, PUSH
S64	1-692-348-11	s	SWITCH, PUSH
S65	1-692-348-11	s	SWITCH, PUSH
S66	1-692-348-11	s	SWITCH, PUSH
S67	1-692-348-11	s	SWITCH, PUSH
S68	1-692-348-11	s	SWITCH, PUSH
S69	1-692-348-11	s	SWITCH, PUSH
S70	1-692-348-11	s	SWITCH, PUSH
S71	1-692-348-11	s	SWITCH, PUSH
S72	1-692-348-11	s	SWITCH, PUSH

NOTE: Please see page 8-9 for the parts that are not listed in the parts list.

(KY-223 BOARD)

Ref. No. or Q'ty	Part No.	SP	Description
S73	1-692-348-11	s	SWITCH, PUSH
S74	1-571-654-21	s	SWITCH, PUSH
X1	1-577-255-11	s	OSC, CRYSTAL 8.00 MHz

KY-225 BOARD

Ref. No. or Q'ty	Part No.	SP	Description
1pc	A-8271-687-A	o	MOUNTED CIRCUIT BOARD, KY-225
6pcs	2-140-311-04	s	KEY TOP
6pcs	3-178-140-01	o	SPACER
12pcs	4-928-315-01	s	KEY TOP
C1	1-124-589-11	s	ELECT 47uF 20% 16V
C3	1-124-589-11	s	ELECT 47uF 20% 16V
C26	1-124-589-11	s	ELECT 47uF 20% 16V
C46	1-124-589-11	s	ELECT 47uF 20% 16V
C48	1-124-589-11	s	ELECT 47uF 20% 16V
CN1	1-506-480-11	s	CONNECTOR, 15P, MALE
CN2	1-506-480-11	s	CONNECTOR, 15P, MALE
CN3	1-506-480-11	s	CONNECTOR, 15P, MALE
CN4	1-506-469-11	s	CONNECTOR 4P, MALE
CN5	1-506-475-11	s	CONNECTOR, 10P, MALE
CN6	1-506-469-11	s	CONNECTOR 4P, MALE
D6	8-719-979-87	s	LED LD-701MG, GRN
D7	8-719-979-87	s	LED LD-701MG, GRN
D8	8-719-979-87	s	LED LD-701MG, GRN
D9	8-719-979-87	s	LED LD-701MG, GRN
D10	8-719-979-87	s	LED LD-701MG, GRN
D11	8-719-979-87	s	LED LD-701MG, GRN
D12	8-719-979-87	s	LED LD-701MG, GRN
D13	8-719-979-87	s	LED LD-701MG, GRN
D14	8-719-979-87	s	LED LD-701MG, GRN
D16	8-719-979-87	s	LED LD-701MG, GRN
D17	8-719-979-87	s	LED LD-701MG, GRN
D18	8-719-979-87	s	LED LD-701MG, GRN
D19	8-719-979-87	s	LED LD-701MG, GRN
D21	8-719-979-87	s	LED LD-701MG, GRN
D22	8-719-979-87	s	LED LD-701MG, GRN
D23	8-719-979-87	s	LED LD-701MG, GRN
D24	8-719-979-87	s	LED LD-701MG, GRN
D26	8-719-979-87	s	LED LD-701MG, GRN
D27	8-719-979-87	s	LED LD-701MG, GRN
D28	8-719-979-87	s	LED LD-701MG, GRN
IC1	8-759-926-11	s	IC SN74HC138NS
IC2	8-759-926-11	s	IC SN74HC138NS
IC3	8-759-926-48	s	IC SN74HC244NS
IC4	8-759-926-48	s	IC SN74HC244NS
IC5	8-759-926-48	s	IC SN74HC244NS
IC6	8-759-926-48	s	IC SN74HC244NS
IC7	8-759-926-82	s	IC SN74HC574ANS
IC8	8-759-930-77	s	IC SN74LS247NS
IC9	8-759-930-77	s	IC SN74LS247NS
IC10	8-759-926-82	s	IC SN74HC574ANS
IC11	8-759-206-41	s	IC TD62083AP
IC12	8-759-926-82	s	IC SN74HC574ANS
IC13	8-759-206-41	s	IC TD62083AP
IC14	8-759-926-82	s	IC SN74HC574ANS
IC15	8-759-206-41	s	IC TD62083AP
IC16	8-759-926-82	s	IC SN74HC574ANS
IC17	8-759-206-41	s	IC TD62083AP
IC18	8-759-926-82	s	IC SN74HC574ANS
IC19	8-759-930-77	s	IC SN74LS247NS
IC20	8-759-930-77	s	IC SN74LS247NS
IC21	8-759-926-82	s	IC SN74HC574ANS
IC22	8-759-206-41	s	IC TD62083AP
IC23	8-759-926-82	s	IC SN74HC574ANS

(KY-225 BOARD)

Ref. No. or Q'ty	Part No.	SP	Description
IC24	8-759-930-77	s	IC SN74LS247NS
IC25	8-759-930-77	s	IC SN74LS247NS
IC26	8-759-009-06	s	IC MC14052BF
ND1	8-719-906-41	s	LED GL-9D03D, RED
ND2	8-719-906-41	s	LED GL-9D03D, RED
ND3	8-719-906-41	s	LED GL-9D03D, RED
ND4	8-719-906-41	s	LED GL-9D03D, RED
ND5	8-719-906-41	s	LED GL-9D03D, RED
ND6	8-719-906-41	s	LED GL-9D03D, RED
R1	1-216-097-00	s	METAL, CHIP 100K 5% 1/10W
R2	1-216-097-00	s	METAL, CHIP 100K 5% 1/10W
R3	1-216-097-00	s	METAL, CHIP 100K 5% 1/10W
R4	1-216-097-00	s	METAL, CHIP 100K 5% 1/10W
R5	1-216-097-00	s	METAL, CHIP 100K 5% 1/10W
R6	1-216-097-00	s	METAL, CHIP 100K 5% 1/10W
R7	1-216-097-00	s	METAL, CHIP 100K 5% 1/10W
R8	1-216-097-00	s	METAL, CHIP 100K 5% 1/10W
R9	1-216-097-00	s	METAL, CHIP 100K 5% 1/10W
R10	1-216-097-00	s	METAL, CHIP 100K 5% 1/10W
R11	1-216-097-00	s	METAL, CHIP 100K 5% 1/10W
R12	1-216-097-00	s	METAL, CHIP 100K 5% 1/10W
R13	1-216-097-00	s	METAL, CHIP 100K 5% 1/10W
R14	1-216-097-00	s	METAL, CHIP 100K 5% 1/10W
R33	1-216-073-00	s	METAL, CHIP 10K 5% 1/10W
R34	1-216-073-00	s	METAL, CHIP 10K 5% 1/10W
R35	1-216-073-00	s	METAL, CHIP 10K 5% 1/10W
R36	1-216-073-00	s	METAL, CHIP 10K 5% 1/10W
R37	1-216-073-00	s	METAL, CHIP 10K 5% 1/10W
R38	1-216-073-00	s	METAL, CHIP 10K 5% 1/10W
R39	1-216-073-00	s	METAL, CHIP 10K 5% 1/10W
R40	1-216-073-00	s	METAL, CHIP 10K 5% 1/10W
R41	1-216-073-00	s	METAL, CHIP 10K 5% 1/10W
R42	1-216-073-00	s	METAL, CHIP 10K 5% 1/10W
R43	1-216-073-00	s	METAL, CHIP 10K 5% 1/10W
R44	1-216-073-00	s	METAL, CHIP 10K 5% 1/10W
R45	1-216-073-00	s	METAL, CHIP 10K 5% 1/10W
R46	1-216-073-00	s	METAL, CHIP 10K 5% 1/10W
R47	1-216-073-00	s	METAL, CHIP 10K 5% 1/10W
R48	1-216-073-00	s	METAL, CHIP 10K 5% 1/10W
R49	1-216-073-00	s	METAL, CHIP 10K 5% 1/10W
R51	1-216-073-00	s	METAL, CHIP 10K 5% 1/10W
R52	1-216-049-00	s	METAL, CHIP 1K 5% 1/10W
R53	1-216-049-00	s	METAL, CHIP 1K 5% 1/10W
R54	1-216-097-00	s	METAL, CHIP 100K 5% 1/10W
R55	1-216-097-00	s	METAL, CHIP 100K 5% 1/10W
R56	1-216-097-00	s	METAL, CHIP 100K 5% 1/10W
R57	1-216-097-00	s	METAL, CHIP 100K 5% 1/10W
R58	1-216-097-00	s	METAL, CHIP 100K 5% 1/10W
R59	1-216-097-00	s	METAL, CHIP 100K 5% 1/10W
R60	1-216-053-00	s	METAL, CHIP 1.5K 5% 1/10W
R61	1-216-053-00	s	METAL, CHIP 1.5K 5% 1/10W
R62	1-216-053-00	s	METAL, CHIP 1.5K 5% 1/10W
R63	1-216-053-00	s	METAL, CHIP 1.5K 5% 1/10W
R64	1-216-053-00	s	METAL, CHIP 1.5K 5% 1/10W
R65	1-216-053-00	s	METAL, CHIP 1.5K 5% 1/10W
R66	1-216-053-00	s	METAL, CHIP 1.5K 5% 1/10W
R67	1-216-053-00	s	METAL, CHIP 1.5K 5% 1/10W
R68	1-216-053-00	s	METAL, CHIP 1.5K 5% 1/10W

NOTE: Please see page 8-9 for the parts that are not listed in the parts list.

(KY-225 BOARD)

Ref. No. or Q'ty	Part No.	SP	Description
R69	1-216-053-00	s	METAL, CHIP 1.5K 5% 1/10W
R70	1-216-053-00	s	METAL, CHIP 1.5K 5% 1/10W
R71	1-216-053-00	s	METAL, CHIP 1.5K 5% 1/10W
R72	1-216-025-00	s	METAL, CHIP 100 5% 1/10W
R73	1-216-025-00	s	METAL, CHIP 100 5% 1/10W
R74	1-216-025-00	s	METAL, CHIP 100 5% 1/10W
R75	1-216-025-00	s	METAL, CHIP 100 5% 1/10W
R76	1-216-025-00	s	METAL, CHIP 100 5% 1/10W
R77	1-216-025-00	s	METAL, CHIP 100 5% 1/10W
R78	1-216-025-00	s	METAL, CHIP 100 5% 1/10W
R79	1-216-025-00	s	METAL, CHIP 100 5% 1/10W
R80	1-216-025-00	s	METAL, CHIP 100 5% 1/10W
R81	1-216-025-00	s	METAL, CHIP 100 5% 1/10W
R82	1-216-025-00	s	METAL, CHIP 100 5% 1/10W
R83	1-216-025-00	s	METAL, CHIP 100 5% 1/10W
R84	1-216-025-00	s	METAL, CHIP 100 5% 1/10W
R85	1-216-025-00	s	METAL, CHIP 100 5% 1/10W
R86	1-216-025-00	s	METAL, CHIP 100 5% 1/10W
R87	1-216-025-00	s	METAL, CHIP 100 5% 1/10W
R88	1-216-025-00	s	METAL, CHIP 100 5% 1/10W
R89	1-216-025-00	s	METAL, CHIP 100 5% 1/10W
R90	1-216-025-00	s	METAL, CHIP 100 5% 1/10W
R91	1-216-025-00	s	METAL, CHIP 100 5% 1/10W
R92	1-216-057-00	s	METAL, CHIP 2.2K 5% 1/10W
R93	1-216-057-00	s	METAL, CHIP 2.2K 5% 1/10W
R94	1-216-057-00	s	METAL, CHIP 2.2K 5% 1/10W
R95	1-216-057-00	s	METAL, CHIP 2.2K 5% 1/10W
R96	1-216-057-00	s	METAL, CHIP 2.2K 5% 1/10W
R97	1-216-057-00	s	METAL, CHIP 2.2K 5% 1/10W
R98	1-216-057-00	s	METAL, CHIP 2.2K 5% 1/10W
R99	1-216-057-00	s	METAL, CHIP 2.2K 5% 1/10W
R100	1-216-057-00	s	METAL, CHIP 2.2K 5% 1/10W
R101	1-216-057-00	s	METAL, CHIP 2.2K 5% 1/10W
R102	1-216-057-00	s	METAL, CHIP 2.2K 5% 1/10W
R103	1-216-057-00	s	METAL, CHIP 2.2K 5% 1/10W
R104	1-216-057-00	s	METAL, CHIP 2.2K 5% 1/10W
R105	1-216-057-00	s	METAL, CHIP 2.2K 5% 1/10W
R106	1-216-057-00	s	METAL, CHIP 2.2K 5% 1/10W
R107	1-216-057-00	s	METAL, CHIP 2.2K 5% 1/10W
R108	1-216-057-00	s	METAL, CHIP 2.2K 5% 1/10W
R109	1-216-057-00	s	METAL, CHIP 2.2K 5% 1/10W
R110	1-216-057-00	s	METAL, CHIP 2.2K 5% 1/10W
R111	1-216-057-00	s	METAL, CHIP 2.2K 5% 1/10W
R112	1-216-057-00	s	METAL, CHIP 2.2K 5% 1/10W
R113	1-216-057-00	s	METAL, CHIP 2.2K 5% 1/10W
R114	1-216-057-00	s	METAL, CHIP 2.2K 5% 1/10W
R115	1-216-057-00	s	METAL, CHIP 2.2K 5% 1/10W
R116	1-216-057-00	s	METAL, CHIP 2.2K 5% 1/10W
R117	1-216-057-00	s	METAL, CHIP 2.2K 5% 1/10W
R118	1-216-057-00	s	METAL, CHIP 2.2K 5% 1/10W
R119	1-216-057-00	s	METAL, CHIP 2.2K 5% 1/10W
R120	1-216-057-00	s	METAL, CHIP 2.2K 5% 1/10W
R121	1-216-057-00	s	METAL, CHIP 2.2K 5% 1/10W
R122	1-216-057-00	s	METAL, CHIP 2.2K 5% 1/10W
R123	1-216-057-00	s	METAL, CHIP 2.2K 5% 1/10W
R124	1-216-057-00	s	METAL, CHIP 2.2K 5% 1/10W
R125	1-216-057-00	s	METAL, CHIP 2.2K 5% 1/10W
R126	1-216-057-00	s	METAL, CHIP 2.2K 5% 1/10W
R127	1-216-057-00	s	METAL, CHIP 2.2K 5% 1/10W

(KY-225 BOARD)

Ref. No. or Q'ty	Part No.	SP	Description
R128	1-216-057-00	s	METAL, CHIP 2.2K 5% 1/10W
R129	1-216-057-00	s	METAL, CHIP 2.2K 5% 1/10W
R130	1-216-057-00	s	METAL, CHIP 2.2K 5% 1/10W
R131	1-216-057-00	s	METAL, CHIP 2.2K 5% 1/10W
R132	1-216-057-00	s	METAL, CHIP 2.2K 5% 1/10W
R133	1-216-057-00	s	METAL, CHIP 2.2K 5% 1/10W
R134	1-216-057-00	s	METAL, CHIP 2.2K 5% 1/10W
R135	1-216-057-00	s	METAL, CHIP 2.2K 5% 1/10W
R136	1-216-057-00	s	METAL, CHIP 2.2K 5% 1/10W
R137	1-216-057-00	s	METAL, CHIP 2.2K 5% 1/10W
R138	1-216-057-00	s	METAL, CHIP 2.2K 5% 1/10W
R139	1-216-057-00	s	METAL, CHIP 2.2K 5% 1/10W
R140	1-216-029-00	s	METAL, CHIP 150 5% 1/10W
R141	1-216-029-00	s	METAL, CHIP 150 5% 1/10W
R142	1-216-029-00	s	METAL, CHIP 150 5% 1/10W
R143	1-216-029-00	s	METAL, CHIP 150 5% 1/10W
R144	1-216-029-00	s	METAL, CHIP 150 5% 1/10W
R145	1-216-029-00	s	METAL, CHIP 150 5% 1/10W
R146	1-216-029-00	s	METAL, CHIP 150 5% 1/10W
R147	1-216-029-00	s	METAL, CHIP 150 5% 1/10W
R148	1-216-029-00	s	METAL, CHIP 150 5% 1/10W
R149	1-216-029-00	s	METAL, CHIP 150 5% 1/10W
R150	1-216-029-00	s	METAL, CHIP 150 5% 1/10W
R151	1-216-029-00	s	METAL, CHIP 150 5% 1/10W
R152	1-216-029-00	s	METAL, CHIP 150 5% 1/10W
R153	1-216-029-00	s	METAL, CHIP 150 5% 1/10W
R154	1-216-029-00	s	METAL, CHIP 150 5% 1/10W
R155	1-216-029-00	s	METAL, CHIP 150 5% 1/10W
R156	1-216-029-00	s	METAL, CHIP 150 5% 1/10W
R157	1-216-029-00	s	METAL, CHIP 150 5% 1/10W
R158	1-216-029-00	s	METAL, CHIP 150 5% 1/10W
R159	1-216-029-00	s	METAL, CHIP 150 5% 1/10W
RV1	1-223-247-11	s	RES, VAR CARBON 10Kx2
RV2	1-223-247-11	s	RES, VAR CARBON 10Kx2
S1	1-571-654-21	s	SWITCH, PUSH
S2	1-571-654-21	s	SWITCH, PUSH
S3	1-571-654-21	s	SWITCH, PUSH
S4	1-571-654-21	s	SWITCH, PUSH
S5	1-571-654-21	s	SWITCH, PUSH
S6	1-571-653-21	s	SWITCH, PUSH
S7	1-571-653-21	s	SWITCH, PUSH
S8	1-571-653-21	s	SWITCH, PUSH
S9	1-571-654-21	s	SWITCH, PUSH
S10	1-571-653-21	s	SWITCH, PUSH
S11	1-571-654-21	s	SWITCH, PUSH
S12	1-571-653-21	s	SWITCH, PUSH
S13	1-571-654-21	s	SWITCH, PUSH
S14	1-571-653-21	s	SWITCH, PUSH
S15	1-571-654-21	s	SWITCH, PUSH
S16	1-571-654-21	s	SWITCH, PUSH
S17	1-571-654-21	s	SWITCH, PUSH
S19	1-571-654-21	s	SWITCH, PUSH

NOTE: Please see page 8-9 for the parts that are not listed in the parts list.

KY-226 BOARD

Ref. No. or Q'ty	Part No.	SP	Description
1pc	A-8271-688-A	o	MOUNTED CIRCUIT BOARD, KY-226
4pcs	7-685-646-79	s	SCREW +BVTP 3X8 TYPE2 N-S
C1	1-124-589-11	s	ELECT 47uF 20% 16V
CN1	1-506-469-11	s	CONNECTOR 4P, MALE
RV1	1-238-724-11	s	RES, VAR(STICK) CARBON 10Kx2

LE-55B BOARD

Ref. No. or Q'ty	Part No.	SP	Description
1pc	1-620-338-11	o	PRINTED CIRCUIT BOARD, LE-55
4pcs	3-674-390-00	o	HOLDER (B), LED
CN1	1-506-482-11	s	CONNECTOR 3P, MALE
D1	8-719-812-32	s	LED TLY123, YEL
D2	8-719-812-32	s	LED TLY123, YEL
D3	8-719-812-32	s	LED TLY123, YEL
D4	8-719-812-32	s	LED TLY123, YEL
R1	1-249-408-11	s	CARBON 180 5% 1/4W
R2	1-249-408-11	s	CARBON 180 5% 1/4W
R3	1-249-408-11	s	CARBON 180 5% 1/4W
R4	1-249-408-11	s	CARBON 180 5% 1/4W

MB-385 BOARD

Ref. No. or Q'ty	Part No.	SP	Description
1pc	A-8271-678-A	o	MOUNTED CIRCUIT BOARD, MB-385
28pcs	7-685-871-09	s	SCREW +BVTT 3X6 (S)
CN4	1-563-337-11	s	CONNECTOR, DIN 96P, FEMALE
CN5	1-563-337-11	s	CONNECTOR, DIN 96P, FEMALE
CN6	1-563-337-11	s	CONNECTOR, DIN 96P, FEMALE
CN7	1-563-337-11	s	CONNECTOR, DIN 96P, FEMALE
CN8	1-563-337-11	s	CONNECTOR, DIN 96P, FEMALE
CN9	1-563-337-11	s	CONNECTOR, DIN 96P, FEMALE
CN10	1-563-337-11	s	CONNECTOR, DIN 96P, FEMALE
CN11	1-563-337-11	s	CONNECTOR, DIN 96P, FEMALE
CN12	1-563-337-11	s	CONNECTOR, DIN 96P, FEMALE
CN13	1-563-337-11	s	CONNECTOR, DIN 96P, FEMALE
CN14	1-563-337-11	s	CONNECTOR, DIN 96P, FEMALE
CN15	1-563-337-11	s	CONNECTOR, DIN 96P, FEMALE
CN16	1-563-337-11	s	CONNECTOR, DIN 96P, FEMALE
CN18	1-563-337-11	s	CONNECTOR, DIN 96P, FEMALE
CN22	1-506-468-11	s	CONNECTOR 3P, MALE
CN23	1-564-241-00	o	CONNECTOR, 4P, MALE
CN24	1-564-241-00	o	CONNECTOR, 4P, MALE
CN25	1-564-242-00	o	CONNECTOR, 5P

NOTE: Please see page 8-9 for the parts that are not listed in the parts list.

MY-54 BOARD

Ref. No. or Q'ty	Part No.	SP	Description
1pc	A-8271-679-A	o	MOUNTED CIRCUIT BOARD, MY-54
2pcs	3-166-184-01	o	LEVER, PC BOARD
2pcs	3-166-185-01	s	NUT, PLATE
1pc	3-178-157-01	o	PLATE, SHIELD
8pcs	4-886-821-11	s	SCREW, S TIGHT, +PTTWH 3X6
2pcs	7-622-207-05	s	N 2.6, TYPE 2
2pcs	7-626-320-11	s	PIN, SPRING 3X8
6pcs	7-628-254-40	s	SCREW +PS 2.6X12
C1	1-161-055-00	s	CERAMIC 0.022uF 10% 50V
C2	1-161-055-00	s	CERAMIC 0.022uF 10% 50V
C3	1-161-055-00	s	CERAMIC 0.022uF 10% 50V
C4	1-161-055-00	s	CERAMIC 0.022uF 10% 50V
C5	1-161-055-00	s	CERAMIC 0.022uF 10% 50V
C6	1-161-055-00	s	CERAMIC 0.022uF 10% 50V
C7	1-161-055-00	s	CERAMIC 0.022uF 10% 50V
C8	1-161-055-00	s	CERAMIC 0.022uF 10% 50V
C10	1-161-055-00	s	CERAMIC 0.022uF 10% 50V
C11	1-161-055-00	s	CERAMIC 0.022uF 10% 50V
C12	1-161-055-00	s	CERAMIC 0.022uF 10% 50V
C13	1-161-055-00	s	CERAMIC 0.022uF 10% 50V
C14	1-161-055-00	s	CERAMIC 0.022uF 10% 50V
C15	1-161-055-00	s	CERAMIC 0.022uF 10% 50V
C16	1-161-055-00	s	CERAMIC 0.022uF 10% 50V
C17	1-161-055-00	s	CERAMIC 0.022uF 10% 50V
C18	1-161-055-00	s	CERAMIC 0.022uF 10% 50V
C19	1-161-055-00	s	CERAMIC 0.022uF 10% 50V
C20	1-161-055-00	s	CERAMIC 0.022uF 10% 50V
C21	1-161-055-00	s	CERAMIC 0.022uF 10% 50V
C22	1-161-055-00	s	CERAMIC 0.022uF 10% 50V
C23	1-161-055-00	s	CERAMIC 0.022uF 10% 50V
C24	1-161-055-00	s	CERAMIC 0.022uF 10% 50V
C25	1-161-055-00	s	CERAMIC 0.022uF 10% 50V
C26	1-161-055-00	s	CERAMIC 0.022uF 10% 50V
C27	1-161-055-00	s	CERAMIC 0.022uF 10% 50V
C28	1-161-055-00	s	CERAMIC 0.022uF 10% 50V
C29	1-161-055-00	s	CERAMIC 0.022uF 10% 50V
C30	1-161-055-00	s	CERAMIC 0.022uF 10% 50V
C31	1-161-055-00	s	CERAMIC 0.022uF 10% 50V
C32	1-161-055-00	s	CERAMIC 0.022uF 10% 50V
C33	1-161-055-00	s	CERAMIC 0.022uF 10% 50V
C34	1-161-055-00	s	CERAMIC 0.022uF 10% 50V
C35	1-161-055-00	s	CERAMIC 0.022uF 10% 50V
C36	1-161-055-00	s	CERAMIC 0.022uF 10% 50V
C37	1-161-055-00	s	CERAMIC 0.022uF 10% 50V
C38	1-161-055-00	s	CERAMIC 0.022uF 10% 50V
C39	1-161-055-00	s	CERAMIC 0.022uF 10% 50V
C40	1-161-055-00	s	CERAMIC 0.022uF 10% 50V
C41	1-161-055-00	s	CERAMIC 0.022uF 10% 50V
C42	1-161-055-00	s	CERAMIC 0.022uF 10% 50V
C43	1-161-055-00	s	CERAMIC 0.022uF 10% 50V
C44	1-161-055-00	s	CERAMIC 0.022uF 10% 50V
C45	1-161-055-00	s	CERAMIC 0.022uF 10% 50V
C46	1-161-055-00	s	CERAMIC 0.022uF 10% 50V
C47	1-161-055-00	s	CERAMIC 0.022uF 10% 50V
C48	1-161-055-00	s	CERAMIC 0.022uF 10% 50V
C49	1-161-055-00	s	CERAMIC 0.022uF 10% 50V
C50	1-161-055-00	s	CERAMIC 0.022uF 10% 50V
C51	1-161-055-00	s	CERAMIC 0.022uF 10% 50V

(MY-54 BOARD)

Ref. No. or Q'ty	Part No.	SP	Description
C52	1-161-055-00	s	CERAMIC 0.022uF 10% 50V
C53	1-161-055-00	s	CERAMIC 0.022uF 10% 50V
C54	1-161-055-00	s	CERAMIC 0.022uF 10% 50V
C55	1-161-055-00	s	CERAMIC 0.022uF 10% 50V
C56	1-161-055-00	s	CERAMIC 0.022uF 10% 50V
C57	1-161-055-00	s	CERAMIC 0.022uF 10% 50V
C58	1-161-055-00	s	CERAMIC 0.022uF 10% 50V
C59	1-161-055-00	s	CERAMIC 0.022uF 10% 50V
C60	1-161-055-00	s	CERAMIC 0.022uF 10% 50V
C61	1-161-055-00	s	CERAMIC 0.022uF 10% 50V
C62	1-161-055-00	s	CERAMIC 0.022uF 10% 50V
C63	1-161-055-00	s	CERAMIC 0.022uF 10% 50V
C64	1-161-055-00	s	CERAMIC 0.022uF 10% 50V
C65	1-161-055-00	s	CERAMIC 0.022uF 10% 50V
C66	1-161-055-00	s	CERAMIC 0.022uF 10% 50V
C67	1-161-055-00	s	CERAMIC 0.022uF 10% 50V
C68	1-161-055-00	s	CERAMIC 0.022uF 10% 50V
C69	1-161-055-00	s	CERAMIC 0.022uF 10% 50V
C70	1-161-055-00	s	CERAMIC 0.022uF 10% 50V
C71	1-161-055-00	s	CERAMIC 0.022uF 10% 50V
C72	1-161-055-00	s	CERAMIC 0.022uF 10% 50V
C73	1-161-055-00	s	CERAMIC 0.022uF 10% 50V
C74	1-161-055-00	s	CERAMIC 0.022uF 10% 50V
C75	1-161-055-00	s	CERAMIC 0.022uF 10% 50V
C76	1-161-055-00	s	CERAMIC 0.022uF 10% 50V
C77	1-161-055-00	s	CERAMIC 0.022uF 10% 50V
C78	1-161-055-00	s	CERAMIC 0.022uF 10% 50V
C79	1-161-055-00	s	CERAMIC 0.022uF 10% 50V
C80	1-161-055-00	s	CERAMIC 0.022uF 10% 50V
C81	1-161-055-00	s	CERAMIC 0.022uF 10% 50V
C82	1-161-055-00	s	CERAMIC 0.022uF 10% 50V
C83	1-161-055-00	s	CERAMIC 0.022uF 10% 50V
C84	1-161-055-00	s	CERAMIC 0.022uF 10% 50V
C85	1-161-055-00	s	CERAMIC 0.022uF 10% 50V
C86	1-161-055-00	s	CERAMIC 0.022uF 10% 50V
C87	1-161-055-00	s	CERAMIC 0.022uF 10% 50V
C88	1-161-055-00	s	CERAMIC 0.022uF 10% 50V
C89	1-161-055-00	s	CERAMIC 0.022uF 10% 50V
C90	1-161-055-00	s	CERAMIC 0.022uF 10% 50V
C91	1-161-055-00	s	CERAMIC 0.022uF 10% 50V
C92	1-161-055-00	s	CERAMIC 0.022uF 10% 50V
C93	1-161-055-00	s	CERAMIC 0.022uF 10% 50V
C94	1-161-055-00	s	CERAMIC 0.022uF 10% 50V
C95	1-161-055-00	s	CERAMIC 0.022uF 10% 50V
C96	1-161-055-00	s	CERAMIC 0.022uF 10% 50V
C97	1-161-055-00	s	CERAMIC 0.022uF 10% 50V
C98	1-161-055-00	s	CERAMIC 0.022uF 10% 50V
C99	1-161-055-00	s	CERAMIC 0.022uF 10% 50V
C100	1-161-055-00	s	CERAMIC 0.022uF 10% 50V
C101	1-161-055-00	s	CERAMIC 0.022uF 10% 50V
C102	1-161-055-00	s	CERAMIC 0.022uF 10% 50V
C103	1-161-055-00	s	CERAMIC 0.022uF 10% 50V
C104	1-161-055-00	s	CERAMIC 0.022uF 10% 50V
C105	1-161-055-00	s	CERAMIC 0.022uF 10% 50V
C106	1-161-055-00	s	CERAMIC 0.022uF 10% 50V
C107	1-161-055-00	s	CERAMIC 0.022uF 10% 50V
C108	1-161-055-00	s	CERAMIC 0.022uF 10% 50V
C109	1-161-055-00	s	CERAMIC 0.022uF 10% 50V
C110	1-161-055-00	s	CERAMIC 0.022uF 10% 50V

NOTE: Please see page 8-9 for the parts that are not listed in the parts list.

(MY-54 BOARD)

Ref. No. or Q'ty	Part No.	SP	Description
C111	1-161-055-00	s	CERAMIC 0.022uF 10% 50V
C112	1-161-055-00	s	CERAMIC 0.022uF 10% 50V
C113	1-161-055-00	s	CERAMIC 0.022uF 10% 50V
C120	1-124-584-00	s	ELECT 100uF 20% 10V
C121	1-124-584-00	s	ELECT 100uF 20% 10V
C122	1-161-055-00	s	CERAMIC 0.022uF 10% 50V
C123	1-124-584-00	s	ELECT 100uF 20% 10V
C124	1-124-584-00	s	ELECT 100uF 20% 10V
C125	1-124-584-00	s	ELECT 100uF 20% 10V
C126	1-124-584-00	s	ELECT 100uF 20% 10V
C127	1-124-584-00	s	ELECT 100uF 20% 10V
CN7	1-506-748-11	o	CONNECTOR, DIN 96P, MALE
CN8	1-506-748-11	o	CONNECTOR, DIN 96P, MALE
CN9	1-506-748-11	o	CONNECTOR, DIN 96P, MALE
IC1	8-759-902-44	s	IC SN74LS244N
IC2	8-759-902-44	s	IC SN74LS244N
IC3	8-759-902-44	s	IC SN74LS244N
IC4	8-759-902-44	s	IC SN74LS244N
IC5	8-759-989-55	s	IC SN74ALS244BN
IC6	8-759-900-32	s	IC SN74LS32N
IC7	8-759-901-75	s	IC SN74LS175N
IC8	8-759-900-32	s	IC SN74LS32N
IC10	8-759-936-54	s	IC SN74ALS175N
IC11	8-759-900-04	s	IC SN74LS04N
IC12	8-759-936-54	s	IC SN74ALS175N
IC13	8-759-904-18	s	IC SN74ALS00AN
IC14	8-759-912-03	s	IC SN74ALS138N
IC15	8-759-912-03	s	IC SN74ALS138N
IC16	8-759-901-74	s	IC SN74LS174N
IC17	8-759-901-74	s	IC SN74LS174N
IC18	8-759-901-74	s	IC SN74LS174N
IC19	8-759-903-74	s	IC SN74LS374N
IC20	8-759-063-39	s	IC CXD8267Q
IC21	8-759-983-24	s	IC CXD8033Q
IC22	8-759-983-24	s	IC CXD8033Q
IC23	8-759-983-24	s	IC CXD8033Q
IC24	8-759-997-10	s	IC SN74ALS139N
IC25	8-759-515-08	s	IC SN74ALS374AN
IC26	8-759-900-00	s	IC SN74LS00N
IC27	8-759-900-32	s	IC SN74LS32N
IC28	8-759-900-74	s	IC SN74LS74AN
IC29	8-759-900-08	s	IC SN74LS08N
IC30	8-759-900-08	s	IC SN74LS08N
IC31	8-759-900-08	s	IC SN74LS08N
IC32	8-759-900-08	s	IC SN74LS08N
IC33	8-759-900-08	s	IC SN74LS08N
IC34	8-759-900-08	s	IC SN74LS08N
IC35	8-759-063-40	s	IC CXD8266Q
IC36	8-759-063-40	s	IC CXD8266Q
IC37	8-759-063-40	s	IC CXD8266Q
IC38	8-759-063-40	s	IC CXD8266Q
IC39	8-752-333-41	s	IC CXK54256P-35
IC40	8-752-333-41	s	IC CXK54256P-35
IC41	8-752-333-41	s	IC CXK54256P-35
IC42	8-752-333-41	s	IC CXK54256P-35
IC43	8-752-333-41	s	IC CXK54256P-35
IC44	8-752-333-41	s	IC CXK54256P-35
IC45	8-752-333-41	s	IC CXK54256P-35

(MY-54 BOARD)

Ref. No. or Q'ty	Part No.	SP	Description
IC46	8-752-333-41	s	IC CXK54256P-35
IC47	8-752-333-41	s	IC CXK54256P-35
IC48	8-752-333-41	s	IC CXK54256P-35
IC49	8-752-333-41	s	IC CXK54256P-35
IC50	8-752-333-41	s	IC CXK54256P-35
IC51	8-752-333-41	s	IC CXK54256P-35
IC52	8-752-333-41	s	IC CXK54256P-35
IC53	8-752-333-41	s	IC CXK54256P-35
IC54	8-752-333-41	s	IC CXK54256P-35
IC55	8-759-063-39	s	IC CXD8267Q
IC56	8-759-063-39	s	IC CXD8267Q
IC57	8-759-063-40	s	IC CXD8266Q
IC58	8-759-063-40	s	IC CXD8266Q
IC59	8-752-333-59	s	IC CXK58258SP-35
IC60	8-752-333-59	s	IC CXK58258SP-35
IC61	8-752-333-59	s	IC CXK58258SP-35
IC62	8-752-333-59	s	IC CXK58258SP-35
IC63	8-752-333-59	s	IC CXK58258SP-35
IC64	8-752-333-59	s	IC CXK58258SP-35
IC65	8-752-333-59	s	IC CXK58258SP-35
IC66	8-752-333-59	s	IC CXK58258SP-35
IC67	8-759-063-39	s	IC CXD8267Q
IC68	8-759-063-39	s	IC CXD8267Q
IC69	8-759-063-40	s	IC CXD8266Q
IC70	8-759-063-40	s	IC CXD8266Q
IC71	8-759-063-40	s	IC CXD8266Q
IC72	8-759-063-40	s	IC CXD8266Q
IC73	8-752-333-48	s	IC CXK5464AP-35
IC74	8-752-333-48	s	IC CXK5464AP-35
IC75	8-752-333-48	s	IC CXK5464AP-35
IC76	8-752-333-48	s	IC CXK5464AP-35
IC77	8-752-333-48	s	IC CXK5464AP-35
IC78	8-752-333-48	s	IC CXK5464AP-35
IC79	8-752-333-48	s	IC CXK5464AP-35
IC80	8-752-333-48	s	IC CXK5464AP-35
IC81	8-752-333-48	s	IC CXK5464AP-35
IC82	8-752-333-48	s	IC CXK5464AP-35
IC83	8-752-333-48	s	IC CXK5464AP-35
IC84	8-752-333-48	s	IC CXK5464AP-35
IC85	8-752-333-48	s	IC CXK5464AP-35
IC86	8-752-333-48	s	IC CXK5464AP-35
IC87	8-752-333-48	s	IC CXK5464AP-35
IC88	8-752-333-48	s	IC CXK5464AP-35
IC89	8-759-063-39	s	IC CXD8267Q
IC90	8-759-063-39	s	IC CXD8267Q
IC91	8-759-500-72	s	IC SN74ALS157AN
IC92	8-759-500-72	s	IC SN74ALS157AN
IC93	8-759-500-72	s	IC SN74ALS157AN
IC94	8-759-500-72	s	IC SN74ALS157AN
IC95	8-759-916-01	s	IC SN74ALS153N
IC96	8-759-903-74	s	IC SN74LS374N
IC97	8-759-903-74	s	IC SN74LS374N
IC98	8-759-063-41	s	IC CXD8265Q
IC99	8-759-063-41	s	IC CXD8265Q
IC100	8-759-063-41	s	IC CXD8265Q
IC101	8-759-063-41	s	IC CXD8265Q
IC102	8-759-904-79	s	IC 74F00PC
IC103	8-759-904-81	s	IC 74F08PC
IC104	8-759-946-64	s	IC SN74ALS04BN

NOTE: Please see page 8-9 for the parts that are not listed in the parts list.

(MY-54 BOARD)

Ref. No. or Q'ty	Part No.	SP	Description
IC105	8-759-946-64	s	IC SN74ALS04BN
IC106	8-759-500-72	s	IC SN74ALS157AN
IC107	8-759-903-74	s	IC SN74LS374N
IC108	8-759-901-75	s	IC SN74LS175N
IC109	8-759-903-97	s	IC SN74LS684N
IC110	8-759-936-53	s	IC SN74ALS151N
IC111	8-759-904-83	s	IC 74F32PC
IC112	8-759-904-83	s	IC 74F32PC
IC113	8-759-901-64	s	IC SN74LS164N
L1	1-412-525-31	s	INDUCTOR 10uH
PS1	⚠1-532-675-00	s	LINK, IC 1.5A
R1	1-249-441-11	s	CARBON 100K 5% 1/4W
R2	1-249-441-11	s	CARBON 100K 5% 1/4W
R3	1-249-441-11	s	CARBON 100K 5% 1/4W
R4	1-249-441-11	s	CARBON 100K 5% 1/4W
R5	1-249-441-11	s	CARBON 100K 5% 1/4W
R6	1-249-441-11	s	CARBON 100K 5% 1/4W
RB1	1-231-411-00	s	RESISTOR BLOCK 100Kx8
RB2	1-231-411-00	s	RESISTOR BLOCK 100Kx8
RB3	1-231-411-00	s	RESISTOR BLOCK 100Kx8
RB4	1-231-411-00	s	RESISTOR BLOCK 100Kx8
RB5	1-231-411-00	s	RESISTOR BLOCK 100Kx8
RB6	1-231-411-00	s	RESISTOR BLOCK 100Kx8
RB7	1-231-411-00	s	RESISTOR BLOCK 100Kx8
RB8	1-231-411-00	s	RESISTOR BLOCK 100Kx8
RB10	1-231-411-00	s	RESISTOR BLOCK 100Kx8
RB11	1-231-411-00	s	RESISTOR BLOCK 100Kx8
RB12	1-231-411-00	s	RESISTOR BLOCK 100Kx8

PU-78 BOARD

Ref. No. or Q'ty	Part No.	SP	Description
1pc	A-8271-683-A	o	MOUNTED CIRCUIT BOARD, PU-78
2pcs	3-166-184-01	o	LEVER, PC BOARD
2pcs	3-166-185-01	s	NUT, PLATE
1pc	3-178-157-01	o	PLATE, SHIELD
8pcs	4-886-821-11	s	SCREW, S TIGHT, +PTTWH 3X6
2pcs	7-622-207-05	s	N 2.6, TYPE 2
2pcs	7-626-320-11	s	PIN, SPRING 3X8
6pcs	7-628-254-40	s	SCREW +PS 2.6X12
C1	1-161-055-00	s	CERAMIC 0.022uF 10% 50V
C2	1-161-055-00	s	CERAMIC 0.022uF 10% 50V
C3	1-161-055-00	s	CERAMIC 0.022uF 10% 50V
C4	1-161-055-00	s	CERAMIC 0.022uF 10% 50V
C5	1-161-055-00	s	CERAMIC 0.022uF 10% 50V
C6	1-161-055-00	s	CERAMIC 0.022uF 10% 50V
C7	1-161-055-00	s	CERAMIC 0.022uF 10% 50V
C8	1-161-055-00	s	CERAMIC 0.022uF 10% 50V
C9	1-161-055-00	s	CERAMIC 0.022uF 10% 50V
C10	1-161-055-00	s	CERAMIC 0.022uF 10% 50V
C11	1-161-055-00	s	CERAMIC 0.022uF 10% 50V
C12	1-161-055-00	s	CERAMIC 0.022uF 10% 50V
C13	1-161-055-00	s	CERAMIC 0.022uF 10% 50V
C14	1-161-055-00	s	CERAMIC 0.022uF 10% 50V
C15	1-161-055-00	s	CERAMIC 0.022uF 10% 50V
C16	1-161-055-00	s	CERAMIC 0.022uF 10% 50V
C17	1-161-055-00	s	CERAMIC 0.022uF 10% 50V
C18	1-161-055-00	s	CERAMIC 0.022uF 10% 50V
C19	1-161-055-00	s	CERAMIC 0.022uF 10% 50V
C20	1-161-055-00	s	CERAMIC 0.022uF 10% 50V
C21	1-161-055-00	s	CERAMIC 0.022uF 10% 50V
C22	1-161-055-00	s	CERAMIC 0.022uF 10% 50V
C23	1-161-055-00	s	CERAMIC 0.022uF 10% 50V
C24	1-161-055-00	s	CERAMIC 0.022uF 10% 50V
C25	1-161-055-00	s	CERAMIC 0.022uF 10% 50V
C26	1-161-055-00	s	CERAMIC 0.022uF 10% 50V
C27	1-161-055-00	s	CERAMIC 0.022uF 10% 50V
C28	1-161-055-00	s	CERAMIC 0.022uF 10% 50V
C29	1-161-055-00	s	CERAMIC 0.022uF 10% 50V
C30	1-161-055-00	s	CERAMIC 0.022uF 10% 50V
C31	1-161-055-00	s	CERAMIC 0.022uF 10% 50V
C32	1-161-055-00	s	CERAMIC 0.022uF 10% 50V
C33	1-161-055-00	s	CERAMIC 0.022uF 10% 50V
C34	1-161-055-00	s	CERAMIC 0.022uF 10% 50V
C35	1-161-055-00	s	CERAMIC 0.022uF 10% 50V
C36	1-161-055-00	s	CERAMIC 0.022uF 10% 50V
C37	1-161-055-00	s	CERAMIC 0.022uF 10% 50V
C38	1-161-055-00	s	CERAMIC 0.022uF 10% 50V
C39	1-161-055-00	s	CERAMIC 0.022uF 10% 50V
C40	1-161-055-00	s	CERAMIC 0.022uF 10% 50V
C41	1-161-055-00	s	CERAMIC 0.022uF 10% 50V
C42	1-161-055-00	s	CERAMIC 0.022uF 10% 50V
C43	1-161-055-00	s	CERAMIC 0.022uF 10% 50V
C44	1-161-055-00	s	CERAMIC 0.022uF 10% 50V
C45	1-161-055-00	s	CERAMIC 0.022uF 10% 50V
C46	1-161-055-00	s	CERAMIC 0.022uF 10% 50V
C47	1-161-055-00	s	CERAMIC 0.022uF 10% 50V
C48	1-161-055-00	s	CERAMIC 0.022uF 10% 50V
C49	1-161-055-00	s	CERAMIC 0.022uF 10% 50V
C50	1-161-055-00	s	CERAMIC 0.022uF 10% 50V

NOTE: Please see page 8-9 for the parts that are not listed in the parts list.

(PU-78 BOARD)

Ref. No. or Q'ty	Part No.	SP	Description
C51	1-161-055-00	s	CERAMIC 0.022uF 10% 50V
C52	1-161-055-00	s	CERAMIC 0.022uF 10% 50V
C53	1-161-055-00	s	CERAMIC 0.022uF 10% 50V
C54	1-161-055-00	s	CERAMIC 0.022uF 10% 50V
C55	1-161-055-00	s	CERAMIC 0.022uF 10% 50V
C56	1-161-055-00	s	CERAMIC 0.022uF 10% 50V
C57	1-161-055-00	s	CERAMIC 0.022uF 10% 50V
C58	1-161-055-00	s	CERAMIC 0.022uF 10% 50V
C59	1-161-055-00	s	CERAMIC 0.022uF 10% 50V
C60	1-161-055-00	s	CERAMIC 0.022uF 10% 50V
C61	1-161-055-00	s	CERAMIC 0.022uF 10% 50V
C62	1-161-055-00	s	CERAMIC 0.022uF 10% 50V
C63	1-161-055-00	s	CERAMIC 0.022uF 10% 50V
C64	1-161-055-00	s	CERAMIC 0.022uF 10% 50V
C65	1-161-055-00	s	CERAMIC 0.022uF 10% 50V
C66	1-161-055-00	s	CERAMIC 0.022uF 10% 50V
C67	1-161-055-00	s	CERAMIC 0.022uF 10% 50V
C68	1-161-055-00	s	CERAMIC 0.022uF 10% 50V
C69	1-161-055-00	s	CERAMIC 0.022uF 10% 50V
C70	1-161-055-00	s	CERAMIC 0.022uF 10% 50V
C71	1-161-055-00	s	CERAMIC 0.022uF 10% 50V
C72	1-161-055-00	s	CERAMIC 0.022uF 10% 50V
C73	1-161-055-00	s	CERAMIC 0.022uF 10% 50V
C74	1-161-055-00	s	CERAMIC 0.022uF 10% 50V
C75	1-161-055-00	s	CERAMIC 0.022uF 10% 50V
C76	1-124-584-00	s	ELECT 100uF 20% 10V
C77	1-124-584-00	s	ELECT 100uF 20% 10V
C78	1-161-772-11	s	CERAMIC 0.1uF 10% 25V
C79	1-124-584-00	s	ELECT 100uF 20% 10V
C80	1-124-584-00	s	ELECT 100uF 20% 10V
C81	1-124-584-00	s	ELECT 100uF 20% 10V
C82	1-124-584-00	s	ELECT 100uF 20% 10V
C83	1-124-584-00	s	ELECT 100uF 20% 10V
C101	1-161-055-00	s	CERAMIC 0.022uF 10% 50V
C102	1-161-055-00	s	CERAMIC 0.022uF 10% 50V
C103	1-161-055-00	s	CERAMIC 0.022uF 10% 50V
C104	1-161-055-00	s	CERAMIC 0.022uF 10% 50V
CN10	1-506-748-11	o	CONNECTOR, DIN 96P, MALE
CN11	1-506-748-11	o	CONNECTOR, DIN 96P, MALE
CN12	1-506-748-11	o	CONNECTOR, DIN 96P, MALE
IC1	8-759-989-55	s	IC SN74ALS244BN
IC2	8-759-989-55	s	IC SN74ALS244BN
IC3	8-759-989-55	s	IC SN74ALS244BN
IC4	8-759-989-55	s	IC SN74ALS244BN
IC5	8-759-989-55	s	IC SN74ALS244BN
IC6	8-759-946-64	s	IC SN74ALS04BN
IC7	8-759-945-73	s	IC SN74ALS10AN
IC8	8-759-912-03	s	IC SN74ALS138N
IC9	8-759-912-03	s	IC SN74ALS138N
IC10	8-759-912-03	s	IC SN74ALS138N
IC11	8-759-904-38	s	IC SN74ALS32N
IC12	8-759-904-26	s	IC SN74ALS08N
IC13	8-759-500-72	s	IC SN74ALS157AN
IC14	8-759-515-08	s	IC SN74ALS374AN
IC15	8-759-900-69	s	IC SN74ALS74AN
IC16	8-759-900-69	s	IC SN74ALS74AN
IC17	8-759-983-24	s	IC CXD8033Q
IC18	8-759-063-42	s	IC CXD8264Q

(PU-78 BOARD)

Ref. No. or Q'ty	Part No.	SP	Description
IC19	8-759-989-55	s	IC SN74ALS244BN
IC20	8-759-989-55	s	IC SN74ALS244BN
IC21	8-759-989-55	s	IC SN74ALS244BN
IC22	8-759-989-55	s	IC SN74ALS244BN
IC23	8-752-322-06	s	IC CXK5814P-35
IC24	8-752-322-06	s	IC CXK5814P-35
IC25	8-759-983-25	s	IC CXD8031Q
IC26	8-759-983-25	s	IC CXD8031Q
IC27	8-759-983-25	s	IC CXD8031Q
IC28	8-759-983-25	s	IC CXD8031Q
IC29	8-759-989-55	s	IC SN74ALS244BN
IC30	8-759-989-55	s	IC SN74ALS244BN
IC31	8-759-989-55	s	IC SN74ALS244BN
IC32	8-752-322-06	s	IC CXK5814P-35
IC33	8-752-322-06	s	IC CXK5814P-35
IC34	8-759-989-55	s	IC SN74ALS244BN
IC35	8-759-989-55	s	IC SN74ALS244BN
IC36	8-759-989-55	s	IC SN74ALS244BN
IC37	8-759-989-55	s	IC SN74ALS244BN
IC38	8-759-989-55	s	IC SN74ALS244BN
IC39	8-759-989-55	s	IC SN74ALS244BN
IC40	8-752-324-60	s	IC CXK5863P-25
IC41	8-752-324-60	s	IC CXK5863P-25
IC42	8-752-324-60	s	IC CXK5863P-25
IC43	8-752-324-60	s	IC CXK5863P-25
IC44	8-759-989-55	s	IC SN74ALS244BN
IC45	8-759-989-55	s	IC SN74ALS244BN
IC46	8-759-989-55	s	IC SN74ALS244BN
IC47	8-759-989-55	s	IC SN74ALS244BN
IC48	8-759-500-72	s	IC SN74ALS157AN
IC49	8-759-500-72	s	IC SN74ALS157AN
IC50	8-759-500-72	s	IC SN74ALS157AN
IC51	8-759-500-72	s	IC SN74ALS157AN
IC52	8-759-901-64	s	IC SN74LS164N
IC53	8-759-904-38	s	IC SN74ALS32N
IC54	8-759-904-38	s	IC SN74ALS32N
IC55	8-759-505-01	s	IC CXD8054
IC56	8-759-505-01	s	IC CXD8054
IC57	8-759-063-44	s	IC CXD8262Q
IC58	8-759-063-44	s	IC CXD8262Q
IC59	8-759-063-44	s	IC CXD8262Q
IC60	8-759-063-44	s	IC CXD8262Q
IC61	8-759-088-19	o	IC PAL16L8-NPPSL61V1.01, PLD
IC62	8-759-904-38	s	IC SN74ALS32N
IC63	8-759-904-38	s	IC SN74ALS32N
IC64	8-759-906-78	s	IC 74F399PC
IC65	8-759-500-72	s	IC SN74ALS157AN
IC66	8-759-500-72	s	IC SN74ALS157AN
IC67	8-759-515-08	s	IC SN74ALS374AN
IC68	8-759-063-39	s	IC CXD8267Q
IC69	8-759-906-78	s	IC 74F399PC
IC70	8-759-063-39	s	IC CXD8267Q
IC71	8-759-906-78	s	IC 74F399PC
IC72	8-759-063-39	s	IC CXD8267Q
IC73	8-759-906-78	s	IC 74F399PC
IC74	8-759-063-39	s	IC CXD8267Q
IC75	8-759-906-78	s	IC 74F399PC
IC101	8-759-901-64	s	IC SN74LS164N
IC102	8-759-901-64	s	IC SN74LS164N

NOTE: Please see page 8-9 for the parts that are not listed in the parts list.

(PU-78 BOARD)

Ref. No. or Q'ty	Part No.	SP	Description
IC103	8-759-901-64	s	IC SN74LS164N
IC104	8-759-904-38	s	IC SN74ALS32N
L1	1-412-525-31	s	INDUCTOR 10uH
PS1	⚠1-532-675-00	s	LINK, IC 1.5A
RB1	1-231-410-00	s	RESISTOR BLOCK 10Kx8
RB2	1-231-410-00	s	RESISTOR BLOCK 10Kx8
RB3	1-231-410-00	s	RESISTOR BLOCK 10Kx8
S1	1-554-080-00	s	SWITCH, DIGITAL
S2	1-554-080-00	s	SWITCH, DIGITAL

SY-172/SY-172P BOARD

Ref. No. or Q'ty	Part No.	SP	Description
1pc	A-8271-682-A	o	MOUNTED CIRCUIT BOARD, SY-172 (for DFS-500)
1pc	A-8271-695-A	o	MOUNTED CIRCUIT BOARD, SY-172P (for DFS-500P)
2pcs	3-166-184-01	o	LEVER, PC BOARD
1pc	3-178-157-01	o	PLATE, SHIELD
8pcs	4-886-821-11	s	SCREW, S TIGHT, +PTTWH 3X6
4pcs	7-622-207-05	s	N 2.6, TYPE 2
2pcs	7-626-320-11	s	PIN, SPRING 3X8
4pcs	7-628-254-40	s	SCREW +PS 2.6X12
BT1	1-528-202-11	s	BATTERY, NICKEL-CADMIUM
C1	1-161-055-00	s	CERAMIC 0.022uF 10% 50V
C2	1-161-055-00	s	CERAMIC 0.022uF 10% 50V
C3	1-161-055-00	s	CERAMIC 0.022uF 10% 50V
C4	1-161-055-00	s	CERAMIC 0.022uF 10% 50V
C5	1-161-055-00	s	CERAMIC 0.022uF 10% 50V
C6	1-161-055-00	s	CERAMIC 0.022uF 10% 50V
C7	1-161-055-00	s	CERAMIC 0.022uF 10% 50V
C8	1-161-055-00	s	CERAMIC 0.022uF 10% 50V
C9	1-161-055-00	s	CERAMIC 0.022uF 10% 50V
C10	1-161-055-00	s	CERAMIC 0.022uF 10% 50V
C11	1-161-055-00	s	CERAMIC 0.022uF 10% 50V
C12	1-161-055-00	s	CERAMIC 0.022uF 10% 50V
C13	1-161-055-00	s	CERAMIC 0.022uF 10% 50V
C14	1-161-055-00	s	CERAMIC 0.022uF 10% 50V
C15	1-161-055-00	s	CERAMIC 0.022uF 10% 50V
C16	1-161-055-00	s	CERAMIC 0.022uF 10% 50V
C17	1-161-055-00	s	CERAMIC 0.022uF 10% 50V
C18	1-161-055-00	s	CERAMIC 0.022uF 10% 50V
C19	1-161-055-00	s	CERAMIC 0.022uF 10% 50V
C20	1-161-055-00	s	CERAMIC 0.022uF 10% 50V
C21	1-161-055-00	s	CERAMIC 0.022uF 10% 50V
C22	1-161-055-00	s	CERAMIC 0.022uF 10% 50V
C23	1-161-055-00	s	CERAMIC 0.022uF 10% 50V
C24	1-161-055-00	s	CERAMIC 0.022uF 10% 50V
C25	1-161-055-00	s	CERAMIC 0.022uF 10% 50V
C26	1-161-055-00	s	CERAMIC 0.022uF 10% 50V
C27	1-161-055-00	s	CERAMIC 0.022uF 10% 50V
C28	1-161-055-00	s	CERAMIC 0.022uF 10% 50V
C29	1-161-055-00	s	CERAMIC 0.022uF 10% 50V
C30	1-161-055-00	s	CERAMIC 0.022uF 10% 50V
C31	1-161-055-00	s	CERAMIC 0.022uF 10% 50V
C32	1-161-055-00	s	CERAMIC 0.022uF 10% 50V
C33	1-161-055-00	s	CERAMIC 0.022uF 10% 50V
C34	1-161-055-00	s	CERAMIC 0.022uF 10% 50V
C35	1-161-055-00	s	CERAMIC 0.022uF 10% 50V
C36	1-161-055-00	s	CERAMIC 0.022uF 10% 50V
C37	1-161-055-00	s	CERAMIC 0.022uF 10% 50V
C38	1-161-055-00	s	CERAMIC 0.022uF 10% 50V
C39	1-161-055-00	s	CERAMIC 0.022uF 10% 50V
C40	1-161-055-00	s	CERAMIC 0.022uF 10% 50V
C41	1-161-055-00	s	CERAMIC 0.022uF 10% 50V
C42	1-161-055-00	s	CERAMIC 0.022uF 10% 50V
C43	1-161-055-00	s	CERAMIC 0.022uF 10% 50V
C44	1-161-055-00	s	CERAMIC 0.022uF 10% 50V
C45	1-161-055-00	s	CERAMIC 0.022uF 10% 50V
C46	1-161-055-00	s	CERAMIC 0.022uF 10% 50V

NOTE: Please see page 8-9 for the parts that are not listed in the parts list.

(SY-172/SY-172P BOARD)

Ref. No. or Q'ty	Part No.	SP	Description
C47	1-161-055-00	s	CERAMIC 0.022uF 10% 50V
C48	1-161-055-00	s	CERAMIC 0.022uF 10% 50V
C49	1-161-055-00	s	CERAMIC 0.022uF 10% 50V
C50	1-161-055-00	s	CERAMIC 0.022uF 10% 50V
C51	1-161-055-00	s	CERAMIC 0.022uF 10% 50V
C52	1-161-055-00	s	CERAMIC 0.022uF 10% 50V
C53	1-161-055-00	s	CERAMIC 0.022uF 10% 50V
C54	1-161-055-00	s	CERAMIC 0.022uF 10% 50V
C55	1-161-055-00	s	CERAMIC 0.022uF 10% 50V
C56	1-161-055-00	s	CERAMIC 0.022uF 10% 50V
C57	1-161-055-00	s	CERAMIC 0.022uF 10% 50V
C58	1-161-055-00	s	CERAMIC 0.022uF 10% 50V
C59	1-161-055-00	s	CERAMIC 0.022uF 10% 50V
C60	1-161-055-00	s	CERAMIC 0.022uF 10% 50V
C61	1-161-772-11	s	CERAMIC 0.1uF 10% 25V
C62	1-161-055-00	s	CERAMIC 0.022uF 10% 50V
C63	1-161-772-11	s	CERAMIC 0.1uF 10% 25V
C64	1-161-055-00	s	CERAMIC 0.022uF 10% 50V
C65	1-124-584-00	s	ELECT 100uF 20% 10V
C66	1-161-055-00	s	CERAMIC 0.022uF 10% 50V
C67	1-124-584-00	s	ELECT 100uF 20% 10V
C68	1-124-584-00	s	ELECT 100uF 20% 10V
C69	1-124-584-00	s	ELECT 100uF 20% 10V
C70	1-124-584-00	s	ELECT 100uF 20% 10V
C71	1-124-584-00	s	ELECT 100uF 20% 10V
C72	1-124-584-00	s	ELECT 100uF 20% 10V
C73	1-161-055-00	s	CERAMIC 0.022uF 10% 50V
CN16	1-506-748-11	o	CONNECTOR, DIN 96P, MALE
CN18	1-506-748-11	o	CONNECTOR, DIN 96P, MALE
CNI1	1-526-659-00	o	SOCKET, IC 28P
CNI2	1-526-659-00	o	SOCKET, IC 28P
CNI3	1-526-659-00	o	SOCKET, IC 28P
CNI4	1-526-659-00	o	SOCKET, IC 28P
CNI5	1-526-660-21	o	SOCKET, IC 32P
CNI6	1-526-660-21	o	SOCKET, IC 32P
CNI7	1-526-660-21	o	SOCKET, IC 32P
CNI8	1-526-660-21	o	SOCKET, IC 32P
D1	8-719-911-19	s	DIODE 1SS119
IC1	8-759-088-11	o	IC 27C256-NPSYS1V1.01, EPROM
IC2	8-759-088-12	o	IC 27C256-NPSYS2V1.01, EPROM
IC3	8-759-088-13	o	IC 27C512-NPSYS3V1.01, EPROM
IC4	8-759-088-14	o	IC 27C512-NPSYS4V1.01, EPROM
IC5	8-759-088-15	o	IC 27C4001-NTEFC5V1.01, EPROM (for UC)
	8-759-093-64	o	IC 27C4001-PLEFC5V3.01, EPROM (for EK)
IC6	8-759-088-16	o	IC 27C4001-NTEFC6V1.01, EPROM (for UC)
	8-759-093-65	o	IC 27C4001-PLEFC6V3.01, EPROM (for EK)
IC7	8-759-088-17	o	IC 27C4001-NTEFC7V1.01, EPROM (for UC)
	8-759-093-66	o	IC 27C4001-PLEFC7V3.01, EPROM (for EK)
IC8	8-759-088-18	o	IC 27C4001-NTEFC8V1.01, EPROM (for UC)
	8-759-093-67	o	IC 27C4001-PLEFC8V3.01, EPROM (for EK)

NOTE: Please see page 8-9 for the parts that are not listed in the parts list.

(SY-172/SY-172P BOARD)

Ref. No. or Q'ty	Part No.	SP	Description
IC9	8-752-803-58	s	IC CXQ70116P-10
IC10	8-759-902-45	s	IC SN74LS245N
IC11	8-759-902-45	s	IC SN74LS245N
IC12	8-759-903-75	s	IC SN74LS375N
IC13	8-759-903-73	s	IC SN74LS373N
IC14	8-759-903-73	s	IC SN74LS373N
IC15	8-759-900-10	s	IC SN74LS10N
IC16	8-759-502-77	s	IC SN74LS139AN
IC17	8-759-900-32	s	IC SN74LS32N
IC18	8-759-900-20	s	IC SN74LS20N
IC19	8-759-901-38	s	IC SN74LS138N
IC20	8-759-901-38	s	IC SN74LS138N
IC21	8-759-901-38	s	IC SN74LS138N
IC22	8-759-900-21	s	IC SN74LS21N
IC23	8-752-328-05	s	IC CXK5864BSP-70L
IC24	8-752-328-05	s	IC CXK5864BSP-70L
IC25	8-759-902-44	s	IC SN74LS244N
IC26	8-759-903-74	s	IC SN74LS374N
IC27	8-759-903-74	s	IC SN74LS374N
IC28	8-759-900-74	s	IC SN74LS74AN
IC29	8-759-903-74	s	IC SN74LS374N
IC30	8-759-903-74	s	IC SN74LS374N
IC31	8-759-903-74	s	IC SN74LS374N
IC32	8-759-903-74	s	IC SN74LS374N
IC33	8-759-903-74	s	IC SN74LS374N
IC34	8-759-902-44	s	IC SN74LS244N
IC35	8-759-902-44	s	IC SN74LS244N
IC36	8-759-902-44	s	IC SN74LS244N
IC37	8-759-902-44	s	IC SN74LS244N
IC38	8-759-902-44	s	IC SN74LS244N
IC39	8-759-902-44	s	IC SN74LS244N
IC40	8-752-803-58	s	IC CXQ70116P-10
IC41	8-759-902-45	s	IC SN74LS245N
IC42	8-759-902-45	s	IC SN74LS245N
IC43	8-759-903-75	s	IC SN74LS375N
IC44	8-759-903-73	s	IC SN74LS373N
IC45	8-759-903-73	s	IC SN74LS373N
IC46	8-759-901-38	s	IC SN74LS138N
IC47	8-759-901-38	s	IC SN74LS138N
IC48	8-759-901-38	s	IC SN74LS138N
IC49	8-759-900-20	s	IC SN74LS20N
IC50	8-759-900-32	s	IC SN74LS32N
IC51	8-752-806-91	s	IC CXQ71054P
IC52	8-759-105-76	s	IC UPD71059C
IC53	8-759-107-51	s	IC CXQ71051P
IC54	8-759-107-51	s	IC CXQ71051P
IC55	8-759-902-44	s	IC SN74LS244N
IC56	8-759-902-44	s	IC SN74LS244N
IC57	8-759-926-32	s	IC AM26LS32PC
IC58	8-759-926-31	s	IC AM26LS31PC
IC59	8-752-328-05	s	IC CXK5864BSP-70L
IC60	8-752-328-05	s	IC CXK5864BSP-70L
IC61	8-752-328-05	s	IC CXK5864BSP-70L
IC62	8-752-328-05	s	IC CXK5864BSP-70L
IC63	8-759-505-28	s	IC MAX691CPE
IC64	8-759-902-44	s	IC SN74LS244N
L1	1-412-525-31	s	INDUCTOR 10uH

(SY-172/SY-172P BOARD)

Ref. No. or Q'ty	Part No.	SP	Description
PS1	⚠1-532-675-00	s	LINK, IC 1.5A
Q1	8-729-195-23	s	TRANSISTOR 2SA952
R1	1-249-429-11	s	CARBON 10K 5% 1/4W
R2	1-249-419-11	s	CARBON 1.5K 5% 1/4W
R3	1-249-405-11	s	CARBON 100 5% 1/4W
R4	1-249-419-11	s	CARBON 1.5K 5% 1/4W
R5	1-249-419-11	s	CARBON 1.5K 5% 1/4W
R6	1-249-405-11	s	CARBON 100 5% 1/4W
R7	1-249-419-11	s	CARBON 1.5K 5% 1/4W
R8	1-249-411-11	s	CARBON 330 5% 1/4W
RB1	1-235-351-11	s	RESISTOR BLOCK 2.2Kx4
RB2	1-235-351-11	s	RESISTOR BLOCK 2.2Kx4
RB3	1-231-410-00	s	RESISTOR BLOCK 10Kx8
RB4	1-231-410-00	s	RESISTOR BLOCK 10Kx8
S1	1-570-674-11	s	SWITCH, SLIDE
S2	1-554-027-00	s	SWITCH, DIGITAL
S3	1-570-598-11	s	SWITCH, DIP 4-CKT
X1	1-577-337-11	s	OSC, CRYSTAL 10.00 MHz
X2	1-577-255-11	s	OSC, CRYSTAL 8.00 MHz

VR-135 BOARD

Ref. No. or Q'ty	Part No.	SP	Description
3pcs	1-644-610-11	o	PRINTED CIRCUIT BOARD, VR-135
C1	1-124-589-11	s	ELECT 47uF 20% 16V
C2	1-161-485-00	s	CERAMIC 0.1uF 50V
C4	1-161-485-00	s	CERAMIC 0.1uF 50V
C5	1-161-485-00	s	CERAMIC 0.1uF 50V
CN1	1-506-483-21	s	CONNECTOR, 4P, MALE
RV1	1-223-247-11	s	RES, VAR CARBON 10Kx2

VR-136 BOARD

Ref. No. or Q'ty	Part No.	SP	Description
1pc	1-644-611-11	o	PRINTED CIRCUIT BOARD, VR-136
C1	1-124-589-11	s	ELECT 47uF 20% 16V
C2	1-161-485-00	s	CERAMIC 0.1uF 50V
C3	1-161-485-00	s	CERAMIC 0.1uF 50V
C4	1-161-485-00	s	CERAMIC 0.1uF 50V
C5	1-161-485-00	s	CERAMIC 0.1uF 50V
C6	1-161-485-00	s	CERAMIC 0.1uF 50V
RV1	1-223-247-11	s	RES, VAR CARBON 10Kx2
RV2	1-223-247-11	s	RES, VAR CARBON 10Kx2
CN1	1-506-489-11	s	CONNECTOR 10P, MALE

VR-137 BOARD

Ref. No. or Q'ty	Part No.	SP	Description
1pc	1-644-612-11	o	PRINTED CIRCUIT BOARD, VR-137
C1	1-124-589-11	s	ELECT 47uF 20% 16V
C2	1-161-485-00	s	CERAMIC 0.1uF 50V
C3	1-161-485-00	s	CERAMIC 0.1uF 50V
C4	1-161-485-00	s	CERAMIC 0.1uF 50V
C5	1-161-485-00	s	CERAMIC 0.1uF 50V
C6	1-161-485-00	s	CERAMIC 0.1uF 50V
C7	1-161-485-00	s	CERAMIC 0.1uF 50V
C8	1-161-485-00	s	CERAMIC 0.1uF 50V
C9	1-161-485-00	s	CERAMIC 0.1uF 50V
C10	1-161-485-00	s	CERAMIC 0.1uF 50V
C11	1-161-485-00	s	CERAMIC 0.1uF 50V
CN1	1-506-489-11	s	CONNECTOR 10P, MALE
RV1	1-223-247-11	s	RES, VAR CARBON 10Kx2
RV2	1-223-247-11	s	RES, VAR CARBON 10Kx2
RV3	1-223-247-11	s	RES, VAR CARBON 10Kx2

NOTE: Please see page 8-9 for the parts that are not listed in the parts list.

VR-138 BOARD

Ref. No. or Q'ty	Part No.	SP	Description
1pc	1-644-613-11	o	PRINTED CIRCUIT BOARD, VR-138
C1	1-124-589-11	s	ELECT 47uF 20% 16V
C2	1-161-485-00	s	CERAMIC 0.1uF 50V
C3	1-161-485-00	s	CERAMIC 0.1uF 50V
C4	1-161-485-00	s	CERAMIC 0.1uF 50V
C5	1-161-485-00	s	CERAMIC 0.1uF 50V
C6	1-161-485-00	s	CERAMIC 0.1uF 50V
C7	1-161-485-00	s	CERAMIC 0.1uF 50V
C8	1-161-485-00	s	CERAMIC 0.1uF 50V
C9	1-161-485-00	s	CERAMIC 0.1uF 50V
C10	1-161-485-00	s	CERAMIC 0.1uF 50V
C11	1-161-485-00	s	CERAMIC 0.1uF 50V
C12	1-161-485-00	s	CERAMIC 0.1uF 50V
C13	1-161-485-00	s	CERAMIC 0.1uF 50V
C14	1-161-485-00	s	CERAMIC 0.1uF 50V
CN1	1-506-489-11	s	CONNECTOR 10P, MALE
RV1	1-223-247-11	s	RES, VAR CARBON 10Kx2
RV2	1-223-247-11	s	RES, VAR CARBON 10Kx2
RV3	1-223-247-11	s	RES, VAR CARBON 10Kx2
RV4	1-223-247-11	s	RES, VAR CARBON 10Kx2

FRAME

Ref. No. or Q'ty	Part No.	SP	Description
M1	1-541-329-31	s	MOTOR, FAN
S101	⚠1-570-117-41	s	SWITCH, ROCKER (AC POWER)
1pc	⚠1-413-776-11	s	REGULATOR, SWITCHING SSOG1213
1pc	⚠1-413-776-21	s	REGULATOR, SWITCHING
1pc	1-466-182-11	s	ENCODER, ROTARY (MAGNETIC)
1pc	1-574-992-11	s	CABLE, FLAT 25P ("CONTROL PANEL" to CN1/KY-223 board)
1pc	⚠1-580-375-11	s	INLET, AC 3P, MALE
1pc	⚠1-950-804-11	o	HARNESS (ACW-500)
1pc	⚠1-950-974-11	o	HARNESS (ACW-500PB)
1pc	⚠1-950-975-11	o	HARNESS (ACW-500PA)
1pc	1-951-147-11	o	HARNESS (KY-4)

HARNESS'S CHILD PARTS

HARNESS KY-1:
(CN1F/KY-226 board to CN4F/KY-225 board)
(CN1F/VR-135 board to CN6F/KY-225 board)
(CN1F/VR-135 board to CN5F/KY-223 board)
(CN1F/VR-135 board to CN6F/KY-223 board)
Unstock parts

HARNESS KY-2:
(CN1F/VR-136 board to CN5F/KY-225 board)
(CN1F/VR-137 board to CN7F/KY-223 board)
(CN1F/VR-138 board to CN8F/KY-223 board)
Unstock parts

HARNESS KY-3:
(CN1F/KY-225 board to CN2F/KY-223 board)
(CN2F/KY-225 board to CN3F/KY-223 board)
(CN3F/KY-225 board to CN4F/KY-223 board)
Unstock parts

HARNESS KY-4:
(KY-223 board to KY-225 board)
1pc ⚠1-535-340-11 o CONTACT

HARNESS DCW-500:
(CN1/LE-55B board to CN22/MB-385 board)

CN1F	1-569-196-31	o	HOUSING 3P
	1-569-193-11	o	CONTACT, FEMALE
CN22F	1-569-196-11	o	HOUSING, CONNECTOR 3P
	1-569-193-11	o	CONTACT, FEMALE

(CN4/POWER SUPPLY to CN25/MB-385 board)

CN4F	1-562-821-11	o	HOUSING, 6P
	⚠1-560-764-21	o	CONTACT, FEMALE AWG18-24
CN25F	⚠1-562-286-11	o	HOUSING, 5P
	⚠1-562-210-11	o	CONTACT, FEMALE AWG18-22

(CN5/POWER SUPPLY to CN24/MB-385 board)

CN5F	1-562-819-11	o	HOUSING, 4P
	⚠1-560-764-21	o	CONTACT, FEMALE AWG18-24
CN24F	1-562-285-11	o	HOUSING, CONNECTOR 4P
	⚠1-562-210-11	o	CONTACT, FEMALE AWG18-22

NOTE: Please see page 8-9 for the parts that are not listed in the parts list.

(FRAME)

Ref. No. or Q'ty	Part No.	SP	Description
(CN6/POWER SUPPLY to CN23/MB-385 board)			
CN6F	1-562-819-11	o	HOUSING, 4P
	⚠1-560-764-21	o	CONTACT, FEMALE AWG18-24
CN23F	1-562-285-11	o	HOUSING, CONNECTOR 4P
	⚠1-562-210-11	o	CONTACT, FEMALE AWG18-22
HARNESS ACW-500 (for J, UC):			
(CN1/POWER SUPPLY to SEESAW SW S101)			
CN1F	⚠1-562-820-11	o	HOUSING, 5P
	⚠1-560-764-21	o	CONTACT, FEMALE AWG18-24
1pc	⚠1-570-117-41	s	SWITCH, ROCKER (AC POWER)
1pc	4-378-341-01	o	COVER, SWITCH
(SEESAW SW S101 to INLET 3P)			
(INLET 3P to WIRE GROUND)			
1pc	1-535-316-11	s	TERMINAL, GROUND (M4)
1pc	⚠1-580-375-11	s	INLET, AC 3P, MALE
1pc	4-601-466-11	o	COVER, 3P INLET
HARNESS ACW-500PA (for EK):			
(CN1F/AC-111B board to INLET 3P)			
CN1F	⚠1-562-211-11	o	HOUSING 3P
1pc	⚠1-562-210-11	o	CONTACT, FEMALE AWG18-22
1pc	⚠1-580-375-11	s	INLET, AC 3P, MALE
1pc	4-601-466-11	o	COVER, 3P INLET
(INLET 3P to WIRE GROUND)			
1pc	1-535-316-11	s	TERMINAL, GROUND (M4)
HARNESS ACW-500PB (for EK):			
(CN1/AC-111B board to SEESAW SW S101)			
CN1F	⚠1-562-820-11	o	HOUSING, 5P
	⚠1-560-764-21	o	CONTACT, FEMALE AWG18-24
1pc	⚠1-570-117-41	s	SWITCH, ROCKER (AC POWER)
1pc	4-378-341-01	o	COVER, SWITCH
(CN2F/AC-111B board to SEESAW SW S101)			
CN2F	⚠1-562-286-11	o	HOUSING, 5P
	⚠1-562-210-11	o	CONTACT, FEMALE AWG18-22
(CN2F/AC-111B board to WIRE GROUND)			
1pc	⚠1-535-340-11	o	CONTACT

PACKING MATERIALS & SUPPLIED ACCESSORIES

Ref. No. or Q'ty	Part No.	SP	Description
1pc	⚠1-534-754-00	s	CORD POWER, 2P (for J)
1pc	⚠1-557-377-11	s	CORD, POWER (for UC)
1pc	⚠1-590-910-11	s	CORD, POWER 3P (for EK)
1pc	1-696-660-11	o	CABLE, D-SUB 25P(DIGITAL VIDEO)10m
1pc	2-990-242-01	s	HOLDER (B), PLUG (for J, UC)
1pc	3-170-078-01	o	HOLDER (B), PLUG (for EK)
1pc	3-177-560-01	o	CHIP (B), SW
1pc	3-178-159-01	o	INDIVIDUAL CARTON (for J, UC)
1pc	3-178-171-01	o	CUSHION (INNER)
1pc	3-178-172-01	o	CUSHION (UPPER)
1pc	3-178-174-01	o	CUSHION
1pc	3-178-513-01	o	INDIVIDUAL CARTON (for EK)
1pc	3-701-634-00	o	BAG, POLYETHYLENE
1pc	3-755-938-01	s	MANUAL, INSTRUCTION (for J)
1pc	⚠3-755-938-21	s	MANUAL, INSTRUCTION (for UC, EK)
1pc	3-755-938-31	s	MANUAL, INSTRUCTION (for UC, EK)
1pc	3-755-938-41	s	MANUAL, INSTRUCTION (for EK)

8-4. OPTIONAL FIXTURES

OPTIONAL FIXTURES

J-6035-070-A	o	PLCC IC EXTRACTION TOOL	
J-6186-940-A	o	EXTENSION BOARD EX-326	
J-6031-820-A	o	MULTI CONNECTOR CABLE (DIBNC)	
J-6081-830-A	o	MULTI CONNECTOR CABLE (DOBNC)	
J-6381-380-A	o	VIDEO CABLE (S-BNC)	
1-575-065-11	o	25-PIN CONTROL CABLE (5m)	

Standard
Product SOPT HEATER HS-600 (100V)
(117V)
(220V)
(240V)
NOZZLE HS-616 (for HS-600)
HS-619 (for HS-600)

NOTE: Please see page 8-9 for the parts that are not listed in the parts list.